CITY OF ABERDEEN

Harford County, Maryland

PROJECT MANUAL

FOR

DEPARTMENT OF PUBLIC WORKS

ABERDEEN WATERMAIN EXTENSION
CONTRACT NO. 21-12

Engineer's Project No. 11201446

August 2021

GHD Inc.
1240 North Mountain Road
Harrisburg, PA 17112
(717) 541-0622

TABLE OF CONTENTS

TITLE	PAGE NO.
BIDDING REQUIREMENTS	
INVITATION TO BID	00010–1
INSTRUCTIONS TO BIDDERS	00100–1
BIDDING FORMS	
BID FORM	00300–1
BID BOND	00350–1
EXPERIENCE QUESTIONNAIRE	00400–1
LIST OF PROPOSED SUBCONTRACTORS	00450–1
CONTRACT FORMS	
AGREEMENT	00500–1
PERFORMANCE BOND	00610–1
PAYMENT BOND	00620–1
STANDARD GENERAL CONDITIONS OF THE CONSTRUCTION CONTRACT	00700-1
SUPPLEMENTARY CONDITIONS – MODIFICATIONS TO GENERAL CONDITIONS	00800-1
- GEOTECHNICAL EXPLORATION REPORT TITLED "RAILBIRD ALLEY WATER BOOSTER PUMP STATION"	
HARFORD COUNTY STANDARD SPECIFICATIONS AND DETAILS FOR WATER AND SEWER MAINS (418 pages)	
APPROVED LIST OF SUPPLIERS AND MATERIALS FOR WATER AND SEWER CONSTRUCTION (27 pages)	
SUPPLEMENTAL SPECIFICATIONS – MODIFICATIONS TO HARFORD COUNTY STANDARD SPECIFICATIONS AND DETAILS FOR WATER AND SEWER MAINS (41 pages)	
DRAWINGS titled *ABERDEEN WATERMAIN EXTENSION* (14 sheets)	

DOCUMENT 00010

INVITATION TO BID

Project: **ABERDEEN WATERMAIN EXTENSION - CONTRACT NO. 21-12:** Project generally comprises all materials, labor, and equipment necessary for the installation of approximately 5,450 linear feet of mostly 12" PVC watermain, gate valves, fire hydrants, and other appurtenances along Route 40 and Beards Hill Road, and restoration to areas disturbed by construction operations.

The Work will be performed under one Contract as follows:

General Construction.

Owner: **CITY OF ABERDEEN**
60 North Parke Street
P.O. Box 70
Aberdeen, MD 21001

Engineer: **GHD, INC.**
1240 North Mountain Road
Harrisburg, PA 17112
Telephone: 717-541-0622
Fax: 717-441-0161

Sealed Bids will be received by the Owner at the address shown above until 2:00 P.M., prevailing time, September 30, 2021, at which time they will be publicly opened and read. Bidding documents are available online free of charge at HTTPS://Aberdeenmd.gov/bids. Online registration is required. Please contact Shawn Brogan, Procurement Officer at 410-272-1600 x 223 for further information.

Envelopes containing the bid shall be sealed and addressed to Shawn Brogan, at City Hall, address shown above, and shall be clearly and distinctly marked to say **"Aberdeen Watermain Extension – Bid No. 21-12".**

A pre-bid meeting will be held at 10:00 AM, prevailing time, September 15, 2021 at the office of the Owner. **Attendance at the pre-bid meeting is mandatory.** Bids from parties not present at the meeting and site visit will not be accepted.

Technical questions shall be directed, by e-mail only, to Chad Angle, PE at Chad.Angle@ghd.com at the office of the Engineer.

Questions will be accepted until 4:00 PM prevailing time, September 24, 2021. Questions received after this date will not be addressed.

Reproduction of the Bidding Documents, or their placement on web sites of prospective bidders and other entities, is not permitted.

Bids from prospective Bidders who have not obtained complete sets of Bidding Documents, only from the City of Aberdeen, will not be accepted.

It is a requirement of this Contract that Bidders shall have a minimum (5) year, (5) project documented experience in the type of Work required by this Project. The cost of each project included in each Bidder's questionnaire must be in excess of $250,000 in order to be considered project experience.

Bids may be modified or withdrawn by an appropriate document duly executed (in the manner that a Bid must be executed) and delivered to the place where Bids are to be submitted at any time prior to the opening of Bids.

Bids shall remain open for a period of 60 days from the date of Bid opening. See Instructions to Bidders for other provisions on the time available for acceptance of Bids.

Each Bid must be accompanied by Bid security in the form of a certified check, bank check, irrevocable letter of credit, or Bid bond (on the form included with the Bidding Documents) for five percent (5%) of the Bid total.

The **CITY OF ABERDEEN** hereby reserves the right, which is understood and agreed to by all Bidders, to reject any or all Bids and to waive any omissions, errors, or irregularities in any Bid.

CITY OF ABERDEEN

SHAWN BROGAN, PROCUREMENT OFFICER

DOCUMENT 00100

INSTRUCTIONS TO BIDDERS

Article 1 - Defined Terms

1.01 Terms used in these *Instructions to Bidders,* which are defined in the Standard General Conditions of the Construction Contract, as prepared by the Engineer's Joint Contract Documents Committee (Document EJCDC C – 700, 2013 Edition), have the meanings assigned to them in the General Conditions. Additional terms used in these *Instructions to Bidders* have meanings indicated below, which are applicable to both the singular and plural thereof.

A. Issuing Office – The office from which the Bidding Documents are to be issued and made available for sale, and where the bidding procedures are to be administered.

1. Issuing Office is the office of the Owner whose name, address and phone number are listed in the Invitation to Bid.

B. Successful Bidder – The lowest, responsible and responsive Bidder to whom Owner (on the basis of Owner's evaluation as hereinafter provided) makes an award.

Article 2 - Copies of Bidding Documents

2.01 Complete sets of the Bidding Documents in the number and for the deposit sum, if any, stated in the Invitation to Bid may only be obtained from the Issuing Office.

2.02 Complete sets of Bidding Documents must be used in preparing Bids; neither Owner nor Engineer assume responsibility for errors or misinterpretations resulting from the use of incomplete sets of Bidding Documents, or Bidding Documents purchased from sources other than the issuing office.

2.03 Bids from prospective Bidders who have not obtained the Bidding Documents from the issuing office and who have not obtained complete sets of Bidding Documents will not be accepted.

2.04 Copies of Bidding Documents are made available on the above terms only for the purpose of obtaining Bids on the Work and not to confer a license or grant for any other use.

2.05 Digitizing and posting Bidding Documents on the Internet or on websites of prospective Bidders and other parties, or reproduction of Bidding Documents by others, is not permitted without Engineer’s approval.

Article 3 - Qualifications of Bidders

3.01 To demonstrate qualifications to perform the Work, Bidder shall submit with the Bid the qualification data indicated in the Invitation to Bid, the following Paragraph(s) of Article 3, and

the Bid Form. Bidders shall also be prepared to submit, within five calendar days after the Bid opening date, upon Owner's request, such additional data as may be pertinent to the Project.

3.02 The Bid of out-of-State Bidders and their Sub-bidder(s), if any, shall contain evidence of qualification to do business in the State where the Project is located or covenant to obtain such qualification prior to and as a condition of award of a Contract.

A Bidders are required, under the Business Regulation Article, Section 17-602, Annotated Code of Maryland, to show evidence of Certificate of Registration before award of Contract.

B A copy of current License to operate in the State of Maryland will be required at the time of awarding the Contract.

3.03 To obtain information concerning qualifications of a Bidder, the Owner requires that a completed Experience Questionnaire be submitted on the form included in the Bidding Documents. Bidder shall include the completed Experience Questionnaire with the Bid.

3.04 Submission of financial information is not required with the Bid, but the Owner reserves the right to request such information as part of the Bid evaluation process.

3.05 Failure, or refusal, to submit documentation required by the Invitation to Bid, this Article 3, and the Bid Form will be reason for rejection of the Bid. Following are additional reasons for rejection of the Bid:

A. Failure to submit the Bid and other Bidding Documents, on the forms included in the Project Manual.

B. Failure to sign the Bid Form or any of the required affidavits and other documents attached to it.

C. Failure to furnish the required Bid Security.

D. Failure to include a unit/lump sum price for each item on the Bid Form, including Alternates.

E. The inclusion by Bidder of conditions or qualifications not provided for in the Bidding Requirements and Bidding Documents.

F. Submission of incomplete Bid Form or other required documents.

G. If the Bid Form contains any omissions, erasures, alterations, additions not called for, or irregularities of any other kind.

H. If any bid prices are obviously unbalanced.

I. Non-attendance at a mandatory pre-bid meeting and if applicable, site visit.

Article 4 - Examination of Contract Documents and Site

4.01 It is the responsibility of each Bidder before submitting a Bid:

A. To examine thoroughly the Bidding Documents;

B. To visit the site and become familiar with and satisfy Bidder as to the general, local and site conditions that may affect cost, progress, performance or furnishing of the Work;

C. To consider federal, state, and local Laws and Regulations that may affect cost, progress, performance or furnishing of the Work;

D. To study and carefully correlate Bidder's knowledge and observations with the Bidding Documents and such other related data; and

E. To promptly notify Engineer of all conflicts, errors, ambiguities or discrepancies which Bidder has discovered in or between the Bidding Documents.

F. Obtain such additional or supplementary examinations, investigations, explorations, tests studies, and data concerning conditions (surface, subsurface, and Underground Facilities) at or contiguous to the site or otherwise which may affect cost, progress, performance, or furnishing of the Work or which relate to any aspect of the means, methods, techniques, sequences or procedures of construction to be employed by Bidder and safety precautions and programs incident thereto or which Bidder deems necessary to determine its Bid for performing and furnishing the Work in accordance with the time, price, and other terms and conditions of the Contract Documents.

1. Bidder shall be responsible for restoration of areas disturbed due to supplementary examinations, investigations, explorations, and tests concerning existing aboveground and underground conditions at, or contiguous to the Site.

4.02 The submission of a Bid will constitute an incontrovertible representation by Bidder that Bidder has complied with every requirement of this Article 4, that without exception the Bid is premised upon performing and furnishing the Work required by the Bidding Documents and applying the specific means, methods, techniques, sequences or procedures of construction (if any) that may be shown or indicated or expressly required by the Bidding Documents, that Bidder has given Engineer written notice of all conflicts, errors, ambiguities and discrepancies that Bidder has discovered in the Bidding Documents and the written resolutions thereof by Engineer is acceptable to Bidder, and that the Bidding Documents are generally sufficient to indicate and convey understanding of all terms and conditions for performing and furnishing the Work.

4.03 The provisions of this Article 4 do not apply to Hazardous Environmental Conditions at the site; provisions concerning these conditions appear in Article 4, Paragraph 4.06 of the General Conditions.

Article 5 - Availability of Lands for Work

5.01 The lands upon which the Work is to be performed, rights-of-way and easements for temporary or permanent access thereto and other lands designated for use by Contractor in performing the Work are identified in the Bidding Documents. All additional lands and access thereto required for temporary construction facilities, construction equipment or storage of materials and equipment to be incorporated in the Work are to be obtained and paid for by Contractor. Easements for permanent structures or permanent changes in existing facilities are to be obtained and paid for by Owner unless otherwise provided in the Bidding Documents.

Article 6 - Interpretations and Addenda

6.01 All questions about the meaning or intent of the Bidding Documents shall be directed in written form, by fax or e-mail, to the Engineer. Interpretations, or clarifications, considered necessary by Engineer in response to such questions, will be issued by Addenda, mailed, e-mailed, or faxed to all parties recorded by Engineer as having purchased the Bidding Documents and, if applicable, been present at the pre-bid meeting and site visit. Questions received later than the deadline indicated on the Invitation to Bid, may not be answered. Only questions answered by formal written Addenda will be binding. Oral statements, interpretations, or clarifications will not be binding, or legally effective.

6.02 Addenda may also be issued to modify the Bidding Documents as deemed advisable by Owner or Engineer.

Article 7 - Bid Security

7.01 Each Bid must be accompanied by Bid security made payable to Owner in an amount of five (5) percent of Bidder's maximum Bid price and in the form of a certified or bank check, an irrevocable letter of credit, or a Bid Bond (on form attached) issued by a surety meeting the requirements of General Conditions Paragraphs 5.01, 5.02, and 5.03.

A. All instruments of Bid security shall be valid and remain in effect for the entire period that the Bids remain open.

B. Substitute Bid Bond forms are not acceptable.

7.02 The Bid security of the Successful Bidder will be retained until Bidder has executed the Agreement and furnished the required Performance and Payment Bonds, and Insurance Certificate.

7.03 Owner may annul the Notice of Intent to Award, if the apparent Successful Bidder fails or refuses to execute and deliver to the Owner the Agreement, together with the required Performance and Payment Bonds or other forms of security, and Insurance Certificate, within the number of calendar days specified in the Notice of Intent to Award. Bidder shall be considered in Default, and the full amount of its Bid Security shall be forfeited.

7.04 The Owner will return the Bid security and financial information, if any, of all Bidders, except the three apparent lowest responsible, responsive Bidders, within 30 calendar days after the date of Bid opening. The Bid security and financial information, if any, of the Contractor and the remaining two lowest Bidders will be returned upon execution of the Agreement by the Owner.

Article 8 - Contract Time

8.01 The number of calendar days within which, or the date by which, the Work is to be substantially completed (the Contract Time) are set forth in the Agreement.

Article 9 - Liquidated and Other Damages

9.01 Provisions for liquidated and other damages, if any, are set forth in the Agreement.

Article 10 - Substitutions and "Or Equal" Items

10.01 Bids shall be based on Products and methods covered in the Specifications and shown on the Drawings. When a Product specification includes the name or names of manufacturer(s), Bids shall be based on a Product which: (1) meets all Specification requirements; and (2) is produced by one of the manufacturers specifically named in the Specifications for that particular Product.

10.02 Requests for substitutions, "or Equal" for Products or methods other than those specified in the Project Manual, will not be considered prior to the Bid opening date. Refer to the "APPROVED LIST OF SUPPLIERS AND MATERIALS FOR WATER AND SEWER CONSTRUCTION for procedures to be used in making, and costs to Contractor associated with, such requests after award of the Contract.

Article 11 - Subcontractors

11.01 Article 7, Paragraph 7.06 of the General Conditions, as amended by Paragraph SC-7.06.A of the Supplementary Conditions, sets forth requirements as to the approval of Subcontractors, if any.

Article 12 - Bid Form

12.01 The Bid Form and other required Bidding Documents are contained within the Project Manual. Bids must be submitted on forms bound in these documents, or on duplicates provided by the Engineer; substitute Documents are not acceptable. If the forms bound within the Project Manual are used for the originals, they must be removed from the Project Manual for enclosing in the Bid envelope.

A. All blank spaces for Bid prices must be completed in ink or by typewriter and the Bid Form signed in ink. Erasures or alterations shall be initialed in ink by the person signing the Bid Form. The Bid price of each item on the Bid Form must be

stated in numerals and in words. Subject to the Owner's right to correct a Bidder's mathematical totals, a discrepancy between the word and numeral for a particular item will be resolved in favor of the word; corrections to the mathematical totals shall be signed and dated by the person making the correction. When Owner corrects mathematical errors, it shall strike the wrong total with a RED line, so that the original total remains visible.

12.02 The Bid of an individual must be signed by the individual personally; the individual's signature must be witnessed; and the individual's business address and any business trade name must be stated. The Bid of a partnership must state the names and addresses of all partners, and the partnership business name and address; and it must be signed by all general partners, with the signatures witnessed. The Bid of a corporation must show the State of incorporation and the principal office address, and must be signed by the President or Vice President, with the corporate seal affixed, attested by the Secretary or Assistant Secretary.

12.03 All names must be typed or printed below the signature.

12.04 The Bid shall contain an acknowledgement of receipt of all Addenda (the numbers and dates of which must be filled in on the Bid Form).

12.05 The address, e-mail, telephone number, and fax number of Bidder, and the name, e-mail, and telephone number of the individual to whom communications regarding the Bid are to be directed, must be shown.

12.06 The Bid Form may call for lump sum prices, unit prices, or a combination of both.

A. If the Bid form calls for lump sum prices, the Bidder shall state a single lump sum price for the entire Work, or single lump sum prices for each portion of the Work, subject to a lump sum price as set forth in the Bid form, as applicable. Any such lump sum price or prices shall include all the work described in the Contract Documents as being part of the Work.

B. If the Bid Form calls for unit prices, the Bidder shall state a single unit price for each item to be furnished or work to be done as set forth in the Bid Form. The Bid Form indicates, opposite each item for which a unit price is required, the Engineer's estimated quantity of units of such items which will be required in the prosecution of the Work; and the Bidder shall state in the space provided in the Bid Form the total price for such items, as computed by multiplying such estimated quantity of units of such item by the unit price bid.

12.07 Bid prices shall be all inclusive and shall include, if applicable, all taxes of whatever nature applicable to the Work.

12.08 Owner may be exempt from sales and use taxes for certain items to be incorporated into the Work. Each Bidder shall obtain legal advice to determine how and to what extent the Contractor may utilize the Owner’s tax exemption. Owner will provide, at the Contractor's request, documentation required to obtain applicable tax exemptions.

12.09 Submission of prices for all Alternates, if any, is mandatory.

Article 13 - Submission of Bids

13.01 Bids shall be submitted no later than the date and time, and at the place indicated in the Invitation to Bid, and shall be enclosed in an opaque sealed envelope, marked with the Project title (and, when applicable, the designated construction contract for which the Bid is submitted), the name and address of the Bidder, and accompanied by the Bid security and other required documents. If submission of financial information is required with the Bid, seal documents within a separate envelope (bearing the Bidder's name), marked "FINANCIAL INFORMATION - CONFIDENTIAL", and enclose within the Bid envelope. If the Bid is sent through the mail or other delivery system, the sealed Bid envelope shall be enclosed in a separate mailing envelope with the notation "BID ENCLOSED" on the face of it. **Bids submitted by means of telegraph, e-mail or facsimile machine will not be accepted.**

13.02 Documents to be submitted along with the Bid are specified on the Bid Form. Use loose forms included with the Project Manual or duplicate copies provided by the Engineer. If the forms bound within the Project Manual are used, the forms must be removed from the documents for enclosing in the Bid envelope.

13.03 The Bidder is solely responsible for delivering the Bid to the Owner at the location, and by the time of the Bid opening, designated in the Invitation to Bid. Owner, or Owner's authorized representative, will be available for the purpose of receiving Bids, at said location, immediately prior to the designated time of the Bid opening. No officer, employee, or agent of the Owner is authorized to accept receipt of a Bid on behalf of the Owner at any other time or place and the Owner shall have no responsibility for the receipt of mailed Bids or Bids delivered otherwise than to the Bid opening location as mentioned previously.

Article 14 - Modification and Withdrawal of Bids

14.01 Bids may be modified or withdrawn by an appropriate document duly executed (in the manner that a Bid must be executed) and delivered to the place where Bids are to be submitted at any time prior to the opening of Bids.

14.02 After the Bid opening, Bidder may withdraw its Bid, without forfeiture of Bid security, if Bidder submits credible evidence that there is an error in its Bid and such error was a clerical mistake as opposed to a judgement mistake and was due to an unintentional arithmetical error or an unintentional omission of a substantial quantity of the Work; provided: (1) notice of claim of the right to withdraw Bid is made in writing to the Owner within two business days after opening of Bids; and (2) the withdrawal of the Bid will not result in the awarding of the Contract on another Bid of the same Bidder, Bidder's partner, or a corporation, or business venture owned by Bidder, or in which Bidder has a substantial interest. A Bidder which is permitted to withdraw a Bid shall not supply any Products or labor to, or perform any subcontract, or other work, for any entity awarded a Contract, or subcontract for performance of the Work for which the withdrawn Bid was submitted.

Article 15 - Opening of Bids

15.01 Bids will be opened and (unless obviously non-responsive) read aloud publicly at the time and place set forth in the Request for Proposal.

15.02 An abstract of the amounts of Base Bids and major Alternates (if any) will be made available to Bidders after the opening of Bids.

Article 16 - Bids to Remain Subject to Acceptance

16.01 Bids shall remain open for a period of 60 days from the date of Bid opening unless award is delayed by a required approval from a governmental agency, the sale of bonds, or the award of a grant or grants, in which event the Bids shall remain open for a period of 120 days from the date of Bid opening. The Owner will either award the Contract within the applicable time period or reject all Bids, returning the Bid security to the Bidders. Thirty-day extensions of the date for the award may be made by the mutual written consent of the Owner and the apparent Successful Bidder.

Article 17 - Award of Contract

17.01 Owner reserves the right, without limitation, to reject any or all Bids, which are nonconforming, nonresponsive, unbalanced or conditional, and to reject the Bid of any Bidder, if Owner believes that it would not be in the best interest of the Project to make an award to that Bidder, whether because the Bidder is unqualified or of doubtful financial ability, or fails to meet any other pertinent standard or criteria established by Owner. Owner also reserves the right to waive all irregularities not involving price, time, or changes in the Work and to negotiate contract terms with the Successful Bidder.

17.02 The Owner will correct discrepancies in Bidder's mathematical totals. Discrepancies in the multiplication of units of Work and unit prices will be resolved in favor of the unit prices. Discrepancies between the indicated sum of any column of figures and the correct sum thereof will be resolved in favor of the correct sum. Discrepancies between words and figures will be resolved in favor of the words.

17.03 In evaluating Bids, Owner will consider the qualifications of Bidders, whether or not the Bids comply with the prescribed requirements, and such Alternates, unit prices, and other data, as may be listed on the Bid Form, or as may be requested by Owner prior to the Notice of Intent to Award.

17.04 In evaluating Bids Owner may consider the qualifications and experience of Subcontractors, Suppliers, and other persons and organizations proposed for those portions of the Work of which Owner, prior to Notice of Intent to Award, requests their identity. Owner also may consider, where applicable, the operating costs, maintenance requirements, performance data, and guarantees of major items of materials and equipment proposed for incorporation in the Work when such data are required to be submitted prior to the Notice of Intent to Award.

17.05 In evaluating Bids Owner may conduct such investigations as Owner deems necessary to assist in the evaluation of any Bid and to establish the responsibility, qualifications, and financial ability of Bidders, proposed Subcontractors, Suppliers, and other persons and organizations to perform and furnish the Work in accordance with the Contract Documents to Owner's satisfaction within the prescribed time.

17.06 If the Contract is to be awarded, it will be awarded to the lowest responsible, responsive Bidder whose evaluation by Owner indicates to Owner that the award will be in the best interests of the Project.

17.07 If the Contract is to be awarded, Owner will give the apparent Successful Bidder a Notice of Intent to Award within the time limits prescribed in Article 16.

17.08 Bidders may be required by Owner, prior to and as a condition of Contract award, to execute and sign documents related to financing of the Project.

17.09 More than one bid from an individual, partnership, corporation, or an association under the same name or different names will not be considered. Reasonable grounds for believing that the Bidder is interested in more than one Bid for the same Work will cause the rejection of all Bids in which such Bidder is interested. Any or all Bids will be rejected if there is any reason for believing that collusion exists among any of the Bidders; participants in such collusion will not be considered in future bidding.

Article 18 - Contract Bonds and Insurance

18.01 Article 6 of the General Conditions sets forth Owner's requirements as to performance and payment bonds and insurance to be provided by the Contractor. When the apparent Successful Bidder delivers the signed Agreement to Owner, it must be accompanied by the required Performance and Payment Bonds or Letters of Credit on the forms provided in the Bidding Documents. **Substitute forms are not acceptable.**

18.02 Article 6 of the General Conditions and the Supplementary Conditions set forth Owner's requirements as to insurance to be carried by the Contractor. When the apparent Successful Bidder delivers the signed Agreement to the Owner, it must be accompanied by the required insurance certificate on the latest version of the Acord 25 Certificate of Insurance form. All policies of insurance shown on the Certificate of Insurance shall not be cancelled or materially changed until ten days prior notice has been given by Contractor to Owner and Engineer and to each additional insured, and shall contain waiver provisions in accordance with General Conditions, Paragraph 6.06.

Article 19 - Signing of Agreement

19.01 When Owner gives a Notice of Intent to Award to the apparent Successful Bidder, it will be accompanied by four unsigned counterparts each of the Agreement (each with a copy of the Bid submission and, if applicable, the List of Proposed Subcontractors attached), Performance and Payment Bonds, or other forms of financial security. Apparent Successful Bidder shall sign and deliver to the Owner, within the calendar days specified in the Notice of Intent to Award, all

counterparts of the Agreement accompanied by the executed Performance and Payment Bonds (with a Power-of-Attorney certificate attached to each), or other forms of financial security and four originals of the required insurance certificate(s).

A. Successful Bidder(s)/Contractor(s) shall be responsible for all costs resulting from reviewing by Engineer, or others, of non-conforming, or incomplete Contract Document submissions prior to execution of an Agreement. Costs shall be deducted by Change Order from Contractor's first Application for Payment.

19.0 If the Owner finds the documents submitted by the apparent Successful Bidder acceptable, it will, within ten calendar days after receipt of such documents, complete the signing of the Agreement and submit two fully executed counterparts and accompanying documents to the Contractor.

19.03 The fully executed copies of the Agreement with accompany the Notice to Proceed.

19.04 Owner may annul the Contract, if the apparent Successful Bidder fails or refuses to execute and deliver to the Owner the Agreement, together with the required Performance and Payment Bonds or Letters of Credit, and Insurance Certificate, within the number of calendar days specified in the Notice of Intent to Award; Bidder shall be considered in Default, and the full amount of its Bid Bond shall be forfeited.

Article 20 - Pre-Bid Meeting and Site Visit

20.01 A pre-bid meeting and site visit will be held at the time and place set forth in the Invitation to Bid. Engineer will transmit to all prospective Bidders present at the pre-bid meeting and site visit such Addenda, as Engineer considers necessary in response to questions arising at the meeting. Attendance at the pre-bid meeting and site visit is **mandatory.** Bids from parties not present at the meeting and site visit will not be accepted**.**

Article 21 – **Regulatory Requirements**

21.01 MARYLAND CERTIFICATE OF REGISTRATION: Bidders are required, under the Business Regulation Article, Section 17-602, Annotated Code of Maryland, to show evidence of Certificate of Registration before award of Contract. A copy of current License to operate in the State of Maryland will be required at the time of awarding the Contract.

21.02 STEEL PRODUCTS PROCUREMENT ACT: In accordance with the State Finance and Procurement Article, Section 17-303, Annotated Code of Maryland, every public agency shall require that every contract document for the construction, reconstruction, alteration, repair, improvement or maintenance of Public Works contain a provision that, if any steel products are to be used or supplied in the performance of the contract, only steel products as herein defined shall be used or supplied in the performance of the contract or any subcontract thereunder.

A. "Public Works" are defined as any structure, building, highway, waterway, street, bridge, transit system, airport, or other betterment, work or improvement whether

of a permanent or temporary nature and whether for governmental or proprietary use.

B Steel products are defined as products rolled, formed, shaped, drawn, extruded, forged, cast, fabricated or otherwise similarly processed, or processed by a combination of two or more of such operations, from steel made in the United States by the open-hearth, basic hearth, basic oxygen, electric furnace, Bessemer or other steel making process.

C United States is defined as the United States of America and includes all territory, continental or insular, subject to the jurisdiction of the United States.

END OF INSTRUCTIONS TO BIDDERS

DOCUMENT 00300

BID FORM

BIDDER (Name and Address):

PROJECT IDENTIFICATION:	**ABERDEEN WATERMAIN EXTENSION CONTRACT NO. 21-12**
CONTRACT IDENTIFICATION:	General Construction
THIS BID IS SUBMITTED TO:	**CITY OF ABERDEEN** 60 North Parke Street P.O. Box 70 Aberdeen, MD 21001

1. The undersigned Bidder proposes and agrees, if this Bid is accepted, to enter into an Agreement with Owner in the form included in the Bidding Documents to perform and furnish all Work as specified or indicated in the Bidding Documents for the Contract Price and within the Contract Time(s) and in accordance with the other terms and conditions of the Bidding Documents.

2. Bidder accepts all of the terms and conditions of the Invitation to Bid and Instructions to Bidders, including without limitation those dealing with the disposition of Bid security. This Bid will remain subject to acceptance for a period of 60 days from the date of Bid opening unless award is delayed by a required approval from a governmental agency, the sale of bonds, or the award of a grant or grants, in which event the Bids shall remain open for a period of 120 days from the date of Bid opening. Thirty-day extensions of the date for the award may be made by the mutual written consent of the Owner and the apparent Successful Bidder. Bidder agrees, if required by Owner prior to and as a condition of Contract award, to execute and sign any documents related to financing of the Project. Bidder will sign and submit the Agreement with the Bonds and other documents required by the Bidding Documents within the number of days stated in the Owner's Notice of Intent to Award.

3. In submitting this Bid, Bidder represents, as more fully set forth in the Agreement, that:

   3.1 Bidder has examined copies of all the Bidding Documents and of the following Addenda (receipt of all which is hereby acknowledged):

Date	Number

3.2 Bidder has visited the site and become familiar with and is satisfied as to the general, local, and site conditions that may affect cost, progress, performance, and furnishing of the Work;

3.3 Bidder is familiar with and is satisfied as to all federal, state, and local Laws and Regulations that may affect cost, progress, performance, and furnishing of the Work.

3.4 Bidder has carefully studied all reports of explorations and tests of conditions at or contiguous to the site and all drawings of physical conditions in or relating to existing structures at or contiguous to the site which have been identified in the Supplementary Conditions as provided in Paragraph 5.03 of the General Conditions. Bidder acknowledges that such reports and drawings are not Bidding Documents or Contract Documents and may not be complete for Bidder's purposes. Bidder has obtained and carefully studied (or assumes responsibility for having done so) all such additional or supplementary examinations, investigations, explorations, tests, studies and data concerning conditions at or contiguous to the site or otherwise which may affect cost progress, performance, or furnishing of the Work or which relate to any aspect of the means, methods, techniques, sequences, and procedures of construction to be employed by Bidder and safety precautions and programs incident thereto. Bidder does not consider that any additional examinations, investigations, explorations, tests, studies, or data are necessary for the determination of this Bid for performance and furnishing of the Work in accordance with the times, price, and other terms and conditions of the Bidding Documents and Contract Documents.

3.5 Bidder is aware of the general nature of Work to be performed by Owner and others at the site that relates to Work for which this Bid is submitted as indicated in the Bidding Documents and Contract Documents.

3.6 Bidder has correlated the information known to Bidder, information and observations obtained from visits to the site, reports and drawings identified in the Bidding Documents and Contract Documents and all additional examinations, investigations, explorations, tests, studies, and data with the Bidding Documents and Contract Documents.

3.7 Bidder has given Engineer written notice of all conflicts, errors, ambiguities, or discrepancies that Bidder has discovered in the Bidding Documents and Contract Documents and the written resolution thereof by Engineer is acceptable to Bidder, and the Bidding Documents and Contract Documents are generally sufficient to indicate and convey understanding of all terms and conditions for performing and furnishing the Work for which this Bid is submitted.

3.8 This Bid is genuine and not made in the interest of or on behalf of any undisclosed person, firm, or corporation and is not submitted in conformity with any agreement or rules of any group, association, organization, or corporation; Bidder has not directly or indirectly induced or solicited any other Bidder to submit a false or sham Bid; Bidder has not solicited or induced any person, firm or corporation to refrain from bidding; and Bidder has not sought by collusion to obtain for itself any advantage over any other Bidder or over Owner.

3.9 Contractor is reminded that all Utilities shown on the Contract Drawings are for informational purposes only. The Contractor is required to comply with all provisions of the MISS Utility One Call System for locating utilities. Contractor will protect and maintain all underground and above ground utilities during construction. Contractor is required to locate all facilities in advance of all work. The cost to locate all existing utilities shall be borne by the Contractor and included in their bid. The location of any new water main facilities may be adjusted depending on the final field location of any existing utilities.

4.1 The Basis of Design and permitting was based on an open cut pipe installation with Horizontal Direction Drilling (HDD) at the locations noted on the contract drawings. The Owner will give consideration to HDD installation of the entire proposed water main. Two bid forms are provided in the contract documents. Only one bid form needs to be filled out, but both forms must be returned. Owner will determine the lowest responsible bidder based on the bids received.

4.2 Bidder will complete the Work for the following lump sum and unit prices price. Refer to the appropriate sections of the Harford County Standard Specifications and Details for Water and Sewer Mains for description of pay items.

5. Bidder agrees that the Work will be substantially complete on or before the dates or within the number of calendar days indicated in the Agreement.

Bidder accepts the provisions of the Agreement as to liquidated and other damages in the event of failure to complete the Work on time.

6. The following documents are attached to and made a condition of this Bid:

6.1 Required Bid Security in the form of_____.

6.2 Experience Questionnaire; Document 00400.

6.3 List of Proposed Subcontractors; Document 00450.

6.4 Maryland Certificate of Registration may be submitted with the Bid, or prior to and as a condition of award of the Contract.

7. Communications concerning this Bid will be addressed to (Bidder's Contact Person):

_____

Phone: ( ) _____

Fax: ( ) _____

Company Email Address: _____

8. The terms used in this Bid are defined and have the meanings assigned to them in the General Conditions, as may be amended by the Supplementary Conditions, included as part of the Bidding Documents.

9. Bidder acknowledges that the Bid Price is based on Products and methods described and named in the Drawings and Specifications.

10. Bidder certifies that (s)he visited the site on_____, _____, 2021.

INTENDING TO BE LEGALLY BOUND, the undersigned submits the forgoing Bid this _____ day of _____, 2021.

(If Bidder is an Individual)

_____	_____
Signature of Witness	Signature of Individual
	Trading and doing business as:
	_____
	Name of Business
	_____
	Address of Business

(If Bidder is a Limited Liability Company – All Members Must Sign)

	_____
	Name of Company
	_____
	Address of Company
_____	_____
Signature of Witness	Signature of Member
_____	_____
Signature of Witness	Signature of Member
_____	_____
Signature of Witness	Signature of Member

(If Bidder is a Partnership - All General Partners Must Sign)

	Name of Partnership
	Address of Partnership
Signature of Witness	Signature of Partner
Signature of Witness	Signature of Partner
Signature of Witness	Signature of Partner

(If Bidder is a Corporation)

Attest:

	Name of Corporation
Signature of Secretary or Assistant Secretary	Address of Principal Office
(Corporate Seal)	State of Incorporation
	Signature of President or Vice President

Type or print name below each signature.

State here the names and addresses of all partners, if a partnership, or of three principal officers, if a corporation.

END OF BID FORM

Aberdeen Watermain Extension - 12" PVC Bid Form

	Description	units	Est. Quantity	Unit Price	Total Price
Section 01000	General Provisions				
	a. 01000-28 - Traffic Control	LS	1	$	$
	b. 01000-28.01 - Concrete Jersey Barrier (Temporary) *(Incidental)*	LF	439	*For informational purpose only*	
	c. 01000-35 - Mobilization	LS	1	$	$
Document 00500	Agreement				
	a. 00500-4.4.1 - Test Pitting	LS	1	$	$
Section 02300	Boring and/or Jacking Pipe				
	a. 02300-02 - 20" Steel Casing Pipe	LF	155	$	$
Section 02310 A (See Supplemental Specifications)	Horizontal Directional Drilling				
	a. 02310-01 - Watermain Directional Drill *(Incidental)*	LF	934	*For informational purpose only*	
	b. 02310.02 - Sanitary Sewer Force Main Directional Drill *(Incidental)*	LF	210	*For informational purpose only*	
	Section 02310A To be Bid Incidental to Sections 02660 / 02720				
Section 02660	Water Mains				
	a. 02660-02 - 12" PVC Watermain	LF	4449	$	$
	b. 02660-02 - 8" PVC Watermain	LF	13	$	$
	c. Supplemental Spec - 14" HDPE Watermain	LF	934	$	$
	d. 02660-02 - 12" DIP Watermain	LF	60	$	$
	e. 01000-09 - Connection to Ex. Watermain *(Incidental)*	EA	2	*For informational purpose only*	
	f. 02660-03 - 14" Fittings *(Incidental)*	EA	16	*For informational purpose only*	
	g. 02660-03 - 12" Fittings *(Incidental)*	EA	40	*For informational purpose only*	
	h. 02660-03 - 12" Restraint Gaskets *(Incidental)*	EA	46	*For informational purpose only*	
	i. 02660-04 - Tracer Wire *(Incidental)*	LF	6450	*For informational purpose only*	
	j. 02660-04 - Continuity Test Stations *(Incidental)*	EA	9	*For informational purpose only*	
	k. E&S - Inlet Protection	EA	3	*For informational purpose only*	
	l. E&S - Compost Filter Log	LF	467	*For informational purpose only*	
Section 02662	Water Valves and Appurtenances				
	a. 02662-02 - 12" Gate Valve	EA	15	$	$
	b. 02662-04 - 1" Air/Vacuum Release Valve	EA	6	$	$
Section 02666	Fire Hydrants	EA	2	$	$
	a. 6" Hydrant Lead Pipe *(Incidental)*	LF	25	*For informational purpose only*	
	b. 12"x12"x6" Hydrant Tee *(Incidental)*	EA	2	*For informational purpose only*	
	c. 6" Valve *(Incidental)*	EA	2	*For informational purpose only*	
	d. Hydrant Lock *(Incidental)*	EA	2	*For informational purpose only*	
Section 02720	Sanitary Sewer Forcemains				
	a. 6" PVC Sanitary Sewer Forcemain	LF	700	$	$
	02720.01 - Connect to Ex. Manhole *(Incidental)*	EA	2	*For informational purpose only*	
Section 02800	Restoration *(Incidental)*				
	a. 02800-02 - Road & Driveway Base Course	SY	2845	*For informational purpose only*	
	b. 02800-02 - Road & Driveway Wearing Course	SY	5770	*For informational purpose only*	
	c. 02800-04 - Remove & Replace Guiderail	LF	170	*For informational purpose only*	
	Section 02800 To be Bid Incidental to Sections 02660 / 02720				
Section 02820	Turf Establishment (Lawn Restoration)	SY	2130	$	$
Secion 03300	Cast-In-Place Concrete				
	a. 03300-01 - Thrust Block *(Incidental)*	EA	8	*For informational purpose only*	
	Section 03300 To be Bid Incidental to Section 02660 - Water Main				
Section 03400	Precast Concrete Utility Structures				
	a. 03400-02 - 60" Concrete Manhole	EA	6	$	$

Total Bid Price $ _____
(use figures)

_____

_____
(use words)

Aberdeen Watermain Extension - 14" HDPE Bid Form

	Description	units	Est. Quantity	Unit Price	Total Price
Section 01000	General Provisions				
	a. 01000-28 - Traffic Control	LS	1	$	$
	b. 01000-28.01 - Concrete Jersey Barrier (Temporary) *(Incidental)*	LS	1	*For informational purpose only*	
	c. 01000-35 - Mobilization	LS	1	$	$
Document 00500	Agreement				
	a. 00500-4.4.1 - Test Pitting	LS	1	$	$
Section 02300	Boring and/or Jacking Pipe				
	a. 02300-02 - 20" Steel Casing Pipe	LF	155	$	$
Section 02310 A (See Supplemental Specifications)	Horizontal Directional Drilling				
	a. 02310-01 - Watermain Directional Drill *(Incidental)*	LF	5200	*For informational purpose only*	
	b. 02310.02 - Sanitary Sewer Force Main Directional Drill *(Incidental)*	LF	210	*For informational purpose only*	
	Section 02310A To be Bid Incidental to Sections 02660 / 02720				
Section 02660	Water Mains				
	a. Supplemental Spec - 14" HDPE Watermain	LF	5200	$	$
	b. 02660-02 - 8" PVC Watermain	LF	13	$	$
	c. 02660-02 - 12" PVC Watermain	LF	183	$	$
	d. 02660-02 - 12" DIP Watermain	LF	60	$	$
	e. 01000-09 - Connection to Ex. Watermain *(Incidental)*	EA	2	*For informational purpose only*	
	f. 02660-03 - 14" Fittings *(Incidental)*	LS	1	*For informational purpose only*	
	g. 02660-03 - 12" Fittings *(Incidental)*	LS	1	*For informational purpose only*	
	h. 02660-03 - 12" Restraint Gaskets *(Incidental)*	LS	1	*For informational purpose only*	
	i. 02660-04 - Tracer Wire two (2) strands for HDD *(Incidental)*	LF	10596	*For informational purpose only*	
	j. 02660-04 - Continuity Test Stations *(Incidental)*	EA	9	*For informational purpose only*	
	k. E&S - Inlet Protection	EA	3	*For informational purpose only*	
	l. E&S - Compost Filter Log	LF	467	*For informational purpose only*	
Section 02662	Water Valves and Appurtenances				
	a. 02662-02 - 12" Gate Valve	EA	15	$	$
	b. 02662-04 - 1" Air/Vacuum Release Valve	EA	6	$	$
Section 02666	Fire Hydrants	EA	2	$	$
	a. 6" Hydrant Lead Pipe *(Incidental)*	LF	25	*For informational purpose only*	
	b. 12"x12"x6" Hydrant Tee *(Incidental)*	EA	2	*For informational purpose only*	
	c. 6" Valve *(Incidental)*	EA	2	*For informational purpose only*	
	d. Hydrant Lock *(Incidental)*	EA	2	*For informational purpose only*	
Section 02720	Sanitary Sewer Forcemains				
	a. 6" PVC Sanitary Sewer Forcemain	LF	700	$	$
	02720.01 - Connect to Ex. Manhole *(Incidental)*	EA	2	*For informational purpose only*	
Section 02800	Restoration *(Incidental)*				
	a. 02800-02 - Road & Driveway Base Course	LS	1	*For informational purpose only*	
	b. 02800-02 - Road & Driveway Wearing Course	LS	1	*For informational purpose only*	
	c. 02800-04 - Remove & Replace Guiderail	LS	1	*For informational purpose only*	
	Section 02800 To be Bid Incidental to Sections 02660 / 02720				
Section 02820	Turf Establishment (Lawn Restoration)	LS	1	$	$
Secion 03300	Cast-In-Place Concrete				
	a. 03300-01 - Thrust Block *(Incidental)*	LS	1	*For informational purpose only*	
	Section 03300 To be Bid Incidental to Section 02660 - Water Main				
Section 03400	Precast Concrete Utility Structures				
	a. 03400-02 - 60" Concrete Manhole	EA	6	$	$
	Total Bid Price				$ (use figures)

(use words)

DOCUMENT 00350

BID BOND

BIDDER (Name and Address):

SURETY (Name and Address):

OWNER (Name and Address): **CITY OF ABERDEEN**
60 North Parke Street
P.O. Box 70
Aberdeen, MD 21001

PROJECT
Bid Date:
Project Identification: **ABERDEEN WATERMAIN EXTENSION**
CONTRACT NO. 21-12

CONTRACT IDENTIFICATION General Construction

BOND
Date:
Amount:

1. Bidder and Surety, jointly and severally, bind themselves, their heirs, executors, administrators, successors and assigns to pay to Owner upon default of Bidder the full face amount of this Bond.

2. Default of Bidder shall occur upon the failure of Bidder to deliver within the time required by the Bidding Documents, the executed Agreement required by the Bidding Documents, and any Performance Bonds, Payment Bonds, Certificates of Insurance, or other documents required by the Bidding Documents and Contract Documents.

3. This obligation shall be null and void if:

3.1 Owner accepts Bidder's Bid and Bidder delivers within the time required by the Bidding Documents (or any extension thereof agreed to in writing by Owner) the executed Agreement required by the Bidding Documents and any Performance Bonds, Payment Bonds, Certificates of Insurance, or other documents required by the Bidding Documents and Contract Documents, or

3.2 All Bids are rejected by Owner, or

3.3 Owner fails to issue a Notice of Award to Bidder within the time specified in the Bidding Documents (or any extension thereof).

4. Payment under this Bond will be due and payable upon default of Bidder and within 30 calendar days after receipt of Bidder and Surety of written notice of default from Owner, which notice will be given with reasonable promptness, identifying this Bond and the Project and including a statement of the amount due.

5. Surety waives notice of and any and all defenses based on or arising out of any time extension to issue Notice of Award, provided that the time for issuing Notice of Award shall not in the aggregate exceed 120 days from Bid opening date without Surety's written consent.

6. No suit or action shall be commenced under this Bond prior to 30 calendar days after the notice of default required in paragraph 4 above is received by Bidder and Surety, and in no case later than one year after Bid opening date.

7. Any suit or action under this Bond shall be commenced only in a court of competent jurisdiction located in the state in which the Project is located.

8. Notice required hereunder shall be in writing and sent to Bidder and Surety at their respective addresses shown on the first page of this Bond. Such notices may be sent by personal delivery, commercial courier or by United States Registered or Certified Mail, return receipt requested, postage pre-paid, and shall be deemed to be effective upon receipt by the party concerned.

9. Surety shall cause to be attached to this Bond a current and effective Power of Attorney evidencing the authority of the officer, agent or representative who executed this Bond on behalf of Surety to execute, seal and deliver such Bond and bind the surety thereby.

10. This Bond is intended to conform to all applicable statutory requirements. Any applicable requirement of any applicable statute that has been omitted from this Bond shall be deemed to be included herein as if set forth at length. If any provision of the Bond conflicts with any applicable provision of any applicable statute, then the provision of said statute shall govern and the remainder of this Bond that is not in conflict therewith shall continue in full force and effect.

11. The terms used in this Bid Bond which are defined in the General Conditions have the meaning assigned to them in the General Conditions.

(If Bidder is an Individual)

Signature of Witness	Signature of Individual

Trading and doing business as:

Name of Business

Address of Business

(If Bidder is a Limited Liability Company – All Members Must Sign)

Name of Company

Address of Company

Signature of Witness	Signature of Member
Signature of Witness	Signature of Member
Signature of Witness	Signature of Member

(If Bidder is a Partnership - All General Partners Must Sign)

	Name of Partnership
	Address of Partnership
Signature of Witness	Signature of Partner
Signature of Witness	Signature of Partner
Signature of Witness	Signature of Partner

(If Bidder is a Corporation)

Attest:

	Name of Corporation
Signature of Secretary or Assistant Secretary	Address of Principal Office
(Corporate Seal)	State of Incorporation
	Signature of President or Vice President

Type or print name below each signature.

(Corporation Surety)

Name of Corporation

Address of Office

Signature of Witness

Signature of Attorney-in-fact

Attach an appropriate power of attorney, dated as of the same date as the Bond, evidencing the authority of the Attorney-in-fact to act in behalf of the corporation.

Type or print name below each signature.

NOTE: Substitute Bid Bond Form is not acceptable. Failure to submit Bond on this form will be reason for rejection of Bid.

END OF BID BOND

DOCUMENT 00400

EXPERIENCE QUESTIONNAIRE

PROJECT IDENTIFICATION: **ABERDEEN WATERMAIN EXTENSION**
CONTRACT NO. 21-12

CONTRACT IDENTIFICATION: **General Construction**

SUBMITTED TO: **CITY OF ABERDEEN**
60 North Parke Street
P.O. Box 70
Aberdeen, MD 21001

BY: _____ (-Corporation
(-Partnership
(-An Individual

PRINCIPAL OFFICE ADDRESS _____

The signer of this questionnaire attests to the truth and accuracy of all statements and of all answers to interrogatories hereinafter made.

1. What type of business is Bidder's company? _____

2. How many years has Bidder's company been performing work as a Contractor, or Subcontractor of the type required for this Project? _____

3. Provide information on all service contracts currently in progress.

Contract Amt.	Type of Work (±)	% Completed	Name and Address of Owner(*)	Engineer/ Architect(*)

(*) Provide name of contact person.
(±)Identify if work was performed as a Contractor or Subcontractor

4. What projects, comparable to this Project, has Bidder's company completed within the past (10) years?

Contract Amt.	Type of Work (±)	When Completed	Name and Address of Owner (*)	Engineer/ Architect (*)

(*) Provide name of contact person.
(±)Identify if work was performed as a Contractor or Subcontractor

5. Has Bidder's company ever defaulted on a contract, or failed to complete a contract? _____

If yes, where and why? _____

6. Has Bidder's company ever been debarred? If yes, when, why and by which agency, or political subdivision?

7. Has the Bidder, or any of the company's executives ever been found guilty of a felony? If yes, when and why?

8. List names, addresses, and phone numbers of individuals, or companies referenced in Item 4, that may be contacted by Owner, or Engineer to obtain references.

9. What is the construction experience of the principal individuals of Bidder's company?

Individual's Name	Present Position or Office	Magnitude and Type of Work	In What Capacity?

STATE OF _____

COUNTY OF _____

_____ being duly sworn deposes and

says that (s)he is _____ of _____
Title Name of Company

and attests that the answers to the foregoing questions and all statements therein are true and correct.

_____
Signature

Sworn to before me this _____ Day of _____, 20 _____

My commission expires

_____ _____
Signature of Notary Public

Type or print name below each signature.

END OF EXPERIENCE QUESTIONNAIRE

DOCUMENT 00450

LIST OF PROPOSED SUBCONTRACTORS

PROJECT IDENTIFICATION : **ABERDEEN WATERMAIN EXTENSION**
CONTRACT NO. 21-12

CONTRACT IDENTIFICATION: General Construction

SUBMITTED TO: **CITY OF ABERDEEN**
60 North Parke Street
P.O. Box 70
Aberdeen, MD 21001

List proposed subcontracts as required in Instructions to Bidders.

Description of Subcontract	Subcontractor's Name	Subcontractor's Address

Signature

Typed or Printed Name

Date _____

Title

NOTE: This List of Proposed Subcontractors must be submitted with the Bid, and failure to submit will be reason for rejection of the Bid.

END OF LIST OF SUBCONTRACTORS

DOCUMENT 00500

AGREEMENT

ABERDEEN WATERMAIN EXTENSION, CONTRACT # 21-12

This Agreement made and entered into this _____ day of _____, 2021

by and between **CITY OF ABERDEEN**,

hereinafter called the Owner,

and

_____

whose address is _____

City of _____

State of _____, hereinafter called the Contractor,

WITNESSETH, that the parties hereto for the consideration stated do mutually agree as follows:

ARTICLE 1 – SCOPE OF WORK

1.1 The Contractor agrees to furnish all labor, superintendence, materials, necessary equipment, and other utilities and facilities for, perform all work necessary for or incidental to, and perform all other obligations imposed by this Agreement for, the complete Work in connection with **ABERDEEN WATERMAIN EXTENSION- CONTRACT NO. 21-12** herein called for, all in strict accordance with the Contract Documents as prepared by GHD, Inc., acting as and entitled the Engineer in this Agreement.

1.2 The Contract Documents are defined in the General Conditions. The Contract Documents comprise the entire Agreement between Owner and Contractor and are incorporated in this Agreement and made a part hereof. The Contract Documents may only be amended as described in Paragraph 11.01 of the General Conditions.

1.2.1 In the event of a discrepancy among Contract Documents, the provisions of this Agreement (Document 00500) and the provisions of the Supplementary Conditions (Document 00800) shall take precedence over the Standard General Conditions (Document 00700).

1.3 The Drawings for the Work covered under this Agreement consist of the DRAWINGS titled *ABERDEEN WATERMAIN EXTENSION* (14 sheets)

ARTICLE 2 – CONTRACT TIMES

2.1 The Work shall be substantially completed within 160 calendar days after the date when the Contract Times commence to run as provided in General Conditions Paragraph 4.01.A as amended in SC-4.01.A, as amended by Supplementary Conditions Paragraph SC-15.03, and completed and ready for final payment in accordance with Paragraph 15.06 of the General Conditions within 190 calendar days after the date when the Contract Times commence to.

2.2 Liquidated Damages. Owner and Contractor recognize that time is of the essence of this Agreement and that Owner will suffer financial loss if the Work is not completed within the times specified in Paragraph 2.1 above, plus any extensions thereof allowed in accordance with Article 11 of the General Conditions. They also recognize the delays, expense and difficulties involved in proving the actual loss suffered by Owner if the Work is not completed on time. Accordingly, instead of requiring any such proof, Owner and Contractor agree that as liquidated damages for delay (but not as a penalty) Contractor shall pay Owner $500.00 for each calendar day that expires after the time specified in Paragraph 2.1 above for Substantial Completion until the Work is substantially complete. After Substantial Completion, if Contractor shall neglect, refuse, or fail to complete the remaining Work within the time specified in Paragraph 2.1 above for completion and readiness for final payment or any proper extension thereof granted by Owner, Contractor shall pay Owner $500.00 for each calendar day that expires after the time specified in Paragraph 2.1 above for completion and readiness for final payment.

2.3 Additional Damages: In addition to the liquidated damages amount(s) specified above under Paragraph 2.2, Contractor also agrees to reimburse Owner for all administrative, legal, engineering, and construction observation costs associated with Contractor's failure to meet any deadline specified above under Article 2, and all actual damages that may result from Contractor’s defective work.

ARTICLE 3 – CONTRACT PRICE, PAYMENT, AND RETAINAGE

3.1 The Owner shall pay, and the Contractor shall receive and accept as full payment for the performance of the Contractor's obligations hereunder, the price(s) stipulated in the Bid Form hereto attached, subject to additions and deductions as provided, and in the manner as specified in the General Conditions and subject to the retainage provisions set forth below.

3.2 Retainage:

3.2.1 The Owner will withhold (5%) five percent of the amount of approved Applications for Payment until the Work is Substantially Complete.

3.2.2 In addition to retainage, the Owner will withhold from payment otherwise due the Contractor any amount that the Owner reasonably believes necessary to protect its interest.

3.2.3 Except as provided in paragraph 3.2.4 below, within 120 days after Final Completion of the Work, Owner will release any retainage due to the Contractor.

3.2.4 In the event that a dispute arises between the Owner and the Contractor, concerning the satisfactory completion of the Work, the Owner will release the retainage to the contractor within 120 days after the resolution of the dispute or contract claim.

3.2.5 Contractor shall not withhold a percentage of payment due a subcontractor that exceeds the percentage of payment retained by the Owner.

3.2.6 Liquidated and other damages shall be deducted, by Change Order, from money due, or to become due, to the Contractor, evidenced by a current application for payment.

3.3 Final Payment. Upon final completion and acceptance of the Work in accordance with General Conditions Paragraph 15.06, Owner shall pay the remainder of the Contract Price less the amount of liquidated and/or other damages and the amount of any unresolved claims, which have been filed against the Owner in connection with the Work, as recommended by Engineer in accordance with said General Conditions Paragraph 15.06.

3.4 Interest. All moneys not paid when due as provided in Article 15 of the General Conditions shall bear interest at the maximum rate allowed by law in the State where the Project is located.

ARTICLE 4 – CONTRACTOR'S REPRESENTATIONS

In order to induce Owner to enter into this Agreement, Contractor makes the following representations:

4.1 Contractor has examined and carefully studied the Contract Documents and the other related data identified in the Bidding Documents.

4.2 Contractor has visited the site and become familiar with and is satisfied as to the general, local, and site conditions that may affect cost, progress, performance, and furnishing of the Work.

4.3 Contractor is familiar with and is satisfied as to all federal, state, and local Laws and Regulations that may affect cost, progress, performance, and furnishing of the Work.

4.4 Contractor is aware that existing utilities shown on drawings, including, but not limited to, water mains, storm drains, sanitary sewers, gas mains, electric lines, fiber optic cables, communications cable, and all other utilities are shown on the drawings in accordance with the best information available for the information of the Contractor. The Owner assumes no responsibility for accuracy or completeness of information shown. It is the responsibility of the Contractor to verify the actual location of existing utilities prior to beginning work, and to maintain any utility location markings at no additional cost to the Owner.

4.4.1 Contractor is responsible for locating all utilities within the project area. The location and depth of all existing utilities shall be verified by the Contractor in advance of construction. The existing utilities shall be verified through safe soft dig testing pitting. The X,Y,Z location of the all utilities shall be obtained by the contractor in advance of construction and made available to Owner and Engineer. Horizontal location shall be based on Maryland State Plane NAD83 and vertical location based on NAVD 88. All costs associated with existing utility location shall be based on a lump sum bid price on the bid form.

THE LOCATION AND DEPTH OF ALL EXISTING UTILITIES SHALL BE VERIFIED BY THE CONTRACTOR IN ADVANCE OF CONSTRUCTION. THE EXISTING UTILITIES SHALL BE VERIFIED THROUGH SAFE SOFT DIG TEST PITTING. THE CONTRACTOR SHALL PROTECT SERVICE CONNECTIONS AND MAINTAIN THEIR UNITERRUPTED SERVICE. ANY DAMAGE CAUSED BY THE CONTRACTOR SHALL BE REPAIRED IMMEDIATELY. THE COST OF SUCH REPAIRS SHALL BE BORNE BY THE CONTRACTOR.

4.5 Contractor has carefully studied all reports of explorations and tests of conditions at or contiguous to the site and all drawings of physical conditions in or relating to existing structures at or contiguous to the site which have been identified in the Supplementary Conditions as provided in Paragraph SC-5.06 of the Supplementary Conditions. Contractor acknowledges that Owner and Engineer do not assume responsibility for the accuracy or completeness of information and data shown or indicated in the Contract Documents with respect to Underground Facilities at or contiguous to the site. Contractor has obtained and carefully studied (or assumes responsibility for having done so) all such additional supplementary examinations, investigations, explorations, tests, studies, and data concerning conditions (surface, subsurface, and Underground Facilities) at or contiguous to the site or otherwise which may affect cost, progress, performance, or furnishing of the Work or which relate to any aspect of the means, methods, techniques, sequences, and procedures of construction to be employed by Contractor and safety precautions and programs incident thereto. Contractor does not consider that any additional examinations, investigations, explorations, tests, studies, or data are necessary for the performance and furnishing of the Work at the Contract Price, within the Contract Times and in accordance with the other terms and conditions of the Contract Documents.

4.6 Contractor is aware of the general nature of work to be performed by Owner and others at the site that relates to the Work as indicated in the Contract Documents.

4.7 Contractor has correlated the information known to Contractor, information and observations obtained from visits to the site, reports, and drawings identified in the Contract Documents and all additional examinations, investigations, explorations, tests, studies, and data with the Contract Documents.

4.8 Contractor has given Engineer written notice of all conflicts, errors, ambiguities, or discrepancies that Contractor has discovered in the Contract Documents and the written resolution thereof by Engineer is acceptable to Contractor, and the Contract Documents are

generally sufficient to indicate and convey understanding of all terms and conditions for performance and furnishing of the Work.

ARTICLE 5 – MISCELLANEOUS

5.1 Terms used in this Agreement which are defined in Article 1 of the General Conditions, as modified by the Supplementary Conditions, will have the meanings indicated in the General Conditions.

5.2 No assignment by a party hereto of any rights under or interests in the Contract Documents will be binding on another party hereto without the written consent of the party sought to be bound; and, specifically but without limitation, moneys that may become due and moneys that are due may not be assigned without such consent (except to the extent that the effect of this restriction may be limited by law), and unless specifically stated to the contrary in any written consent to an assignment no assignment will release or discharge the assignor from any duty or responsibility under the Contract Documents.

5.3 Owner and Contractor each binds itself, its partners, successors, assigns, and legal representatives to the other party hereto, its partners, successors, assigns, and legal representatives in respect to all covenants, agreements, and obligations contained in the Contract Documents.

5.4 Any provision or part of the Contract Documents held to be void or unenforceable under any Law or Regulation shall be deemed stricken, and all remaining provisions shall continue to be valid and binding upon Owner and Contractor, who agree that the Contract Documents shall be reformed to replace such stricken provision or part thereof with a valid and enforceable provision that comes as close as possible to expressing the intention of the stricken provision.

ARTICLE 6 – DISPUTE RESOLUTION

6.1 Any disputes between parties to the Contract which do not reach amicable settlement shall be tried by a Court of Law in Harford County, Maryland. The Contractor shall carry on the Work and maintain the Progress Schedule, during any disputes unless otherwise directed by the Owner.

IN WITNESS WHEREOF, the parties hereto have executed this Agreement the day and year first above written.

(If Contractor is an Individual)

Signature of Witness	Signature of Individual

Trading and doing business as:

Name of Business

Address of Business

(If Contractor is a Limited Liability Company – All Members Must Sign)

Name of Company

Address of Company

Signature of Witness	Signature of Member
Signature of Witness	Signature of Member

(If Contractor is a Partnership - All General Partners Must Sign)

Name of Partnership

Address of Partnership

Signature of Witness	Signature of Partner
Signature of Witness	Signature of Partner
Signature of Witness	Signature of Partner

(If Contractor is a Corporation)

Attest:

Name of Corporation

Signature of Secretary or Assistant Secretary	Address of Principal Office
(Corporate Seal)	State of Incorporation
	Signature of President or Vice President

(Owner)

Attest:

City of Aberdeen
Owner's Organizational Name

60 North Parke Street Aberdeen, MD 21001
Owner's Address

Signature	Signature
Shawn Brogan, Procurement Officer	Parley Hess, Engineering Asst
Signature	Signature
Kyle Torster, Director of Public Works	Randy Robertson, City Manager

Type or print name below each signature.

END OF AGREEMENT

DOCUMENT 00610

PERFORMANCE BOND

CONTRACTOR (Name and Address): SURETY (Name and Address):

OWNER (Name and Address): **CITY OF ABERDEEN**
60 North Parke Street
P.O. Box 70
Aberdeen, MD 21001

AGREEMENT
Amount:
Project Identification: **ABERDEEN WATERMAIN EXTENSION**
CONTRACT NO. 21-12

CONTRACT IDENTIFICATION General Construction

BOND
Date:
Amount:

1. The Contractor and the Surety, jointly and severally, bind themselves, their heirs, executors, administrators, successors and assigns to the Owner for the Performance of the Work as defined by the Agreement, which is incorporated herein by reference.

2. If the Contractor performs the Work, the Surety and the Contractor shall have no obligation under this Bond, except to participate in conferences as provided in Paragraph 3.1.

3. If there is no Owner Default, the Surety's obligation under this Bond shall arise after:

3.1 The Owner has notified the Contractor and the Surety at its address described in Article 10 below, that the Owner is considering declaring a Contractor Default and has requested and attempted to arrange a conference with the Contractor and the Surety to be held not later than fifteen days after receipt of such notice to discuss methods of performing the Work. If the Owner, the Contractor, and the Surety agree, the Contractor shall be allowed a reasonable time to perform the Work, but such an agreement shall not waive the Owner's right, if any, subsequently to declare a Contractor default; and

3.2 The Owner has declared a Contractor default and formally terminated the Contractor's right to complete the Work. Such Contractor Default shall not be declared earlier than twenty days after the Contractor and the Surety have received notice as provided in Paragraph 3.1; and

3.3 The Owner has agreed to pay the Balance of the Contract Price to the Surety in accordance with the terms of the Agreement or to a contractor selected to perform the Work in accordance with the terms of the Agreement with the Owner.

4. When the Owner has satisfied the conditions of Article 3, the Surety shall promptly and at the Surety's expense take one of the following actions:

4.1 Arrange for the Contractor, with consent of the Owner, to perform and complete the Work; or

4.2 Undertake to perform and complete the Work itself, through its agents or through independent contractors; or

4.3 Obtain bids or negotiated proposals from qualified contractors acceptable to the Owner for a contract for performance and completion of the Work, arrange for a contract to be prepared for execution by the Owner and the contractor selected with the Owner's concurrence, to be secured with performance and payment bonds executed by a qualified surety equivalent to the bonds issued on the Work, and pay to the Owner the amount of damages as described in Article 6 in excess of the Balance of the Contract Price incurred by the Owner resulting from the Contractor's default; or

4.4 Waive its right to perform and complete, arrange for completion, or obtain a new contractor and with reasonable promptness under the circumstances:

1. After investigation, determine the amount for which it may be liable to the Owner and, as soon as practicable after the amount is determined, tender payment therefor to the Owner; or

2. Deny liability in whole or in part and notify the Owner citing reasons therefor.

5. If the Surety does not proceed as provided in Article 4 with reasonable promptness, the Surety shall be deemed to be in default on this Bond fifteen days after receipt of an additional written notice from the Owner to the Surety demanding that the Surety perform its obligations under this Bond, and the Owner shall be entitled to enforce any remedy available to the Owner. If the Surety proceeds as provided in Paragraph 4.4, and the Owner refuses the payment tendered or the Surety has denied liability, in whole or in part, without further notice the Owner shall be entitled to enforce any remedy available to the Owner.

6. After the Owner has terminated the Contractor's right to complete the Work, and if the Surety elects to act under Paragraph 4.1, 4.2, or 4.3 above, then the responsibilities of the Surety to the Owner shall not be greater than those of the Contractor under the Agreement, and the responsibilities of the Owner to the Surety shall not be greater than those of the Owner under the Agreement. To the limit of the amount of this Bond, but subject to commitment by the Owner of the Balance of the Contract Price to mitigation of costs and damages on the Work, the Surety is obligated without duplication for:

6.1 The responsibilities of the Contractor for:

1. Completion of the Work, as defined in Article 1 of the General Conditions.

2. Correction of defective work during the one-year Correction Period, as defined in General Conditions' Paragraphs 13.07.A through 13.07.E and as modified by the Supplementary Conditions.

6.2 Additional legal, design, professional, and delay costs resulting from the Contractor's Default, and resulting from the actions or failure to act of the Surety under Article 4; and

6.3 Liquidated damages, or if no liquidated damages are specified in the Agreement, actual damages caused by delayed performance or non-performance of the Contractor.

7. The Surety shall not be liable to the Owner or others for obligations of the Contractor that are unrelated to the Work, and the Balance of the Contract Price shall not be reduced or set off on account of any such unrelated obligations. No right of action shall accrue on this Bond to any person or entity other than the Owner or its heirs, executors, administrators, or successors.

8. The Surety hereby waives notice of any change, including changes of time, to the Agreement or to related subcontracts, purchase orders, and other obligations.

9. Any proceeding, legal or equitable, under this Bond may be instituted in any court of competent jurisdiction in the location in which the Work or part of the Work is located and shall be instituted within two years after Contractor Default or within two years after the Contractor ceased working and within two years after the Surety refuses or fails to perform its obligations under this Bond, whichever occurs first. If the provisions of this Article are void or prohibited by law, the minimum period of limitation available to sureties as a defense in the jurisdiction of the suit shall be applicable.

10. Notice to the Surety, the Owner or the Contractor shall be mailed or delivered to the address shown on the front page.

11. When this Bond has been furnished to comply with a statutory or other legal requirement in the location where the construction was to be performed, any provision in this Bond conflicting with said statutory or legal requirement shall be deemed deleted herefrom and provisions conforming to such statutory or other legal requirement shall be deemed incorporated herein. The intent is that this Bond shall be construed as a statutory bond and not as a common law bond.

12. Definitions:

12.1 Balance of the Contract Price: The total amount payable by the Owner to the Contractor under the Agreement after all proper adjustments have been made, including allowance to the Contractor of any amounts received or to be received by the Owner in settlement of insurance or other claims for damages to which the Contractor is entitled, reduced by all valid and proper payments made to or on behalf of the Contractor under the Agreement.

12.2 Contractor Default: Failure of the Contractor, which has neither been remedied nor waived, to perform or otherwise to comply with the terms of the Agreement.

12.3 Owner Default: Failure of the Owner, which has neither been remedied nor waived, to pay the Contractor as required by the Agreement or to perform and complete or comply with the other terms thereof.

12.4 The terms used in this Performance Bond which are defined in the General Conditions have the meaning assigned to them in the General Conditions.

(If Contractor is an Individual)

Signature of Witness	Signature of Individual
	Trading and doing business as:
	Name of Business
	Address of Business

(If Bidder is a Limited Liability Company – All Members Must Sign)

	Name of Company
	Address of Company
Signature of Witness	Signature of Member
Signature of Witness	Signature of Member
Signature of Witness	Signature of Member

(If Contractor is a Partnership - All General Partners Must Sign)

Name of Partnership

Address of Partnership

Signature of Witness	Signature of Partner
Signature of Witness	Signature of Partner
Signature of Witness	Signature of Partner

(If Contractor is a Corporation)

ATTEST:

Name of Corporation

Signature of Secretary or Assistant Secretary	Address of Principal Office
(CORPORATE SEAL)	State of Incorporation
	Signature of President or Vice President

Type or print name below each signature.

(Corporation Surety)

Name of Corporation

Address of Office

Signature of Witness

Signature of Attorney-in-fact

Attach an appropriate power of attorney, dated as of the same date as the Bond, evidencing the authority of the Attorney-in-fact to act in behalf of the corporation.

Type or print name below each signature.

NOTE: Substitute Performance Bond Form is not acceptable. Failure to submit Bond on this form will be reason for rejection of Bid.

END OF PERFORMANCE BOND

DOCUMENT 00620

PAYMENT BOND

CONTRACTOR (Name and Address):

SURETY (Name and Address):

OWNER (Name and Address): **CITY OF ABERDEEN**
60 North Parke Street
P.O. Box 70
Aberdeen, MD 21001

AGREEMENT
Amount:
Project Identification: **ABERDEEN WATERMAIN EXTENSION**
CONTRACT NO. 21-12

CONTRACT IDENTIFICATION General Construction

BOND
Date:
Amount:

1. The Contractor and the Surety, jointly and severally, bind themselves, their heirs, executors, administrators, successors and assigns to the Owner to pay for labor, materials, and equipment furnished for use in the performance of the Work as defined by the Agreement, which is incorporated herein by reference.

2. With respect to the Owner, this obligation shall be null and void if the Contractor:

   2.1 Promptly makes payment, directly or indirectly, for all sums due Claimants, and

   2.2 Defends, indemnifies, and holds harmless the Owner from all claims, demands, liens, or suits by any person or entity who furnished labor, materials, or equipment for use in the performance of the Work, provided the Owner has promptly notified the Contractor and the Surety (at the address described in Article 12) of any claims, demands, liens, or suits and tendered defense of such claims, demands, liens, or suits to the Contractor and the Surety, and provided there is no Owner Default.

3. With respect to Claimants, this obligation shall be null and void if the Contractor promptly makes payment, directly or indirectly, for all sums due.

4. The Surety shall have no obligation to Claimants under this Bond until:

4.1 Claimants who are employed by or have a direct contract with the Contractor have given notice to the Surety (at the address described in Article 12) and sent a copy, or notice thereof, to the Owner, stating that a claim is being made under this Bond and, with substantial accuracy, the amount of the claim.

4.2 Claimants who do not have a direct contract with the Contractor:

1. Have furnished written notice to the Contractor and sent a copy, or notice thereof, to the Owner, within 90 days after having last performed labor or last furnished materials or equipment included in the claim stating, with substantial accuracy, the amount of the claim and the name of the party to whom the materials were furnished or supplied or for whom the labor was done or performed; and

2. Have either received a rejection in whole or in part from the Contractor, or not received within 30 days of furnishing the above notice any communication from the Contractor by which the Contractor has indicated the claim will be paid directly or indirectly; and

3. Not having been paid within the above 30 days, have sent a written notice to the Surety (at the address described in Article 12) and sent a copy, or notice thereof, to the Owner, stating that a claim is being made under this Bond and enclosing a copy of the previous written notice furnished to the Contractor.

5. If a notice required by Article 4 is given by the Owner to the Contractor or to the Surety, that is sufficient compliance.

6. When the Claimant has satisfied the conditions of Article 4, the Surety shall promptly and at the Surety's expense take the following actions.

6.1 Send an answer to the Claimant, with a copy to the Owner, within 60 days after receipt of the claim, stating the amounts that are undisputed and the basis for challenging any amounts that are disputed.

6.2 Pay or arrange for payment of any undisputed amounts.

6.3 The Surety’s failure to discharge its obligations under this Section 6 shall not be deemed to constitute a waiver of defenses the Surety or the Contractor may have or acquire as to a claim. However, if the Surety fails to discharge its obligations under this Section 6, the Surety shall indemnify the Claimant for the reasonable attorney’s fees the Claimant incurs to recover any sums found to be due and owing to the Claimant under this Section 6.

7. The Surety's total obligation shall not exceed the amount of this Bond, and the amount of this Bond shall be credited for any payments made in good faith by the Surety.

8. Amounts owed by the Owner to the Contractor under the Agreement shall be used for the performance of the Work and to satisfy claims, if any, under any Performance Bond. By the

Contractor furnishing and the Owner accepting this Bond, they agree that all funds earned by the Contractor in the performance of the Work are dedicated to satisfy obligations of the Contractor and the Surety under this Bond, subject to the Owner's priority to use the funds for the completion of the Work.

9. The Surety shall not be liable to the Owner, Claimants, or others for obligations of the Contractor that are unrelated to the Work. The Owner shall not be liable for payment of any costs or expenses of any Claimant under this Bond, and shall have under this Bond no obligations to make payments to, give notices on behalf of, or otherwise have obligations to Claimants under this Bond.

10. The Surety hereby waives notice of any change, including changes of time, to the Agreement or to related subcontracts, purchase orders, and other obligations.

11. No suit or action shall be commenced by a Claimant under this Bond other than in a court of competent jurisdiction in the location in which the Work or part of the Work is located or after the expiration of one year from the date (1) on which the Claimant gave the notice required by Paragraphs 4.2.3 or 4.1, or (2) on which the last labor or service was performed by anyone or the last materials or equipment were furnished by anyone under the Agreement, whichever of (1) or (2) first occurs. If the provisions of this Paragraph are void or prohibited by law, the minimum period of limitation available to sureties as a defense in the jurisdiction of the suit shall be applicable.

12. Notice to the surety, the Owner, or the Contractor shall be mailed or delivered to the address shown on the front page. Actual receipt of notice by Surety, the Owner, or the Contractor, however accomplished, shall be sufficient compliance as of the date received at the address shown on the front page.

13. When this Bond has been furnished to comply with a statutory or other legal requirement in the location where the construction was to be performed, any provision in this Bond conflicting with said statutory or legal requirement shall be deemed deleted herefrom and provisions conforming to such statutory or other legal requirement shall be deemed incorporated herein. The intent is that this Bond shall be construed as a statutory bond and not as a common law bond.

14. Upon request by any person or entity appearing to be a potential beneficiary of this Bond, the Contractor shall promptly furnish a copy of this Bond or shall permit a copy to be made.

15. Definitions:

15.1 Claimant: An individual or entity having a direct contract with the Contractor or with a subcontractor of the Contractor to furnish labor, materials, or equipment for use in the performance of the Work. The intent of this Bond shall be to include without limitation in the terms "labor, materials, or equipment" that part of water, gas, power, light, heat, oil, gasoline, telephone service, or rental equipment used in the Work, architectural and engineering services required for performance of the Work of the Contractor and the Contractor's subcontractors, and all other items for which a

mechanic's lien may be asserted in the jurisdiction where the labor, materials, or equipment were furnished.

15.2 Owner Default: Failure of the Owner, which has neither been remedied nor waived, to pay the Contractor as required by the Agreement or to perform and complete or comply with the other terms thereof.

15.3 The terms used in this Payment Bond which are defined in the General Conditions have the same meaning assigned to them in the General Conditions.

(If Contractor is an Individual)

Signature of Witness	Signature of Individual

Trading and doing business as:

Name of Business

Address of Business

(If Bidder is a Limited Liability Company – All Members Must Sign)

Name of Company

Address of Company

Signature of Witness	Signature of Member
Signature of Witness	Signature of Member
Signature of Witness	Signature of Member

(If Contractor is a Partnership - All General Partners Must Sign)

	Name of Partnership
	Address of Partnership
Signature of Witness	Signature of Partner
Signature of Witness	Signature of Partner
Signature of Witness	Signature of Partner

(If Contractor is a Corporation)

ATTEST:

	Name of Corporation
Signature of Secretary or Assistant Secretary	Address of Principal Office
(CORPORATE SEAL)	State of Incorporation
	Signature of President or Vice President

Type or print name below each signature.

(Corporation Surety)

Name of Corporation

Address of Office

Signature of Witness

Signature of Attorney-in-fact

Attach an appropriate power of attorney, dated as of the same date as the Bond, evidencing the authority of the Attorney-in-fact to act in behalf of the corporation.

Type or print name below each signature.

NOTE: Substitute Payment Bond Form is not acceptable. Failure to submit Bond on this form will be reason for rejection of Bid.

END OF PAYMENT BOND

This document has important legal consequences; consultation with an attorney is encouraged with respect to its use or modification. This document should be adapted to the particular circumstances of the contemplated Project and the controlling Laws and Regulations.

STANDARD GENERAL CONDITIONS OF THE CONSTRUCTION CONTRACT

Prepared by

EJCDC®
ENGINEERS JOINT CONTRACT DOCUMENTS COMMITTEE

Issued and Published Jointly by

ACEC
AMERICAN COUNCIL OF ENGINEERING COMPANIES

ASCE
AMERICAN SOCIETY OF CIVIL ENGINEERS

National Society of Professional Engineers®

EJCDC® C-700, Standard General Conditions of the Construction Contract.
Copyright © 2013 National Society of Professional Engineers, American Council of Engineering Companies, and American Society of Civil Engineers. All rights reserved.

These General Conditions have been prepared for use with the Agreement Between Owner and Contractor for Construction Contract (EJCDC® C-520, Stipulated Sum, or C-525, Cost-Plus, 2013 Editions). Their provisions are interrelated and a change in one may necessitate a change in the other.

To prepare Supplementary Conditions that are coordinated with the General Conditions, use EJCDC's Guide to the Preparation of Supplementary Conditions (EJCDC® C-800, 2013 Edition). The full EJCDC Construction series of documents is discussed in the Commentary on the 2013 EJCDC Construction Documents (EJCDC® C-001, 2013 Edition).

Copyright © 2013:

National Society of Professional Engineers

1420 King Street, Alexandria, VA 22314-2794

(703) 684-2882

www.nspe.org

American Council of Engineering Companies

1015 15th Street N.W., Washington, DC 20005

(202) 347-7474

www.acec.org

American Society of Civil Engineers

1801 Alexander Bell Drive, Reston, VA 20191-4400

(800) 548-2723

www.asce.org

The copyright for this document is owned jointly by the three sponsoring organizations listed above. The National Society of Professional Engineers is the Copyright Administrator for the EJCDC documents; please direct all inquiries regarding EJCDC copyrights to NSPE.

NOTE: EJCDC publications may be purchased at www.ejcdc.org, or from any of the sponsoring organizations above.

Copyright © 2013 National Society of Professional Engineers, American Council of Engineering Companies, and American Society of Civil Engineers. All rights reserved.

STANDARD GENERAL CONDITIONS OF THE CONSTRUCTION CONTRACT

TABLE OF CONTENTS

Page

Article 1 – Definitions and Terminology 1

1.01 Defined Terms 1

1.02 Terminology 5

Article 2 – Preliminary Matters 6

2.01 Delivery of Bonds and Evidence of Insurance 6

2.02 Copies of Documents 6

2.03 Before Starting Construction 6

2.04 Preconstruction Conference; Designation of Authorized Representatives 7

2.05 Initial Acceptance of Schedules 7

2.06 Electronic Transmittals 7

Article 3 – Documents: Intent, Requirements, Reuse 8

3.01 Intent 8

3.02 Reference Standards 8

3.03 Reporting and Resolving Discrepancies 8

3.04 Requirements of the Contract Documents 9

3.05 Reuse of Documents 10

Article 4 – Commencement and Progress of the Work 10

4.01 Commencement of Contract Times; Notice to Proceed 10

4.02 Starting the Work 10

4.03 Reference Points 10

4.04 Progress Schedule 10

4.05 Delays in Contractor's Progress 11

Article 5 – Availability of Lands; Subsurface and Physical Conditions; Hazardous Environmental Conditions 12

5.01 Availability of Lands 12

5.02 Use of Site and Other Areas 12

5.03 Subsurface and Physical Conditions 13

5.04 Differing Subsurface or Physical Conditions 14

5.05 Underground Facilities 15

Copyright © 2013 National Society of Professional Engineers, American Council of Engineering Companies, and American Society of Civil Engineers. All rights reserved.

5.06 Hazardous Environmental Conditions at Site 17
Article 6 – Bonds and Insurance 19
6.01 Performance, Payment, and Other Bonds 19
6.02 Insurance—General Provisions 19
6.03 Contractor's Insurance 20
6.04 Owner's Liability Insurance 23
6.05 Property Insurance 23
6.06 Waiver of Rights 25
6.07 Receipt and Application of Property Insurance Proceeds 25
Article 7 – Contractor's Responsibilities 26
7.01 Supervision and Superintendence 26
7.02 Labor; Working Hours 26
7.03 Services, Materials, and Equipment 26
7.04 "Or Equals" 27
7.05 Substitutes 28
7.06 Concerning Subcontractors, Suppliers, and Others 29
7.07 Patent Fees and Royalties 31
7.08 Permits 31
7.09 Taxes 32
7.10 Laws and Regulations 32
7.11 Record Documents 32
7.12 Safety and Protection 32
7.13 Safety Representative 33
7.14 Hazard Communication Programs 33
7.15 Emergencies 34
7.16 Shop Drawings, Samples, and Other Submittals 34
7.17 Contractor's General Warranty and Guarantee 36
7.18 Indemnification 37
7.19 Delegation of Professional Design Services 37
Article 8 – Other Work at the Site 38
8.01 Other Work 38
8.02 Coordination 39
8.03 Legal Relationships 39

Copyright © 2013 National Society of Professional Engineers, American Council of Engineering Companies, and American Society of Civil Engineers. All rights reserved.

Article 9 – Owner's Responsibilities 40
9.01 Communications to Contractor 40
9.02 Replacement of Engineer 40
9.03 Furnish Data 40
9.04 Pay When Due 40
9.05 Lands and Easements; Reports, Tests, and Drawings 40
9.06 Insurance 40
9.07 Change Orders 40
9.08 Inspections, Tests, and Approvals 41
9.09 Limitations on Owner's Responsibilities 41
9.10 Undisclosed Hazardous Environmental Condition 41
9.11 Evidence of Financial Arrangements 41
9.12 Safety Programs 41
Article 10 – Engineer's Status During Construction 41
10.01 Owner's Representative 41
10.02 Visits to Site 41
10.03 Project Representative 42
10.04 Rejecting Defective Work 42
10.05 Shop Drawings, Change Orders and Payments 42
10.06 Determinations for Unit Price Work 42
10.07 Decisions on Requirements of Contract Documents and Acceptability of Work 42
10.08 Limitations on Engineer's Authority and Responsibilities 42
10.09 Compliance with Safety Program 43
Article 11 – Amending the Contract Documents; Changes in the Work 43
11.01 Amending and Supplementing Contract Documents 43
11.02 Owner-Authorized Changes in the Work 44
11.03 Unauthorized Changes in the Work 44
11.04 Change of Contract Price 44
11.05 Change of Contract Times 45
11.06 Change Proposals 45
11.07 Execution of Change Orders 46
11.08 Notification to Surety 47
Article 12 – Claims 47

Copyright © 2013 National Society of Professional Engineers, American Council of Engineering Companies, and American Society of Civil Engineers. All rights reserved.

12.01 Claims 47
Article 13 – Cost of the Work; Allowances; Unit Price Work 48
13.01 Cost of the Work 48
13.02 Allowances 50
13.03 Unit Price Work 51
Article 14 – Tests and Inspections; Correction, Removal or Acceptance of Defective Work 52
14.01 Access to Work 52
14.02 Tests, Inspections, and Approvals 52
14.03 Defective Work 53
14.04 Acceptance of Defective Work 53
14.05 Uncovering Work 53
14.06 Owner May Stop the Work 54
14.07 Owner May Correct Defective Work 54
Article 15 – Payments to Contractor; Set-Offs; Completion; Correction Period 55
15.01 Progress Payments 55
15.02 Contractor's Warranty of Title 58
15.03 Substantial Completion 58
15.04 Partial Use or Occupancy 59
15.05 Final Inspection 59
15.06 Final Payment 59
15.07 Waiver of Claims 61
15.08 Correction Period 61
Article 16 – Suspension of Work and Termination 62
16.01 Owner May Suspend Work 62
16.02 Owner May Terminate for Cause 62
16.03 Owner May Terminate For Convenience 63
16.04 Contractor May Stop Work or Terminate 63
Article 17 – Final Resolution of Disputes 64
17.01 Methods and Procedures 64
Article 18 – Miscellaneous 64
18.01 Giving Notice 64
18.02 Computation of Times 64
18.03 Cumulative Remedies 64

Copyright © 2013 National Society of Professional Engineers, American Council of Engineering Companies, and American Society of Civil Engineers. All rights reserved.

18.04 Limitation of Damages 65
18.05 No Waiver 65
18.06 Survival of Obligations 65
18.07 Controlling Law 65
18.08 Headings 65

Copyright © 2013 National Society of Professional Engineers, American Council of Engineering Companies, and American Society of Civil Engineers. All rights reserved.

ARTICLE 1 – DEFINITIONS AND TERMINOLOGY

1.01 *Defined Terms*

A. Wherever used in the Bidding Requirements or Contract Documents, a term printed with initial capital letters, including the term's singular and plural forms, will have the meaning indicated in the definitions below. In addition to terms specifically defined, terms with initial capital letters in the Contract Documents include references to identified articles and paragraphs, and the titles of other documents or forms.

1. *Addenda*—Written or graphic instruments issued prior to the opening of Bids which clarify, correct, or change the Bidding Requirements or the proposed Contract Documents.

2. *Agreement*—The written instrument, executed by Owner and Contractor, that sets forth the Contract Price and Contract Times, identifies the parties and the Engineer, and designates the specific items that are Contract Documents.

3. *Application for Payment*—The form acceptable to Engineer which is to be used by Contractor during the course of the Work in requesting progress or final payments and which is to be accompanied by such supporting documentation as is required by the Contract Documents.

4. *Bid*—The offer of a Bidder submitted on the prescribed form setting forth the prices for the Work to be performed.

5. *Bidder*—An individual or entity that submits a Bid to Owner.

6. *Bidding Documents*—The Bidding Requirements, the proposed Contract Documents, and all Addenda.

7. *Bidding Requirements*—The advertisement or invitation to bid, Instructions to Bidders, Bid Bond or other Bid security, if any, the Bid Form, and the Bid with any attachments.

8. *Change Order*—A document which is signed by Contractor and Owner and authorizes an addition, deletion, or revision in the Work or an adjustment in the Contract Price or the Contract Times, or other revision to the Contract, issued on or after the Effective Date of the Contract.

9. *Change Proposal*—A written request by Contractor, duly submitted in compliance with the procedural requirements set forth herein, seeking an adjustment in Contract Price or Contract Times, or both; contesting an initial decision by Engineer concerning the requirements of the Contract Documents or the acceptability of Work under the Contract Documents; challenging a set-off against payments due; or seeking other relief with respect to the terms of the Contract.

10. *Claim*—(a) A demand or assertion by Owner directly to Contractor, duly submitted in compliance with the procedural requirements set forth herein: seeking an adjustment of Contract Price or Contract Times, or both; contesting an initial decision by Engineer concerning the requirements of the Contract Documents or the acceptability of Work under the Contract Documents; contesting Engineer's decision regarding a Change Proposal; seeking resolution of a contractual issue that Engineer has declined to address; or seeking other relief with respect to the terms of the Contract; or (b) a demand or assertion by Contractor directly to Owner, duly submitted in compliance with the procedural requirements set forth herein, contesting Engineer's decision regarding a Change Proposal; or seeking resolution of a contractual issue that Engineer

Copyright © 2013 National Society of Professional Engineers, American Council of Engineering Companies, and American Society of Civil Engineers. All rights reserved.

has declined to address. A demand for money or services by a third party is not a Claim.

11. *Constituent of Concern*—Asbestos, petroleum, radioactive materials, polychlorinated biphenyls (PCBs), hazardous waste, and any substance, product, waste, or other material of any nature whatsoever that is or becomes listed, regulated, or addressed pursuant to (a) the Comprehensive Environmental Response, Compensation and Liability Act, 42 U.S.C. §§9601 et seq. ("CERCLA"); (b) the Hazardous Materials Transportation Act, 49 U.S.C. §§5501 et seq.; (c) the Resource Conservation and Recovery Act, 42 U.S.C. §§6901 et seq. ("RCRA"); (d) the Toxic Substances Control Act, 15 U.S.C. §§2601 et seq.; (e) the Clean Water Act, 33 U.S.C. §§1251 et seq.; (f) the Clean Air Act, 42 U.S.C. §§7401 et seq.; or (g) any other federal, state, or local statute, law, rule, regulation, ordinance, resolution, code, order, or decree regulating, relating to, or imposing liability or standards of conduct concerning, any hazardous, toxic, or dangerous waste, substance, or material.

12. *Contract*—The entire and integrated written contract between the Owner and Contractor concerning the Work.

13. *Contract Documents*—Those items so designated in the Agreement, and which together comprise the Contract.

14. *Contract Price*—The money that Owner has agreed to pay Contractor for completion of the Work in accordance with the Contract Documents. .

15. *Contract Times*—The number of days or the dates by which Contractor shall: (a) achieve Milestones, if any; (b) achieve Substantial Completion; and (c) complete the Work.

16. *Contractor*—The individual or entity with which Owner has contracted for performance of the Work.

17. *Cost of the Work*—See Paragraph 13.01 for definition.

18. *Drawings*—The part of the Contract that graphically shows the scope, extent, and character of the Work to be performed by Contractor.

19. *Effective Date of the Contract*—The date, indicated in the Agreement, on which the Contract becomes effective.

20. *Engineer*—The individual or entity named as such in the Agreement.

21. *Field Order*—A written order issued by Engineer which requires minor changes in the Work but does not change the Contract Price or the Contract Times.

22. *Hazardous Environmental Condition*—The presence at the Site of Constituents of Concern in such quantities or circumstances that may present a danger to persons or property exposed thereto. The presence at the Site of materials that are necessary for the execution of the Work, or that are to be incorporated in the Work, and that are controlled and contained pursuant to industry practices, Laws and Regulations, and the requirements of the Contract, does not establish a Hazardous Environmental Condition.

23. *Laws and Regulations; Laws or Regulations*—Any and all applicable laws, statutes, rules, regulations, ordinances, codes, and orders of any and all governmental bodies, agencies, authorities, and courts having jurisdiction.

Copyright © 2013 National Society of Professional Engineers, American Council of Engineering Companies, and American Society of Civil Engineers. All rights reserved.

24. *Liens*—Charges, security interests, or encumbrances upon Contract-related funds, real property, or personal property.

25. *Milestone*—A principal event in the performance of the Work that the Contract requires Contractor to achieve by an intermediate completion date or by a time prior to Substantial Completion of all the Work.

26. *Notice of Award*—The written notice by Owner to a Bidder of Owner's acceptance of the Bid.

27. *Notice to Proceed*—A written notice by Owner to Contractor fixing the date on which the Contract Times will commence to run and on which Contractor shall start to perform the Work.

28. *Owner*—The individual or entity with which Contractor has contracted regarding the Work, and which has agreed to pay Contractor for the performance of the Work, pursuant to the terms of the Contract.

29. *Progress Schedule*—A schedule, prepared and maintained by Contractor, describing the sequence and duration of the activities comprising the Contractor's plan to accomplish the Work within the Contract Times.

30. *Project*—The total undertaking to be accomplished for Owner by engineers, contractors, and others, including planning, study, design, construction, testing, commissioning, and start-up, and of which the Work to be performed under the Contract Documents is a part.

31. *Project Manual*—The written documents prepared for, or made available for, procuring and constructing the Work, including but not limited to the Bidding Documents or other construction procurement documents, geotechnical and existing conditions information, the Agreement, bond forms, General Conditions, Supplementary Conditions, and Specifications. The contents of the Project Manual may be bound in one or more volumes.

32. *Resident Project Representative*—The authorized representative of Engineer assigned to assist Engineer at the Site. As used herein, the term Resident Project Representative or "RPR" includes any assistants or field staff of Resident Project Representative.

33. *Samples*—Physical examples of materials, equipment, or workmanship that are representative of some portion of the Work and that establish the standards by which such portion of the Work will be judged.

34. *Schedule of Submittals*—A schedule, prepared and maintained by Contractor, of required submittals and the time requirements for Engineer's review of the submittals and the performance of related construction activities.

35. *Schedule of Values*—A schedule, prepared and maintained by Contractor, allocating portions of the Contract Price to various portions of the Work and used as the basis for reviewing Contractor's Applications for Payment.

36. *Shop Drawings*—All drawings, diagrams, illustrations, schedules, and other data or information that are specifically prepared or assembled by or for Contractor and submitted by Contractor to illustrate some portion of the Work. Shop Drawings, whether approved or not, are not Drawings and are not Contract Documents.

Copyright © 2013 National Society of Professional Engineers, American Council of Engineering Companies, and American Society of Civil Engineers. All rights reserved.

37. *Site*—Lands or areas indicated in the Contract Documents as being furnished by Owner upon which the Work is to be performed, including rights-of-way and easements, and such other lands furnished by Owner which are designated for the use of Contractor.

38. *Specifications*—The part of the Contract that consists of written requirements for materials, equipment, systems, standards, and workmanship as applied to the Work, and certain administrative requirements and procedural matters applicable to the Work.

39. *Subcontractor*—An individual or entity having a direct contract with Contractor or with any other Subcontractor for the performance of a part of the Work.

40. *Substantial Completion*—The time at which the Work (or a specified part thereof) has progressed to the point where, in the opinion of Engineer, the Work (or a specified part thereof) is sufficiently complete, in accordance with the Contract Documents, so that the Work (or a specified part thereof) can be utilized for the purposes for which it is intended. The terms "substantially complete" and "substantially completed" as applied to all or part of the Work refer to Substantial Completion thereof.

41. *Successful Bidder*—The Bidder whose Bid the Owner accepts, and to which the Owner makes an award of contract, subject to stated conditions.

42. *Supplementary Conditions*—The part of the Contract that amends or supplements these General Conditions.

43. *Supplier*—A manufacturer, fabricator, supplier, distributor, materialman, or vendor having a direct contract with Contractor or with any Subcontractor to furnish materials or equipment to be incorporated in the Work by Contractor or a Subcontractor.

44. *Technical Data*—Those items expressly identified as Technical Data in the Supplementary Conditions, with respect to either (a) subsurface conditions at the Site, or physical conditions relating to existing surface or subsurface structures at the Site (except Underground Facilities) or (b) Hazardous Environmental Conditions at the Site. If no such express identifications of Technical Data have been made with respect to conditions at the Site, then the data contained in boring logs, recorded measurements of subsurface water levels, laboratory test results, and other factual, objective information regarding conditions at the Site that are set forth in any geotechnical or environmental report prepared for the Project and made available to Contractor are hereby defined as Technical Data with respect to conditions at the Site under Paragraphs 5.03, 5.04, and 5.06.

45. *Underground Facilities*—All underground pipelines, conduits, ducts, cables, wires, manholes, vaults, tanks, tunnels, or other such facilities or attachments, and any encasements containing such facilities, including but not limited to those that convey electricity, gases, steam, liquid petroleum products, telephone or other communications, fiber optic transmissions, cable television, water, wastewater, storm water, other liquids or chemicals, or traffic or other control systems.

46. *Unit Price Work*—Work to be paid for on the basis of unit prices.

47. *Work*—The entire construction or the various separately identifiable parts thereof required to be provided under the Contract Documents. Work includes and is the result of performing or providing all labor, services, and documentation necessary to produce such construction; furnishing, installing, and incorporating all materials and equipment into such construction; and may include related services such as testing, start-up, and commissioning, all as required by the Contract Documents.

Copyright © 2013 National Society of Professional Engineers, American Council of Engineering Companies, and American Society of Civil Engineers. All rights reserved.

48. *Work Change Directive*—A written directive to Contractor issued on or after the Effective Date of the Contract, signed by Owner and recommended by Engineer, ordering an addition, deletion, or revision in the Work.

1.02 *Terminology*

A. The words and terms discussed in the following paragraphs are not defined but, when used in the Bidding Requirements or Contract Documents, have the indicated meaning.

B. *Intent of Certain Terms or Adjectives*:

1. The Contract Documents include the terms "as allowed," "as approved," "as ordered," "as directed" or terms of like effect or import to authorize an exercise of professional judgment by Engineer. In addition, the adjectives "reasonable," "suitable," "acceptable," "proper," "satisfactory," or adjectives of like effect or import are used to describe an action or determination of Engineer as to the Work. It is intended that such exercise of professional judgment, action, or determination will be solely to evaluate, in general, the Work for compliance with the information in the Contract Documents and with the design concept of the Project as a functioning whole as shown or indicated in the Contract Documents (unless there is a specific statement indicating otherwise). The use of any such term or adjective is not intended to and shall not be effective to assign to Engineer any duty or authority to supervise or direct the performance of the Work, or any duty or authority to undertake responsibility contrary to the provisions of Article 10 or any other provision of the Contract Documents.

C. *Day*:

1. The word "day" means a calendar day of 24 hours measured from midnight to the next midnight.

D. *Defective*:

1. The word "defective," when modifying the word "Work," refers to Work that is unsatisfactory, faulty, or deficient in that it:

a. does not conform to the Contract Documents; or

b. does not meet the requirements of any applicable inspection, reference standard, test, or approval referred to in the Contract Documents; or

c. has been damaged prior to Engineer's recommendation of final payment (unless responsibility for the protection thereof has been assumed by Owner at Substantial Completion in accordance with Paragraph 15.03 or 15.04).

E. *Furnish, Install, Perform, Provide*:

1. The word "furnish," when used in connection with services, materials, or equipment, shall mean to supply and deliver said services, materials, or equipment to the Site (or some other specified location) ready for use or installation and in usable or operable condition.

2. The word "install," when used in connection with services, materials, or equipment, shall mean to put into use or place in final position said services, materials, or equipment complete and ready for intended use.

Copyright © 2013 National Society of Professional Engineers, American Council of Engineering Companies, and American Society of Civil Engineers. All rights reserved.

3. The words “perform” or “provide,” when used in connection with services, materials, or equipment, shall mean to furnish and install said services, materials, or equipment complete and ready for intended use.

4. If the Contract Documents establish an obligation of Contractor with respect to specific services, materials, or equipment, but do not expressly use any of the four words “furnish,” “install,” “perform,” or “provide,” then Contractor shall furnish and install said services, materials, or equipment complete and ready for intended use.

F. Unless stated otherwise in the Contract Documents, words or phrases that have a well-known technical or construction industry or trade meaning are used in the Contract Documents in accordance with such recognized meaning.

ARTICLE 2 – PRELIMINARY MATTERS

2.01 *Delivery of Bonds and Evidence of Insurance*

A. *Bonds*: When Contractor delivers the executed counterparts of the Agreement to Owner, Contractor shall also deliver to Owner such bonds as Contractor may be required to furnish.

B. *Evidence of Contractor’s Insurance*: When Contractor delivers the executed counterparts of the Agreement to Owner, Contractor shall also deliver to Owner, with copies to each named insured and additional insured (as identified in the Supplementary Conditions or elsewhere in the Contract), the certificates and other evidence of insurance required to be provided by Contractor in accordance with Article 6.

C. *Evidence of Owner’s Insurance*: After receipt of the executed counterparts of the Agreement and all required bonds and insurance documentation, Owner shall promptly deliver to Contractor, with copies to each named insured and additional insured (as identified in the Supplementary Conditions or otherwise), the certificates and other evidence of insurance required to be provided by Owner under Article 6.

2.02 *Copies of Documents*

A. Owner shall furnish to Contractor four printed copies of the Contract (including one fully executed counterpart of the Agreement), and one copy in electronic portable document format (PDF). Additional printed copies will be furnished upon request at the cost of reproduction.

B. Owner shall maintain and safeguard at least one original printed record version of the Contract, including Drawings and Specifications signed and sealed by Engineer and other design professionals. Owner shall make such original printed record version of the Contract available to Contractor for review. Owner may delegate the responsibilities under this provision to Engineer.

2.03 *Before Starting Construction*

A. *Preliminary Schedules*: Within 10 days after the Effective Date of the Contract (or as otherwise specifically required by the Contract Documents), Contractor shall submit to Engineer for timely review:

1. a preliminary Progress Schedule indicating the times (numbers of days or dates) for starting and completing the various stages of the Work, including any Milestones specified in the Contract;

2. a preliminary Schedule of Submittals; and

Copyright © 2013 National Society of Professional Engineers, American Council of Engineering Companies, and American Society of Civil Engineers. All rights reserved.

3. a preliminary Schedule of Values for all of the Work which includes quantities and prices of items which when added together equal the Contract Price and subdivides the Work into component parts in sufficient detail to serve as the basis for progress payments during performance of the Work. Such prices will include an appropriate amount of overhead and profit applicable to each item of Work.

2.04 *Preconstruction Conference; Designation of Authorized Representatives*

A. Before any Work at the Site is started, a conference attended by Owner, Contractor, Engineer, and others as appropriate will be held to establish a working understanding among the parties as to the Work and to discuss the schedules referred to in Paragraph 2.03.A, procedures for handling Shop Drawings, Samples, and other submittals, processing Applications for Payment, electronic or digital transmittals, and maintaining required records.

B. At this conference Owner and Contractor each shall designate, in writing, a specific individual to act as its authorized representative with respect to the services and responsibilities under the Contract. Such individuals shall have the authority to transmit and receive information, render decisions relative to the Contract, and otherwise act on behalf of each respective party.

2.05 *Initial Acceptance of Schedules*

A. At least 10 days before submission of the first Application for Payment a conference, attended by Contractor, Engineer, and others as appropriate, will be held to review for acceptability to Engineer as provided below the schedules submitted in accordance with Paragraph 2.03.A. Contractor shall have an additional 10 days to make corrections and adjustments and to complete and resubmit the schedules. No progress payment shall be made to Contractor until acceptable schedules are submitted to Engineer.

1. The Progress Schedule will be acceptable to Engineer if it provides an orderly progression of the Work to completion within the Contract Times. Such acceptance will not impose on Engineer responsibility for the Progress Schedule, for sequencing, scheduling, or progress of the Work, nor interfere with or relieve Contractor from Contractor's full responsibility therefor.

2. Contractor's Schedule of Submittals will be acceptable to Engineer if it provides a workable arrangement for reviewing and processing the required submittals.

3. Contractor's Schedule of Values will be acceptable to Engineer as to form and substance if it provides a reasonable allocation of the Contract Price to the component parts of the Work.

2.06 *Electronic Transmittals*

A. Except as otherwise stated elsewhere in the Contract, the Owner, Engineer, and Contractor may transmit, and shall accept, Project-related correspondence, text, data, documents, drawings, information, and graphics, including but not limited to Shop Drawings and other submittals, in electronic media or digital format, either directly, or through access to a secure Project website.

B. If the Contract does not establish protocols for electronic or digital transmittals, then Owner, Engineer, and Contractor shall jointly develop such protocols.

C. When transmitting items in electronic media or digital format, the transmitting party makes no representations as to long term compatibility, usability, or readability of the items resulting from the recipient's use of software application packages, operating systems, or

Copyright © 2013 National Society of Professional Engineers, American Council of Engineering Companies, and American Society of Civil Engineers. All rights reserved.

computer hardware differing from those used in the drafting or transmittal of the items, or from those established in applicable transmittal protocols.

ARTICLE 3 – DOCUMENTS: INTENT, REQUIREMENTS, REUSE

3.01 *Intent*

A. The Contract Documents are complementary; what is required by one is as binding as if required by all.

B. It is the intent of the Contract Documents to describe a functionally complete project (or part thereof) to be constructed in accordance with the Contract Documents.

C. Unless otherwise stated in the Contract Documents, if there is a discrepancy between the electronic or digital versions of the Contract Documents (including any printed copies derived from such electronic or digital versions) and the printed record version, the printed record version shall govern.

D. The Contract supersedes prior negotiations, representations, and agreements, whether written or oral.

E. Engineer will issue clarifications and interpretations of the Contract Documents as provided herein.

3.02 *Reference Standards*

A. Standards Specifications, Codes, Laws and Regulations

1. Reference in the Contract Documents to Standard Specifications, Manuals, Reference Standards, or Codes of any technical society, organization, or association, or to Laws or Regulations, whether such reference be specific or by implication, shall mean the standard specification, manual, reference standard, code, or Laws or Regulations in effect at the time of opening of Bids (or on the Effective Date of the Contract if there were no Bids), except as may be otherwise specifically stated in the Contract Documents.

2. No provision of any such standard specification, manual, reference standard, or code, or any instruction of a Supplier, shall be effective to change the duties or responsibilities of Owner, Contractor, or Engineer, or any of their Subcontractors, consultants, agents, or employees, from those set forth in the part of the Contract Documents prepared by or for Engineer. No such provision or instruction shall be effective to assign to Owner, Engineer, or any of their officers, directors, members, partners, employees, agents, consultants, or subcontractors, any duty or authority to supervise or direct the performance of the Work or any duty or authority to undertake responsibility inconsistent with the provisions of the part of the Contract Documents prepared by or for Engineer.

3.03 *Reporting and Resolving Discrepancies*

A. *Reporting Discrepancies*:

1. *Contractor's Verification of Figures and Field Measurements*: Before undertaking each part of the Work, Contractor shall carefully study the Contract Documents, and check and verify pertinent figures and dimensions therein, particularly with respect to applicable field measurements. Contractor shall promptly report in writing to Engineer any conflict, error, ambiguity, or discrepancy that Contractor discovers, or has actual knowledge of, and shall not proceed with any Work affected thereby until the conflict,

Copyright © 2013 National Society of Professional Engineers, American Council of Engineering Companies, and American Society of Civil Engineers. All rights reserved.

error, ambiguity, or discrepancy is resolved, by a clarification or interpretation by Engineer, or by an amendment or supplement to the Contract Documents issued pursuant to Paragraph 11.01.

2. *Contractor's Review of Contract Documents*: If, before or during the performance of the Work, Contractor discovers any conflict, error, ambiguity, or discrepancy within the Contract Documents, or between the Contract Documents and (a) any applicable Law or Regulation, (b) actual field conditions, (c) any standard specification, manual, reference standard, or code, or (d) any instruction of any Supplier, then Contractor shall promptly report it to Engineer in writing. Contractor shall not proceed with the Work affected thereby (except in an emergency as required by Paragraph 7.15) until the conflict, error, ambiguity, or discrepancy is resolved, by a clarification or interpretation by Engineer, or by an amendment or supplement to the Contract Documents issued pursuant to Paragraph 11.01.

3. Contractor shall not be liable to Owner or Engineer for failure to report any conflict, error, ambiguity, or discrepancy in the Contract Documents unless Contractor had actual knowledge thereof.

B. *Resolving Discrepancies*:

1. Except as may be otherwise specifically stated in the Contract Documents, the provisions of the part of the Contract Documents prepared by or for Engineer shall take precedence in resolving any conflict, error, ambiguity, or discrepancy between such provisions of the Contract Documents and:

a. the provisions of any standard specification, manual, reference standard, or code, or the instruction of any Supplier (whether or not specifically incorporated by reference as a Contract Document); or

b. the provisions of any Laws or Regulations applicable to the performance of the Work (unless such an interpretation of the provisions of the Contract Documents would result in violation of such Law or Regulation).

3.04 *Requirements of the Contract Documents*

A. During the performance of the Work and until final payment, Contractor and Owner shall submit to the Engineer all matters in question concerning the requirements of the Contract Documents (sometimes referred to as requests for information or interpretation—RFIs), or relating to the acceptability of the Work under the Contract Documents, as soon as possible after such matters arise. Engineer will be the initial interpreter of the requirements of the Contract Documents, and judge of the acceptability of the Work thereunder.

B. Engineer will, with reasonable promptness, render a written clarification, interpretation, or decision on the issue submitted, or initiate an amendment or supplement to the Contract Documents. Engineer's written clarification, interpretation, or decision will be final and binding on Contractor, unless it appeals by submitting a Change Proposal, and on Owner, unless it appeals by filing a Claim.

C. If a submitted matter in question concerns terms and conditions of the Contract Documents that do not involve (1) the performance or acceptability of the Work under the Contract Documents, (2) the design (as set forth in the Drawings, Specifications, or otherwise), or (3) other engineering or technical matters, then Engineer will promptly give written notice to Owner and Contractor that Engineer is unable to provide a decision or interpretation. If Owner and Contractor are unable to agree on resolution of such a matter in question, either party may pursue resolution as provided in Article 12.

Copyright © 2013 National Society of Professional Engineers, American Council of Engineering Companies, and American Society of Civil Engineers. All rights reserved.

3.05 *Reuse of Documents*

A. Contractor and its Subcontractors and Suppliers shall not:

1. have or acquire any title to or ownership rights in any of the Drawings, Specifications, or other documents (or copies of any thereof) prepared by or bearing the seal of Engineer or its consultants, including electronic media editions, or reuse any such Drawings, Specifications, other documents, or copies thereof on extensions of the Project or any other project without written consent of Owner and Engineer and specific written verification or adaptation by Engineer; or

2. have or acquire any title or ownership rights in any other Contract Documents, reuse any such Contract Documents for any purpose without Owner's express written consent, or violate any copyrights pertaining to such Contract Documents.

B. The prohibitions of this Paragraph 3.05 will survive final payment, or termination of the Contract. Nothing herein shall preclude Contractor from retaining copies of the Contract Documents for record purposes.

ARTICLE 4 – COMMENCEMENT AND PROGRESS OF THE WORK

4.01 *Commencement of Contract Times; Notice to Proceed*

A. The Contract Times will commence to run on the thirtieth day after the Effective Date of the Contract or, if a Notice to Proceed is given, on the day indicated in the Notice to Proceed. A Notice to Proceed may be given at any time within 30 days after the Effective Date of the Contract. In no event will the Contract Times commence to run later than the sixtieth day after the day of Bid opening or the thirtieth day after the Effective Date of the Contract, whichever date is earlier.

4.02 *Starting the Work*

A. Contractor shall start to perform the Work on the date when the Contract Times commence to run. No Work shall be done at the Site prior to such date.

4.03 *Reference Points*

A. Owner shall provide engineering surveys to establish reference points for construction which in Engineer's judgment are necessary to enable Contractor to proceed with the Work. Contractor shall be responsible for laying out the Work, shall protect and preserve the established reference points and property monuments, and shall make no changes or relocations without the prior written approval of Owner. Contractor shall report to Engineer whenever any reference point or property monument is lost or destroyed or requires relocation because of necessary changes in grades or locations, and shall be responsible for the accurate replacement or relocation of such reference points or property monuments by professionally qualified personnel.

4.04 *Progress Schedule*

A. Contractor shall adhere to the Progress Schedule established in accordance with Paragraph 2.05 as it may be adjusted from time to time as provided below.

1. Contractor shall submit to Engineer for acceptance (to the extent indicated in Paragraph 2.05) proposed adjustments in the Progress Schedule that will not result in changing the Contract Times.

Copyright © 2013 National Society of Professional Engineers, American Council of Engineering Companies, and American Society of Civil Engineers. All rights reserved.

2. Proposed adjustments in the Progress Schedule that will change the Contract Times shall be submitted in accordance with the requirements of Article 11.

B. Contractor shall carry on the Work and adhere to the Progress Schedule during all disputes or disagreements with Owner. No Work shall be delayed or postponed pending resolution of any disputes or disagreements, or during any appeal process, except as permitted by Paragraph 16.04, or as Owner and Contractor may otherwise agree in writing.

4.05 *Delays in Contractor's Progress*

A. If Owner, Engineer, or anyone for whom Owner is responsible, delays, disrupts, or interferes with the performance or progress of the Work, then Contractor shall be entitled to an equitable adjustment in the Contract Times and Contract Price. Contractor's entitlement to an adjustment of the Contract Times is conditioned on such adjustment being essential to Contractor's ability to complete the Work within the Contract Times.

B. Contractor shall not be entitled to an adjustment in Contract Price or Contract Times for delay, disruption, or interference caused by or within the control of Contractor. Delay, disruption, and interference attributable to and within the control of a Subcontractor or Supplier shall be deemed to be within the control of Contractor.

C. If Contractor's performance or progress is delayed, disrupted, or interfered with by unanticipated causes not the fault of and beyond the control of Owner, Contractor, and those for which they are responsible, then Contractor shall be entitled to an equitable adjustment in Contract Times. Contractor's entitlement to an adjustment of the Contract Times is conditioned on such adjustment being essential to Contractor's ability to complete the Work within the Contract Times. Such an adjustment shall be Contractor's sole and exclusive remedy for the delays, disruption, and interference described in this paragraph. Causes of delay, disruption, or interference that may give rise to an adjustment in Contract Times under this paragraph include but are not limited to the following:

1. severe and unavoidable natural catastrophes such as fires, floods, epidemics, and earthquakes;

2. abnormal weather conditions;

3. acts or failures to act of utility owners (other than those performing other work at or adjacent to the Site by arrangement with the Owner, as contemplated in Article 8); and

4. acts of war or terrorism.

D. Delays, disruption, and interference to the performance or progress of the Work resulting from the existence of a differing subsurface or physical condition, an Underground Facility that was not shown or indicated by the Contract Documents, or not shown or indicated with reasonable accuracy, and those resulting from Hazardous Environmental Conditions, are governed by Article 5.

E. Paragraph 8.03 governs delays, disruption, and interference to the performance or progress of the Work resulting from the performance of certain other Work at or adjacent to the Site.

F. Contractor shall not be entitled to an adjustment in Contract Price or Contract Times for any delay, disruption, or interference if such delay is concurrent with a delay, disruption, or interference caused by or within the control of Contractor.

Copyright © 2013 National Society of Professional Engineers, American Council of Engineering Companies, and American Society of Civil Engineers. All rights reserved.

G. Contractor must submit any Change Proposal seeking an adjustment in Contract Price or Contract Times under this paragraph within 30 days of the commencement of the delaying, disrupting, or interfering event.

ARTICLE 5 – AVAILABILITY OF LANDS; SUBSURFACE AND PHYSICAL CONDITIONS; HAZARDOUS ENVIRONMENTAL CONDITIONS

5.01 *Availability of Lands*

A. Owner shall furnish the Site. Owner shall notify Contractor of any encumbrances or restrictions not of general application but specifically related to use of the Site with which Contractor must comply in performing the Work.

B. Upon reasonable written request, Owner shall furnish Contractor with a current statement of record legal title and legal description of the lands upon which permanent improvements are to be made and Owner's interest therein as necessary for giving notice of or filing a mechanic's or construction lien against such lands in accordance with applicable Laws and Regulations.

C. Contractor shall provide for all additional lands and access thereto that may be required for temporary construction facilities or storage of materials and equipment.

5.02 *Use of Site and Other Areas*

A. *Limitation on Use of Site and Other Areas*:

1. Contractor shall confine construction equipment, temporary construction facilities, the storage of materials and equipment, and the operations of workers to the Site, adjacent areas that Contractor has arranged to use through construction easements or otherwise, and other adjacent areas permitted by Laws and Regulations, and shall not unreasonably encumber the Site and such other adjacent areas with construction equipment or other materials or equipment. Contractor shall assume full responsibility for (a) damage to the Site; (b) damage to any such other adjacent areas used for Contractor's operations; (c) damage to any other adjacent land or areas; and (d) for injuries and losses sustained by the owners or occupants of any such land or areas; provided that such damage or injuries result from the performance of the Work or from other actions or conduct of the Contractor or those for which Contractor is responsible.

2. If a damage or injury claim is made by the owner or occupant of any such land or area because of the performance of the Work, or because of other actions or conduct of the Contractor or those for which Contractor is responsible, Contractor shall (a) take immediate corrective or remedial action as required by Paragraph 7.12, or otherwise; (b) promptly attempt to settle the claim as to all parties through negotiations with such owner or occupant, or otherwise resolve the claim by arbitration or other dispute resolution proceeding, or at law; and (c) to the fullest extent permitted by Laws and Regulations, indemnify and hold harmless Owner and Engineer, and the officers, directors, members, partners, employees, agents, consultants and subcontractors of each and any of them from and against any such claim, and against all costs, losses, and damages (including but not limited to all fees and charges of engineers, architects, attorneys, and other professionals and all court or arbitration or other dispute resolution costs) arising out of or relating to any claim or action, legal or equitable, brought by any such owner or occupant against Owner, Engineer, or any other party indemnified hereunder to the extent caused directly or indirectly, in whole or in part

Copyright © 2013 National Society of Professional Engineers, American Council of Engineering Companies, and American Society of Civil Engineers. All rights reserved.

by, or based upon, Contractor's performance of the Work, or because of other actions or conduct of the Contractor or those for which Contractor is responsible.

B. *Removal of Debris During Performance of the Work*: During the progress of the Work the Contractor shall keep the Site and other adjacent areas free from accumulations of waste materials, rubbish, and other debris. Removal and disposal of such waste materials, rubbish, and other debris shall conform to applicable Laws and Regulations.

C. *Cleaning*: Prior to Substantial Completion of the Work Contractor shall clean the Site and the Work and make it ready for utilization by Owner. At the completion of the Work Contractor shall remove from the Site and adjacent areas all tools, appliances, construction equipment and machinery, and surplus materials and shall restore to original condition all property not designated for alteration by the Contract Documents.

D. *Loading of Structures*: Contractor shall not load nor permit any part of any structure to be loaded in any manner that will endanger the structure, nor shall Contractor subject any part of the Work or adjacent structures or land to stresses or pressures that will endanger them.

5.03 *Subsurface and Physical Conditions*

A. *Reports and Drawings*: The Supplementary Conditions identify:

1. those reports known to Owner of explorations and tests of subsurface conditions at or adjacent to the Site;

2. those drawings known to Owner of physical conditions relating to existing surface or subsurface structures at the Site (except Underground Facilities); and

3. Technical Data contained in such reports and drawings.

B. *Reliance by Contractor on Technical Data Authorized*: Contractor may rely upon the accuracy of the Technical Data expressly identified in the Supplementary Conditions with respect to such reports and drawings, but such reports and drawings are not Contract Documents. If no such express identification has been made, then Contractor may rely upon the accuracy of the Technical Data (as defined in Article 1) contained in any geotechnical or environmental report prepared for the Project and made available to Contractor. Except for such reliance on Technical Data, Contractor may not rely upon or make any claim against Owner or Engineer, or any of their officers, directors, members, partners, employees, agents, consultants, or subcontractors, with respect to:

1. the completeness of such reports and drawings for Contractor's purposes, including, but not limited to, any aspects of the means, methods, techniques, sequences, and procedures of construction to be employed by Contractor, and safety precautions and programs incident thereto; or

2. other data, interpretations, opinions, and information contained in such reports or shown or indicated in such drawings; or

3. any Contractor interpretation of or conclusion drawn from any Technical Data or any such other data, interpretations, opinions, or information.

Copyright © 2013 National Society of Professional Engineers, American Council of Engineering Companies, and American Society of Civil Engineers. All rights reserved.

5.04 *Differing Subsurface or Physical Conditions*

A. *Notice by Contractor*: If Contractor believes that any subsurface or physical condition that is uncovered or revealed at the Site either:

1. is of such a nature as to establish that any Technical Data on which Contractor is entitled to rely as provided in Paragraph 5.03 is materially inaccurate; or

2. is of such a nature as to require a change in the Drawings or Specifications; or

3. differs materially from that shown or indicated in the Contract Documents; or

4. is of an unusual nature, and differs materially from conditions ordinarily encountered and generally recognized as inherent in Work of the character provided for in the Contract Documents;

then Contractor shall, promptly after becoming aware thereof and before further disturbing the subsurface or physical conditions or performing any Work in connection therewith (except in an emergency as required by Paragraph 7.15), notify Owner and Engineer in writing about such condition. Contractor shall not further disturb such condition or perform any Work in connection therewith (except with respect to an emergency) until receipt of a written statement permitting Contractor to do so.

B. *Engineer's Review*: After receipt of written notice as required by the preceding paragraph, Engineer will promptly review the subsurface or physical condition in question; determine the necessity of Owner's obtaining additional exploration or tests with respect to the condition; conclude whether the condition falls within any one or more of the differing site condition categories in Paragraph 5.04.A above; obtain any pertinent cost or schedule information from Contractor; prepare recommendations to Owner regarding the Contractor's resumption of Work in connection with the subsurface or physical condition in question and the need for any change in the Drawings or Specifications; and advise Owner in writing of Engineer's findings, conclusions, and recommendations.

C. *Owner's Statement to Contractor Regarding Site Condition*: After receipt of Engineer's written findings, conclusions, and recommendations, Owner shall issue a written statement to Contractor (with a copy to Engineer) regarding the subsurface or physical condition in question, addressing the resumption of Work in connection with such condition, indicating whether any change in the Drawings or Specifications will be made, and adopting or rejecting Engineer's written findings, conclusions, and recommendations, in whole or in part.

D. *Possible Price and Times Adjustments*:

1. Contractor shall be entitled to an equitable adjustment in Contract Price or Contract Times, or both, to the extent that the existence of a differing subsurface or physical condition, or any related delay, disruption, or interference, causes an increase or decrease in Contractor's cost of, or time required for, performance of the Work; subject, however, to the following:

a. such condition must fall within any one or more of the categories described in Paragraph 5.04.A;

b. with respect to Work that is paid for on a unit price basis, any adjustment in Contract Price will be subject to the provisions of Paragraph 13.03; and,

Copyright © 2013 National Society of Professional Engineers, American Council of Engineering Companies, and American Society of Civil Engineers. All rights reserved.

c. Contractor's entitlement to an adjustment of the Contract Times is conditioned on such adjustment being essential to Contractor's ability to complete the Work within the Contract Times.

2. Contractor shall not be entitled to any adjustment in the Contract Price or Contract Times with respect to a subsurface or physical condition if:

a. Contractor knew of the existence of such condition at the time Contractor made a commitment to Owner with respect to Contract Price and Contract Times by the submission of a Bid or becoming bound under a negotiated contract, or otherwise; or

b. the existence of such condition reasonably could have been discovered or revealed as a result of any examination, investigation, exploration, test, or study of the Site and contiguous areas expressly required by the Bidding Requirements or Contract Documents to be conducted by or for Contractor prior to Contractor's making such commitment; or

c. Contractor failed to give the written notice as required by Paragraph 5.04.A.

3. If Owner and Contractor agree regarding Contractor's entitlement to and the amount or extent of any adjustment in the Contract Price or Contract Times, or both, then any such adjustment shall be set forth in a Change Order.

4. Contractor may submit a Change Proposal regarding its entitlement to or the amount or extent of any adjustment in the Contract Price or Contract Times, or both, no later than 30 days after Owner's issuance of the Owner's written statement to Contractor regarding the subsurface or physical condition in question.

5.05 *Underground Facilities*

A. *Contractor's Responsibilities*: The information and data shown or indicated in the Contract Documents with respect to existing Underground Facilities at or adjacent to the Site is based on information and data furnished to Owner or Engineer by the owners of such Underground Facilities, including Owner, or by others. Unless it is otherwise expressly provided in the Supplementary Conditions:

1. Owner and Engineer do not warrant or guarantee the accuracy or completeness of any such information or data provided by others; and

2. the cost of all of the following will be included in the Contract Price, and Contractor shall have full responsibility for:

a. reviewing and checking all information and data regarding existing Underground Facilities at the Site;

b. locating all Underground Facilities shown or indicated in the Contract Documents as being at the Site;

c. coordination of the Work with the owners (including Owner) of such Underground Facilities, during construction; and

d. the safety and protection of all existing Underground Facilities at the Site, and repairing any damage thereto resulting from the Work.

B. *Notice by Contractor*: If Contractor believes that an Underground Facility that is uncovered or revealed at the Site was not shown or indicated in the Contract Documents, or was not shown or indicated with reasonable accuracy, then Contractor shall, promptly after

Copyright © 2013 National Society of Professional Engineers, American Council of Engineering Companies, and American Society of Civil Engineers. All rights reserved.

becoming aware thereof and before further disturbing conditions affected thereby or performing any Work in connection therewith (except in an emergency as required by Paragraph 7.15), identify the owner of such Underground Facility and give written notice to that owner and to Owner and Engineer.

C. *Engineer's Review*: Engineer will promptly review the Underground Facility and conclude whether such Underground Facility was not shown or indicated in the Contract Documents, or was not shown or indicated with reasonable accuracy; obtain any pertinent cost or schedule information from Contractor; prepare recommendations to Owner regarding the Contractor's resumption of Work in connection with the Underground Facility in question; determine the extent, if any, to which a change is required in the Drawings or Specifications to reflect and document the consequences of the existence or location of the Underground Facility; and advise Owner in writing of Engineer's findings, conclusions, and recommendations. During such time, Contractor shall be responsible for the safety and protection of such Underground Facility.

D. *Owner's Statement to Contractor Regarding Underground Facility*: After receipt of Engineer's written findings, conclusions, and recommendations, Owner shall issue a written statement to Contractor (with a copy to Engineer) regarding the Underground Facility in question, addressing the resumption of Work in connection with such Underground Facility, indicating whether any change in the Drawings or Specifications will be made, and adopting or rejecting Engineer's written findings, conclusions, and recommendations in whole or in part.

E. *Possible Price and Times Adjustments*:

1. Contractor shall be entitled to an equitable adjustment in the Contract Price or Contract Times, or both, to the extent that any existing Underground Facility at the Site that was not shown or indicated in the Contract Documents, or was not shown or indicated with reasonable accuracy, or any related delay, disruption, or interference, causes an increase or decrease in Contractor's cost of, or time required for, performance of the Work; subject, however, to the following:

    a. Contractor did not know of and could not reasonably have been expected to be aware of or to have anticipated the existence or actual location of the Underground Facility in question;

    b. With respect to Work that is paid for on a unit price basis, any adjustment in Contract Price will be subject to the provisions of Paragraph 13.03;

    c. Contractor's entitlement to an adjustment of the Contract Times is conditioned on such adjustment being essential to Contractor's ability to complete the Work within the Contract Times; and

    d. Contractor gave the notice required in Paragraph 5.05.B.

2. If Owner and Contractor agree regarding Contractor's entitlement to and the amount or extent of any adjustment in the Contract Price or Contract Times, or both, then any such adjustment shall be set forth in a Change Order.

3. Contractor may submit a Change Proposal regarding its entitlement to or the amount or extent of any adjustment in the Contract Price or Contract Times, or both, no later than 30 days after Owner's issuance of the Owner's written statement to Contractor regarding the Underground Facility in question.

Copyright © 2013 National Society of Professional Engineers, American Council of Engineering Companies, and American Society of Civil Engineers. All rights reserved.

5.06 *Hazardous Environmental Conditions at Site*

A. *Reports and Drawings*: The Supplementary Conditions identify:

1. those reports and drawings known to Owner relating to Hazardous Environmental Conditions that have been identified at or adjacent to the Site; and

2. Technical Data contained in such reports and drawings.

B. *Reliance by Contractor on Technical Data Authorized*: Contractor may rely upon the accuracy of the Technical Data expressly identified in the Supplementary Conditions with respect to such reports and drawings, but such reports and drawings are not Contract Documents. If no such express identification has been made, then Contractor may rely on the accuracy of the Technical Data (as defined in Article 1) contained in any geotechnical or environmental report prepared for the Project and made available to Contractor. Except for such reliance on Technical Data, Contractor may not rely upon or make any claim against Owner or Engineer, or any of their officers, directors, members, partners, employees, agents, consultants, or subcontractors with respect to:

1. the completeness of such reports and drawings for Contractor's purposes, including, but not limited to, any aspects of the means, methods, techniques, sequences and procedures of construction to be employed by Contractor and safety precautions and programs incident thereto; or

2. other data, interpretations, opinions and information contained in such reports or shown or indicated in such drawings; or

3. any Contractor interpretation of or conclusion drawn from any Technical Data or any such other data, interpretations, opinions or information.

C. Contractor shall not be responsible for removing or remediating any Hazardous Environmental Condition encountered, uncovered, or revealed at the Site unless such removal or remediation is expressly identified in the Contract Documents to be within the scope of the Work.

D. Contractor shall be responsible for controlling, containing, and duly removing all Constituents of Concern brought to the Site by Contractor, Subcontractors, Suppliers, or anyone else for whom Contractor is responsible, and for any associated costs; and for the costs of removing and remediating any Hazardous Environmental Condition created by the presence of any such Constituents of Concern.

E. If Contractor encounters, uncovers, or reveals a Hazardous Environmental Condition whose removal or remediation is not expressly identified in the Contract Documents as being within the scope of the Work, or if Contractor or anyone for whom Contractor is responsible creates a Hazardous Environmental Condition, then Contractor shall immediately: (1) secure or otherwise isolate such condition; (2) stop all Work in connection with such condition and in any area affected thereby (except in an emergency as required by Paragraph 7.15); and (3) notify Owner and Engineer (and promptly thereafter confirm such notice in writing). Owner shall promptly consult with Engineer concerning the necessity for Owner to retain a qualified expert to evaluate such condition or take corrective action, if any. Promptly after consulting with Engineer, Owner shall take such actions as are necessary to permit Owner to timely obtain required permits and provide Contractor the written notice required by Paragraph 5.06.F. If Contractor or anyone for whom Contractor is responsible created the Hazardous Environmental Condition in question, then Owner may remove and remediate the Hazardous Environmental Condition, and impose a set-off against payments to account for the associated costs.

Copyright © 2013 National Society of Professional Engineers, American Council of Engineering Companies, and American Society of Civil Engineers. All rights reserved.

F. Contractor shall not resume Work in connection with such Hazardous Environmental Condition or in any affected area until after Owner has obtained any required permits related thereto, and delivered written notice to Contractor either (1) specifying that such condition and any affected area is or has been rendered safe for the resumption of Work, or (2) specifying any special conditions under which such Work may be resumed safely.

G. If Owner and Contractor cannot agree as to entitlement to or on the amount or extent, if any, of any adjustment in Contract Price or Contract Times, or both, as a result of such Work stoppage or such special conditions under which Work is agreed to be resumed by Contractor, then within 30 days of Owner's written notice regarding the resumption of Work, Contractor may submit a Change Proposal, or Owner may impose a set-off.

H. If after receipt of such written notice Contractor does not agree to resume such Work based on a reasonable belief it is unsafe, or does not agree to resume such Work under such special conditions, then Owner may order the portion of the Work that is in the area affected by such condition to be deleted from the Work, following the contractual change procedures in Article 11. Owner may have such deleted portion of the Work performed by Owner's own forces or others in accordance with Article 8.

I. To the fullest extent permitted by Laws and Regulations, Owner shall indemnify and hold harmless Contractor, Subcontractors, and Engineer, and the officers, directors, members, partners, employees, agents, consultants, and subcontractors of each and any of them from and against all claims, costs, losses, and damages (including but not limited to all fees and charges of engineers, architects, attorneys, and other professionals and all court or arbitration or other dispute resolution costs) arising out of or relating to a Hazardous Environmental Condition, provided that such Hazardous Environmental Condition (1) was not shown or indicated in the Drawings, Specifications, or other Contract Documents, identified as Technical Data entitled to limited reliance pursuant to Paragraph 5.06.B, or identified in the Contract Documents to be included within the scope of the Work, and (2) was not created by Contractor or by anyone for whom Contractor is responsible. Nothing in this Paragraph 5.06.H shall obligate Owner to indemnify any individual or entity from and against the consequences of that individual's or entity's own negligence.

J. To the fullest extent permitted by Laws and Regulations, Contractor shall indemnify and hold harmless Owner and Engineer, and the officers, directors, members, partners, employees, agents, consultants, and subcontractors of each and any of them from and against all claims, costs, losses, and damages (including but not limited to all fees and charges of engineers, architects, attorneys, and other professionals and all court or arbitration or other dispute resolution costs) arising out of or relating to the failure to control, contain, or remove a Constituent of Concern brought to the Site by Contractor or by anyone for whom Contractor is responsible, or to a Hazardous Environmental Condition created by Contractor or by anyone for whom Contractor is responsible. Nothing in this Paragraph 5.06.J shall obligate Contractor to indemnify any individual or entity from and against the consequences of that individual's or entity's own negligence.

K. The provisions of Paragraphs 5.03, 5.04, and 5.05 do not apply to the presence of Constituents of Concern or to a Hazardous Environmental Condition uncovered or revealed at the Site.

Copyright © 2013 National Society of Professional Engineers, American Council of Engineering Companies, and American Society of Civil Engineers. All rights reserved.

ARTICLE 6 – BONDS AND INSURANCE

6.01 *Performance, Payment, and Other Bonds*

A. Contractor shall furnish a performance bond and a payment bond, each in an amount at least equal to the Contract Price, as security for the faithful performance and payment of all of Contractor's obligations under the Contract. These bonds shall remain in effect until one year after the date when final payment becomes due or until completion of the correction period specified in Paragraph 15.08, whichever is later, except as provided otherwise by Laws or Regulations, the Supplementary Conditions, or other specific provisions of the Contract. Contractor shall also furnish such other bonds as are required by the Supplementary Conditions or other specific provisions of the Contract.

B. All bonds shall be in the form prescribed by the Contract except as provided otherwise by Laws or Regulations, and shall be executed by such sureties as are named in "Companies Holding Certificates of Authority as Acceptable Sureties on Federal Bonds and as Acceptable Reinsuring Companies" as published in Circular 570 (as amended and supplemented) by the Financial Management Service, Surety Bond Branch, U.S. Department of the Treasury. A bond signed by an agent or attorney-in-fact must be accompanied by a certified copy of that individual's authority to bind the surety. The evidence of authority shall show that it is effective on the date the agent or attorney-in-fact signed the accompanying bond.

C. Contractor shall obtain the required bonds from surety companies that are duly licensed or authorized in the jurisdiction in which the Project is located to issue bonds in the required amounts.

D. If the surety on a bond furnished by Contractor is declared bankrupt or becomes insolvent, or its right to do business is terminated in any state or jurisdiction where any part of the Project is located, or the surety ceases to meet the requirements above, then Contractor shall promptly notify Owner and Engineer and shall, within 20 days after the event giving rise to such notification, provide another bond and surety, both of which shall comply with the bond and surety requirements above.

E. If Contractor has failed to obtain a required bond, Owner may exclude the Contractor from the Site and exercise Owner's termination rights under Article 16.

F. Upon request, Owner shall provide a copy of the payment bond to any Subcontractor, Supplier, or other person or entity claiming to have furnished labor or materials used in the performance of the Work.

6.02 *Insurance—General Provisions*

A. Owner and Contractor shall obtain and maintain insurance as required in this Article and in the Supplementary Conditions.

B. All insurance required by the Contract to be purchased and maintained by Owner or Contractor shall be obtained from insurance companies that are duly licensed or authorized, in the state or jurisdiction in which the Project is located, to issue insurance policies for the required limits and coverages. Unless a different standard is indicated in the Supplementary Conditions, all companies that provide insurance policies required under this Contract shall have an A.M. Best rating of A-VII or better.

C. Contractor shall deliver to Owner, with copies to each named insured and additional insured (as identified in this Article, in the Supplementary Conditions, or elsewhere in the Contract), certificates of insurance establishing that Contractor has obtained and is

Copyright © 2013 National Society of Professional Engineers, American Council of Engineering Companies, and American Society of Civil Engineers. All rights reserved.

maintaining the policies, coverages, and endorsements required by the Contract. Upon request by Owner or any other insured, Contractor shall also furnish other evidence of such required insurance, including but not limited to copies of policies and endorsements, and documentation of applicable self-insured retentions and deductibles. Contractor may block out (redact) any confidential premium or pricing information contained in any policy or endorsement furnished under this provision.

D. Owner shall deliver to Contractor, with copies to each named insured and additional insured (as identified in this Article, the Supplementary Conditions, or elsewhere in the Contract), certificates of insurance establishing that Owner has obtained and is maintaining the policies, coverages, and endorsements required of Owner by the Contract (if any). Upon request by Contractor or any other insured, Owner shall also provide other evidence of such required insurance (if any), including but not limited to copies of policies and endorsements, and documentation of applicable self-insured retentions and deductibles. Owner may block out (redact) any confidential premium or pricing information contained in any policy or endorsement furnished under this provision.

E. Failure of Owner or Contractor to demand such certificates or other evidence of the other party's full compliance with these insurance requirements, or failure of Owner or Contractor to identify a deficiency in compliance from the evidence provided, shall not be construed as a waiver of the other party's obligation to obtain and maintain such insurance.

F. If either party does not purchase or maintain all of the insurance required of such party by the Contract, such party shall notify the other party in writing of such failure to purchase prior to the start of the Work, or of such failure to maintain prior to any change in the required coverage.

G. If Contractor has failed to obtain and maintain required insurance, Owner may exclude the Contractor from the Site, impose an appropriate set-off against payment, and exercise Owner's termination rights under Article 16.

H. Without prejudice to any other right or remedy, if a party has failed to obtain required insurance, the other party may elect to obtain equivalent insurance to protect such other party's interests at the expense of the party who was required to provide such coverage, and the Contract Price shall be adjusted accordingly.

I. Owner does not represent that insurance coverage and limits established in this Contract necessarily will be adequate to protect Contractor or Contractor's interests.

J. The insurance and insurance limits required herein shall not be deemed as a limitation on Contractor's liability under the indemnities granted to Owner and other individuals and entities in the Contract.

6.03 *Contractor's Insurance*

A. *Workers' Compensation*: Contractor shall purchase and maintain workers' compensation and employer's liability insurance for:

1. claims under workers' compensation, disability benefits, and other similar employee benefit acts.

2. United States Longshoreman and Harbor Workers' Compensation Act and Jones Act coverage (if applicable).

3. claims for damages because of bodily injury, occupational sickness or disease, or death of Contractor's employees (by stop-gap endorsement in monopolist worker's compensation states).

Copyright © 2013 National Society of Professional Engineers, American Council of Engineering Companies, and American Society of Civil Engineers. All rights reserved.

4. Foreign voluntary worker compensation (if applicable).

B. *Commercial General Liability—Claims Covered*: Contractor shall purchase and maintain commercial general liability insurance, covering all operations by or on behalf of Contractor, on an occurrence basis, against:

1. claims for damages because of bodily injury, sickness or disease, or death of any person other than Contractor's employees.

2. claims for damages insured by reasonably available personal injury liability coverage.

3. claims for damages, other than to the Work itself, because of injury to or destruction of tangible property wherever located, including loss of use resulting therefrom.

C. *Commercial General Liability—Form and Content*: Contractor's commercial liability policy shall be written on a 1996 (or later) ISO commercial general liability form (occurrence form) and include the following coverages and endorsements:

1. Products and completed operations coverage:

a. Such insurance shall be maintained for three years after final payment.

b. Contractor shall furnish Owner and each other additional insured (as identified in the Supplementary Conditions or elsewhere in the Contract) evidence of continuation of such insurance at final payment and three years thereafter.

2. Blanket contractual liability coverage, to the extent permitted by law, including but not limited to coverage of Contractor's contractual indemnity obligations in Paragraph 7.18.

3. Broad form property damage coverage.

4. Severability of interest.

5. Underground, explosion, and collapse coverage.

6. Personal injury coverage.

7. Additional insured endorsements that include both ongoing operations and products and completed operations coverage through ISO Endorsements CG 20 10 10 01 and CG 20 37 10 01 (together); or CG 20 10 07 04 and CG 20 37 07 04 (together); or their equivalent.

8. For design professional additional insureds, ISO Endorsement CG 20 32 07 04, "Additional Insured—Engineers, Architects or Surveyors Not Engaged by the Named Insured" or its equivalent.

D. *Automobile liability*: Contractor shall purchase and maintain automobile liability insurance against claims for damages because of bodily injury or death of any person or property damage arising out of the ownership, maintenance, or use of any motor vehicle. The automobile liability policy shall be written on an occurrence basis.

E. *Umbrella or excess liability*: Contractor shall purchase and maintain umbrella or excess liability insurance written over the underlying employer's liability, commercial general liability, and automobile liability insurance described in the paragraphs above. Subject to industry-standard exclusions, the coverage afforded shall follow form as to each and every one of the underlying policies.

F. *Contractor's pollution liability insurance*: Contractor shall purchase and maintain a policy covering third-party injury and property damage claims, including clean-up costs, as a result

Copyright © 2013 National Society of Professional Engineers, American Council of Engineering Companies, and American Society of Civil Engineers. All rights reserved.

of pollution conditions arising from Contractor's operations and completed operations. This insurance shall be maintained for no less than three years after final completion.

G. *Additional insureds*: The Contractor's commercial general liability, automobile liability, umbrella or excess, and pollution liability policies shall include and list as additional insureds Owner and Engineer, and any individuals or entities identified in the Supplementary Conditions; include coverage for the respective officers, directors, members, partners, employees, agents, consultants, and subcontractors of each and any of all such additional insureds; and the insurance afforded to these additional insureds shall provide primary coverage for all claims covered thereby (including as applicable those arising from both ongoing and completed operations) on a non-contributory basis. Contractor shall obtain all necessary endorsements to support these requirements.

H. *Contractor's professional liability insurance*: If Contractor will provide or furnish professional services under this Contract, through a delegation of professional design services or otherwise, then Contractor shall be responsible for purchasing and maintaining applicable professional liability insurance. This insurance shall provide protection against claims arising out of performance of professional design or related services, and caused by a negligent error, omission, or act for which the insured party is legally liable. It shall be maintained throughout the duration of the Contract and for a minimum of two years after Substantial Completion. If such professional design services are performed by a Subcontractor, and not by Contractor itself, then the requirements of this paragraph may be satisfied through the purchasing and maintenance of such insurance by such Subcontractor.

I. *General provisions*: The policies of insurance required by this Paragraph 6.03 shall:

1. include at least the specific coverages provided in this Article.

2. be written for not less than the limits of liability provided in this Article and in the Supplementary Conditions, or required by Laws or Regulations, whichever is greater.

3. contain a provision or endorsement that the coverage afforded will not be canceled, materially changed, or renewal refused until at least 10 days prior written notice has been given to Contractor. Within three days of receipt of any such written notice, Contractor shall provide a copy of the notice to Owner, Engineer, and each other insured under the policy.

4. remain in effect at least until final payment (and longer if expressly required in this Article) and at all times thereafter when Contractor may be correcting, removing, or replacing defective Work as a warranty or correction obligation, or otherwise, or returning to the Site to conduct other tasks arising from the Contract Documents.

5. be appropriate for the Work being performed and provide protection from claims that may arise out of or result from Contractor's performance of the Work and Contractor's other obligations under the Contract Documents, whether it is to be performed by Contractor, any Subcontractor or Supplier, or by anyone directly or indirectly employed by any of them to perform any of the Work, or by anyone for whose acts any of them may be liable.

J. The coverage requirements for specific policies of insurance must be met by such policies, and not by reference to excess or umbrella insurance provided in other policies.

Copyright © 2013 National Society of Professional Engineers, American Council of Engineering Companies, and American Society of Civil Engineers. All rights reserved.

6.04 *Owner's Liability Insurance*

A. In addition to the insurance required to be provided by Contractor under Paragraph 6.03, Owner, at Owner's option, may purchase and maintain at Owner's expense Owner's own liability insurance as will protect Owner against claims which may arise from operations under the Contract Documents.

B. Owner's liability policies, if any, operate separately and independently from policies required to be provided by Contractor, and Contractor cannot rely upon Owner's liability policies for any of Contractor's obligations to the Owner, Engineer, or third parties.

6.05 *Property Insurance*

A. *Builder's Risk*: Unless otherwise provided in the Supplementary Conditions, Contractor shall purchase and maintain builder's risk insurance upon the Work on a completed value basis, in the amount of the full insurable replacement cost thereof (subject to such deductible amounts as may be provided in the Supplementary Conditions or required by Laws and Regulations). This insurance shall:

1. include the Owner and Contractor as named insureds, and all Subcontractors, and any individuals or entities required by the Supplementary Conditions to be insured under such builder's risk policy, as insureds or named insureds. For purposes of the remainder of this Paragraph 6.05, Paragraphs 6.06 and 6.07, and any corresponding Supplementary Conditions, the parties required to be insured shall collectively be referred to as "insureds."

2. be written on a builder's risk "all risk" policy form that shall at least include insurance for physical loss or damage to the Work, temporary buildings, falsework, and materials and equipment in transit, and shall insure against at least the following perils or causes of loss: fire; lightning; windstorm; riot; civil commotion; terrorism; vehicle impact; aircraft; smoke; theft; vandalism and malicious mischief; mechanical breakdown, boiler explosion, and artificially generated electric current; earthquake; volcanic activity, and other earth movement; flood; collapse; explosion; debris removal; demolition occasioned by enforcement of Laws and Regulations; water damage (other than that caused by flood); and such other perils or causes of loss as may be specifically required by the Supplementary Conditions. If insurance against mechanical breakdown, boiler explosion, and artificially generated electric current; earthquake; volcanic activity, and other earth movement; or flood, are not commercially available under builder's risk policies, by endorsement or otherwise, such insurance may be provided through other insurance policies acceptable to Owner and Contractor.

3. cover, as insured property, at least the following: (a) the Work and all materials, supplies, machinery, apparatus, equipment, fixtures, and other property of a similar nature that are to be incorporated into or used in the preparation, fabrication, construction, erection, or completion of the Work, including Owner-furnished or assigned property; (b) spare parts inventory required within the scope of the Contract; and (c) temporary works which are not intended to form part of the permanent constructed Work but which are intended to provide working access to the Site, or to the Work under construction, or which are intended to provide temporary support for the Work under construction, including scaffolding, form work, fences, shoring, falsework, and temporary structures.

4. cover expenses incurred in the repair or replacement of any insured property (including but not limited to fees and charges of engineers and architects).

Copyright © 2013 National Society of Professional Engineers, American Council of Engineering Companies, and American Society of Civil Engineers. All rights reserved.

5. extend to cover damage or loss to insured property while in temporary storage at the Site or in a storage location outside the Site (but not including property stored at the premises of a manufacturer or Supplier).

6. extend to cover damage or loss to insured property while in transit.

7. allow for partial occupation or use of the Work by Owner, such that those portions of the Work that are not yet occupied or used by Owner shall remain covered by the builder's risk insurance.

8. allow for the waiver of the insurer's subrogation rights, as set forth below.

9. provide primary coverage for all losses and damages caused by the perils or causes of loss covered.

10. not include a co-insurance clause.

11. include an exception for ensuing losses from physical damage or loss with respect to any defective workmanship, design, or materials exclusions.

12. include performance/hot testing and start-up.

13. be maintained in effect, subject to the provisions herein regarding Substantial Completion and partial occupancy or use of the Work by Owner, until the Work is complete.

B. *Notice of Cancellation or Change*: All the policies of insurance (and the certificates or other evidence thereof) required to be purchased and maintained in accordance with this Paragraph 6.05 will contain a provision or endorsement that the coverage afforded will not be canceled or materially changed or renewal refused until at least 10 days prior written notice has been given to the purchasing policyholder. Within three days of receipt of any such written notice, the purchasing policyholder shall provide a copy of the notice to each other insured.

C. *Deductibles*: The purchaser of any required builder's risk or property insurance shall pay for costs not covered because of the application of a policy deductible.

D. *Partial Occupancy or Use by Owner*: If Owner will occupy or use a portion or portions of the Work prior to Substantial Completion of all the Work as provided in Paragraph 15.04, then Owner (directly, if it is the purchaser of the builder's risk policy, or through Contractor) will provide notice of such occupancy or use to the builder's risk insurer. The builder's risk insurance shall not be canceled or permitted to lapse on account of any such partial use or occupancy; rather, those portions of the Work that are occupied or used by Owner may come off the builder's risk policy, while those portions of the Work not yet occupied or used by Owner shall remain covered by the builder's risk insurance.

E. *Additional Insurance*: If Contractor elects to obtain other special insurance to be included in or supplement the builder's risk or property insurance policies provided under this Paragraph 6.05, it may do so at Contractor's expense.

F. *Insurance of Other Property*: If the express insurance provisions of the Contract do not require or address the insurance of a property item or interest, such as tools, construction equipment, or other personal property owned by Contractor, a Subcontractor, or an employee of Contractor or a Subcontractor, then the entity or individual owning such property item will be responsible for deciding whether to insure it, and if so in what amount.

Copyright © 2013 National Society of Professional Engineers, American Council of Engineering Companies, and American Society of Civil Engineers. All rights reserved.

6.06 *Waiver of Rights*

A. All policies purchased in accordance with Paragraph 6.05, expressly including the builder's risk policy, shall contain provisions to the effect that in the event of payment of any loss or damage the insurers will have no rights of recovery against any insureds thereunder, or against Engineer or its consultants, or their officers, directors, members, partners, employees, agents, consultants, or subcontractors. Owner and Contractor waive all rights against each other and the respective officers, directors, members, partners, employees, agents, consultants, and subcontractors of each and any of them, for all losses and damages caused by, arising out of, or resulting from any of the perils or causes of loss covered by such policies and any other property insurance applicable to the Work; and, in addition, waive all such rights against Engineer, its consultants, all Subcontractors, all individuals or entities identified in the Supplementary Conditions as insureds, and the officers, directors, members, partners, employees, agents, consultants, and subcontractors of each and any of them, under such policies for losses and damages so caused. None of the above waivers shall extend to the rights that any party making such waiver may have to the proceeds of insurance held by Owner or Contractor as trustee or fiduciary, or otherwise payable under any policy so issued.

B. Owner waives all rights against Contractor, Subcontractors, and Engineer, and the officers, directors, members, partners, employees, agents, consultants and subcontractors of each and any of them, for:

1. loss due to business interruption, loss of use, or other consequential loss extending beyond direct physical loss or damage to Owner's property or the Work caused by, arising out of, or resulting from fire or other perils whether or not insured by Owner; and

2. loss or damage to the completed Project or part thereof caused by, arising out of, or resulting from fire or other insured peril or cause of loss covered by any property insurance maintained on the completed Project or part thereof by Owner during partial occupancy or use pursuant to Paragraph 15.04, after Substantial Completion pursuant to Paragraph 15.03, or after final payment pursuant to Paragraph 15.06.

C. Any insurance policy maintained by Owner covering any loss, damage or consequential loss referred to in Paragraph 6.06.B shall contain provisions to the effect that in the event of payment of any such loss, damage, or consequential loss, the insurers will have no rights of recovery against Contractor, Subcontractors, or Engineer, or the officers, directors, members, partners, employees, agents, consultants, or subcontractors of each and any of them.

D. Contractor shall be responsible for assuring that the Agreement under which a Subcontractor performs a portion of the Work contains provisions whereby the Subcontractor waives all rights against Owner, Contractor, all individuals or entities identified in the Supplementary Conditions as insureds, the Engineer and its consultants, and the officers, directors, members, partners, employees, agents, consultants, and subcontractors of each and any of them, for all losses and damages caused by, arising out of, relating to, or resulting from any of the perils or causes of loss covered by builder's risk insurance and any other property insurance applicable to the Work.

6.07 *Receipt and Application of Property Insurance Proceeds*

A. Any insured loss under the builder's risk and other policies of insurance required by Paragraph 6.05 will be adjusted and settled with the named insured that purchased the

Copyright © 2013 National Society of Professional Engineers, American Council of Engineering Companies, and American Society of Civil Engineers. All rights reserved.

policy. Such named insured shall act as fiduciary for the other insureds, and give notice to such other insureds that adjustment and settlement of a claim is in progress. Any other insured may state its position regarding a claim for insured loss in writing within 15 days after notice of such claim.

B. Proceeds for such insured losses may be made payable by the insurer either jointly to multiple insureds, or to the named insured that purchased the policy in its own right and as fiduciary for other insureds, subject to the requirements of any applicable mortgage clause. A named insured receiving insurance proceeds under the builder's risk and other policies of insurance required by Paragraph 6.05 shall distribute such proceeds in accordance with such Agreement as the parties in interest may reach, or as otherwise required under the dispute resolution provisions of this Contract or applicable Laws and Regulations.

C. If no other special Agreement is reached, the damaged Work shall be repaired or replaced, the money so received applied on account thereof, and the Work and the cost thereof covered by Change Order, if needed.

ARTICLE 7 – CONTRACTOR'S RESPONSIBILITIES

7.01 *Supervision and Superintendence*

A. Contractor shall supervise, inspect, and direct the Work competently and efficiently, devoting such attention thereto and applying such skills and expertise as may be necessary to perform the Work in accordance with the Contract Documents. Contractor shall be solely responsible for the means, methods, techniques, sequences, and procedures of construction.

B. At all times during the progress of the Work, Contractor shall assign a competent resident superintendent who shall not be replaced without written notice to Owner and Engineer except under extraordinary circumstances.

7.02 *Labor; Working Hours*

A. Contractor shall provide competent, suitably qualified personnel to survey and lay out the Work and perform construction as required by the Contract Documents. Contractor shall at all times maintain good discipline and order at the Site.

B. Except as otherwise required for the safety or protection of persons or the Work or property at the Site or adjacent thereto, and except as otherwise stated in the Contract Documents, all Work at the Site shall be performed during regular working hours, Monday through Friday. Contractor will not perform Work on a Saturday, Sunday, or any legal holiday. Contractor may perform Work outside regular working hours or on Saturdays, Sundays, or legal holidays only with Owner's written consent, which will not be unreasonably withheld.

7.03 *Services, Materials, and Equipment*

A. Unless otherwise specified in the Contract Documents, Contractor shall provide and assume full responsibility for all services, materials, equipment, labor, transportation, construction equipment and machinery, tools, appliances, fuel, power, light, heat, telephone, water, sanitary facilities, temporary facilities, and all other facilities and incidentals necessary for the performance, testing, start up, and completion of the Work, whether or not such items are specifically called for in the Contract Documents.

B. All materials and equipment incorporated into the Work shall be of good quality and new, except as otherwise provided in the Contract Documents. All special warranties and

Copyright © 2013 National Society of Professional Engineers, American Council of Engineering Companies, and American Society of Civil Engineers. All rights reserved.

guarantees required by the Specifications shall expressly run to the benefit of Owner. If required by Engineer, Contractor shall furnish satisfactory evidence (including reports of required tests) as to the source, kind, and quality of materials and equipment.

C. All materials and equipment shall be stored, applied, installed, connected, erected, protected, used, cleaned, and conditioned in accordance with instructions of the applicable Supplier, except as otherwise may be provided in the Contract Documents.

7.04 *"Or Equals"*

A. Whenever an item of material or equipment is specified or described in the Contract Documents by using the name of a proprietary item or the name of a particular Supplier, the Contract Price has been based upon Contractor furnishing such item as specified. The specification or description of such an item is intended to establish the type, function, appearance, and quality required. Unless the specification or description contains or is followed by words reading that no like, equivalent, or "or equal" item is permitted, Contractor may request that Engineer authorize the use of other items of material or equipment, or items from other proposed suppliers under the circumstances described below.

1. If Engineer in its sole discretion determines that an item of material or equipment proposed by Contractor is functionally equal to that named and sufficiently similar so that no change in related Work will be required, Engineer shall deem it an "or equal" item. For the purposes of this paragraph, a proposed item of material or equipment will be considered functionally equal to an item so named if:

a. in the exercise of reasonable judgment Engineer determines that:

1) it is at least equal in materials of construction, quality, durability, appearance, strength, and design characteristics;

2) it will reliably perform at least equally well the function and achieve the results imposed by the design concept of the completed Project as a functioning whole;

3) it has a proven record of performance and availability of responsive service; and

4) it is not objectionable to Owner.

b. Contractor certifies that, if approved and incorporated into the Work:

1) there will be no increase in cost to the Owner or increase in Contract Times; and

2) it will conform substantially to the detailed requirements of the item named in the Contract Documents.

B. *Contractor's Expense*: Contractor shall provide all data in support of any proposed "or equal" item at Contractor's expense.

C. *Engineer's Evaluation and Determination*: Engineer will be allowed a reasonable time to evaluate each "or-equal" request. Engineer may require Contractor to furnish additional data about the proposed "or-equal" item. Engineer will be the sole judge of acceptability. No "or-equal" item will be ordered, furnished, installed, or utilized until Engineer's review is complete and Engineer determines that the proposed item is an "or-equal", which will be evidenced by an approved Shop Drawing or other written communication. Engineer will advise Contractor in writing of any negative determination.

Copyright © 2013 National Society of Professional Engineers, American Council of Engineering Companies, and American Society of Civil Engineers. All rights reserved.

D. *Effect of Engineer's Determination*: Neither approval nor denial of an "or-equal" request shall result in any change in Contract Price. The Engineer's denial of an "or-equal" request shall be final and binding, and may not be reversed through an appeal under any provision of the Contract Documents.

E. *Treatment as a Substitution Request*: If Engineer determines that an item of material or equipment proposed by Contractor does not qualify as an "or-equal" item, Contractor may request that Engineer considered the proposed item as a substitute pursuant to Paragraph 7.05.

7.05 *Substitutes*

A. Unless the specification or description of an item of material or equipment required to be furnished under the Contract Documents contains or is followed by words reading that no substitution is permitted, Contractor may request that Engineer authorize the use of other items of material or equipment under the circumstances described below. To the extent possible such requests shall be made before commencement of related construction at the Site.

1. Contractor shall submit sufficient information as provided below to allow Engineer to determine if the item of material or equipment proposed is functionally equivalent to that named and an acceptable substitute therefor. Engineer will not accept requests for review of proposed substitute items of material or equipment from anyone other than Contractor.

2. The requirements for review by Engineer will be as set forth in Paragraph 7.05.B, as supplemented by the Specifications, and as Engineer may decide is appropriate under the circumstances.

3. Contractor shall make written application to Engineer for review of a proposed substitute item of material or equipment that Contractor seeks to furnish or use. The application:

a. shall certify that the proposed substitute item will:

1) perform adequately the functions and achieve the results called for by the general design,

2) be similar in substance to that specified, and

3) be suited to the same use as that specified.

b. will state:

1) the extent, if any, to which the use of the proposed substitute item will necessitate a change in Contract Times,

2) whether use of the proposed substitute item in the Work will require a change in any of the Contract Documents (or in the provisions of any other direct contract with Owner for other Work on the Project) to adapt the design to the proposed substitute item, and

3) whether incorporation or use of the proposed substitute item in connection with the Work is subject to payment of any license fee or royalty.

c. will identify:

1) all variations of the proposed substitute item from that specified, and

Copyright © 2013 National Society of Professional Engineers, American Council of Engineering Companies, and American Society of Civil Engineers. All rights reserved.

2) available engineering, sales, maintenance, repair, and replacement services.

d. shall contain an itemized estimate of all costs or credits that will result directly or indirectly from use of such substitute item, including but not limited to changes in Contract Price, shared savings, costs of redesign, and claims of other contractors affected by any resulting change.

B. *Engineer's Evaluation and Determination*: Engineer will be allowed a reasonable time to evaluate each substitute request, and to obtain comments and direction from Owner. Engineer may require Contractor to furnish additional data about the proposed substitute item. Engineer will be the sole judge of acceptability. No substitute will be ordered, furnished, installed, or utilized until Engineer's review is complete and Engineer determines that the proposed item is an acceptable substitute. Engineer's determination will be evidenced by a Field Order or a proposed Change Order accounting for the substitution itself and all related impacts, including changes in Contract Price or Contract Times. Engineer will advise Contractor in writing of any negative determination.

C. *Special Guarantee*: Owner may require Contractor to furnish at Contractor's expense a special performance guarantee or other surety with respect to any substitute.

D. *Reimbursement of Engineer's Cost*: Engineer will record Engineer's costs in evaluating a substitute proposed or submitted by Contractor. Whether or not Engineer approves a substitute so proposed or submitted by Contractor, Contractor shall reimburse Owner for the reasonable charges of Engineer for evaluating each such proposed substitute. Contractor shall also reimburse Owner for the reasonable charges of Engineer for making changes in the Contract Documents (or in the provisions of any other direct contract with Owner) resulting from the acceptance of each proposed substitute.

E. *Contractor's Expense*: Contractor shall provide all data in support of any proposed substitute at Contractor's expense.

F. *Effect of Engineer's Determination*: If Engineer approves the substitution request, Contractor shall execute the proposed Change Order and proceed with the substitution. The Engineer's denial of a substitution request shall be final and binding, and may not be reversed through an appeal under any provision of the Contract Documents. Contractor may challenge the scope of reimbursement costs imposed under Paragraph 7.05.D, by timely submittal of a Change Proposal.

7.06 *Concerning Subcontractors, Suppliers, and Others*

A. Contractor may retain Subcontractors and Suppliers for the performance of parts of the Work. Such Subcontractors and Suppliers must be acceptable to Owner.

B. Contractor shall retain specific Subcontractors, Suppliers, or other individuals or entities for the performance of designated parts of the Work if required by the Contract to do so.

C. Subsequent to the submittal of Contractor's Bid or final negotiation of the terms of the Contract, Owner may not require Contractor to retain any Subcontractor, Supplier, or other individual or entity to furnish or perform any of the Work against which Contractor has reasonable objection.

D. Prior to entry into any binding subcontract or purchase order, Contractor shall submit to Owner the identity of the proposed Subcontractor or Supplier (unless Owner has already deemed such proposed Subcontractor or Supplier acceptable, during the bidding process or otherwise). Such proposed Subcontractor or Supplier shall be deemed acceptable to Owner unless Owner raises a substantive, reasonable objection within five days.

Copyright © 2013 National Society of Professional Engineers, American Council of Engineering Companies, and American Society of Civil Engineers. All rights reserved.

E. Owner may require the replacement of any Subcontractor, Supplier, or other individual or entity retained by Contractor to perform any part of the Work. Owner also may require Contractor to retain specific replacements; provided, however, that Owner may not require a replacement to which Contractor has a reasonable objection. If Contractor has submitted the identity of certain Subcontractors, Suppliers, or other individuals or entities for acceptance by Owner, and Owner has accepted it (either in writing or by failing to make written objection thereto), then Owner may subsequently revoke the acceptance of any such Subcontractor, Supplier, or other individual or entity so identified solely on the basis of substantive, reasonable objection after due investigation. Contractor shall submit an acceptable replacement for the rejected Subcontractor, Supplier, or other individual or entity.

F. If Owner requires the replacement of any Subcontractor, Supplier, or other individual or entity retained by Contractor to perform any part of the Work, then Contractor shall be entitled to an adjustment in Contract Price or Contract Times, or both, with respect to the replacement; and Contractor shall initiate a Change Proposal for such adjustment within 30 days of Owner's requirement of replacement.

G. No acceptance by Owner of any such Subcontractor, Supplier, or other individual or entity, whether initially or as a replacement, shall constitute a waiver of the right of Owner to the completion of the Work in accordance with the Contract Documents.

H. On a monthly basis Contractor shall submit to Engineer a complete list of all Subcontractors and Suppliers having a direct contract with Contractor, and of all other Subcontractors and Suppliers known to Contractor at the time of submittal.

I. Contractor shall be fully responsible to Owner and Engineer for all acts and omissions of the Subcontractors, Suppliers, and other individuals or entities performing or furnishing any of the Work just as Contractor is responsible for Contractor's own acts and omissions.

J. Contractor shall be solely responsible for scheduling and coordinating the Work of Subcontractors, Suppliers, and all other individuals or entities performing or furnishing any of the Work.

K. Contractor shall restrict all Subcontractors, Suppliers, and such other individuals or entities performing or furnishing any of the Work from communicating with Engineer or Owner, except through Contractor or in case of an emergency, or as otherwise expressly allowed herein.

L. The divisions and sections of the Specifications and the identifications of any Drawings shall not control Contractor in dividing the Work among Subcontractors or Suppliers or delineating the Work to be performed by any specific trade.

M. All Work performed for Contractor by a Subcontractor or Supplier shall be pursuant to an appropriate contractual Agreement that specifically binds the Subcontractor or Supplier to the applicable terms and conditions of the Contract Documents for the benefit of Owner and Engineer.

N. Owner may furnish to any Subcontractor or Supplier, to the extent practicable, information about amounts paid to Contractor on account of Work performed for Contractor by the particular Subcontractor or Supplier.

Copyright © 2013 National Society of Professional Engineers, American Council of Engineering Companies, and American Society of Civil Engineers. All rights reserved.

O. Nothing in the Contract Documents:

1. shall create for the benefit of any such Subcontractor, Supplier, or other individual or entity any contractual relationship between Owner or Engineer and any such Subcontractor, Supplier, or other individual or entity; nor

2. shall create any obligation on the part of Owner or Engineer to pay or to see to the payment of any money due any such Subcontractor, Supplier, or other individual or entity except as may otherwise be required by Laws and Regulations.

7.07 *Patent Fees and Royalties*

A. Contractor shall pay all license fees and royalties and assume all costs incident to the use in the performance of the Work or the incorporation in the Work of any invention, design, process, product, or device which is the subject of patent rights or copyrights held by others. If a particular invention, design, process, product, or device is specified in the Contract Documents for use in the performance of the Work and if, to the actual knowledge of Owner or Engineer, its use is subject to patent rights or copyrights calling for the payment of any license fee or royalty to others, the existence of such rights shall be disclosed by Owner in the Contract Documents.

B. To the fullest extent permitted by Laws and Regulations, Owner shall indemnify and hold harmless Contractor, and its officers, directors, members, partners, employees, agents, consultants, and subcontractors from and against all claims, costs, losses, and damages (including but not limited to all fees and charges of engineers, architects, attorneys, and other professionals, and all court or arbitration or other dispute resolution costs) arising out of or relating to any infringement of patent rights or copyrights incident to the use in the performance of the Work or resulting from the incorporation in the Work of any invention, design, process, product, or device specified in the Contract Documents, but not identified as being subject to payment of any license fee or royalty to others required by patent rights or copyrights.

C. To the fullest extent permitted by Laws and Regulations, Contractor shall indemnify and hold harmless Owner and Engineer, and the officers, directors, members, partners, employees, agents, consultants and subcontractors of each and any of them from and against all claims, costs, losses, and damages (including but not limited to all fees and charges of engineers, architects, attorneys, and other professionals and all court or arbitration or other dispute resolution costs) arising out of or relating to any infringement of patent rights or copyrights incident to the use in the performance of the Work or resulting from the incorporation in the Work of any invention, design, process, product, or device not specified in the Contract Documents.

7.08 *Permits*

A. Unless otherwise provided in the Contract Documents, Contractor shall obtain and pay for all construction permits and licenses. Owner shall assist Contractor, when necessary, in obtaining such permits and licenses. Contractor shall pay all governmental charges and inspection fees necessary for the prosecution of the Work which are applicable at the time of the submission of Contractor's Bid (or when Contractor became bound under a negotiated contract). Owner shall pay all charges of utility owners for connections for providing permanent service to the Work.

Copyright © 2013 National Society of Professional Engineers, American Council of Engineering Companies, and American Society of Civil Engineers. All rights reserved.

7.09 *Taxes*

A. Contractor shall pay all sales, consumer, use, and other similar taxes required to be paid by Contractor in accordance with the Laws and Regulations of the place of the Project which are applicable during the performance of the Work.

7.10 *Laws and Regulations*

A. Contractor shall give all notices required by and shall comply with all Laws and Regulations applicable to the performance of the Work. Except where otherwise expressly required by applicable Laws and Regulations, neither Owner nor Engineer shall be responsible for monitoring Contractor's compliance with any Laws or Regulations.

B. If Contractor performs any Work or takes any other action knowing or having reason to know that it is contrary to Laws or Regulations, Contractor shall bear all resulting costs and losses, and shall indemnify and hold harmless Owner and Engineer, and the officers, directors, members, partners, employees, agents, consultants, and subcontractors of each and any of them from and against all claims, costs, losses, and damages (including but not limited to all fees and charges of engineers, architects, attorneys, and other professionals and all court or arbitration or other dispute resolution costs) arising out of or relating to such Work or other action. It shall not be Contractor's responsibility to make certain that the Work described in the Contract Documents is in accordance with Laws and Regulations, but this shall not relieve Contractor of Contractor's obligations under Paragraph 3.03.

C. Owner or Contractor may give notice to the other party of any changes after the submission of Contractor's Bid (or after the date when Contractor became bound under a negotiated contract) in Laws or Regulations having an effect on the cost or time of performance of the Work, including but not limited to changes in Laws or Regulations having an effect on procuring permits and on sales, use, value-added, consumption, and other similar taxes. If Owner and Contractor are unable to agree on entitlement to or on the amount or extent, if any, of any adjustment in Contract Price or Contract Times resulting from such changes, then within 30 days of such notice Contractor may submit a Change Proposal, or Owner may initiate a Claim.

7.11 *Record Documents*

A. Contractor shall maintain in a safe place at the Site one printed record copy of all Drawings, Specifications, Addenda, Change Orders, Work Change Directives, Field Orders, written interpretations and clarifications, and approved Shop Drawings. Contractor shall keep such record documents in good order and annotate them to show changes made during construction. These record documents, together with all approved Samples, will be available to Engineer for reference. Upon completion of the Work, Contractor shall deliver these record documents to Engineer.

7.12 *Safety and Protection*

A. Contractor shall be solely responsible for initiating, maintaining, and supervising all safety precautions and programs in connection with the Work. Such responsibility does not relieve Subcontractors of their responsibility for the safety of persons or property in the performance of their Work, nor for compliance with applicable safety Laws and Regulations. Contractor shall take all necessary precautions for the safety of, and shall provide the necessary protection to prevent damage, injury, or loss to:

1. all persons on the Site or who may be affected by the Work;

Copyright © 2013 National Society of Professional Engineers, American Council of Engineering Companies, and American Society of Civil Engineers. All rights reserved.

2. all the Work and materials and equipment to be incorporated therein, whether in storage on or off the Site; and

3. other property at the Site or adjacent thereto, including trees, shrubs, lawns, walks, pavements, roadways, structures, other work in progress, utilities, and Underground Facilities not designated for removal, relocation, or replacement in the course of construction.

B. Contractor shall comply with all applicable Laws and Regulations relating to the safety of persons or property, or to the protection of persons or property from damage, injury, or loss; and shall erect and maintain all necessary safeguards for such safety and protection. Contractor shall notify Owner; the owners of adjacent property, Underground Facilities, and other utilities; and other contractors and utility owners performing work at or adjacent to the Site, when prosecution of the Work may affect them, and shall cooperate with them in the protection, removal, relocation, and replacement of their property or work in progress.

C. Contractor shall comply with the applicable requirements of Owner's safety programs, if any. The Supplementary Conditions identify any Owner's safety programs that are applicable to the Work.

D. Contractor shall inform Owner and Engineer of the specific requirements of Contractor's safety program with which Owner's and Engineer's employees and representatives must comply while at the Site.

E. All damage, injury, or loss to any property referred to in Paragraph 7.12.A.2 or 7.12.A.3 caused, directly or indirectly, in whole or in part, by Contractor, any Subcontractor, Supplier, or any other individual or entity directly or indirectly employed by any of them to perform any of the Work, or anyone for whose acts any of them may be liable, shall be remedied by Contractor at its expense (except damage or loss attributable to the fault of Drawings or Specifications or to the acts or omissions of Owner or Engineer or anyone employed by any of them, or anyone for whose acts any of them may be liable, and not attributable, directly or indirectly, in whole or in part, to the fault or negligence of Contractor or any Subcontractor, Supplier, or other individual or entity directly or indirectly employed by any of them).

F. Contractor's duties and responsibilities for safety and protection shall continue until such time as all the Work is completed and Engineer has issued a notice to Owner and Contractor in accordance with Paragraph 15.06.B that the Work is acceptable (except as otherwise expressly provided in connection with Substantial Completion).

G. Contractor's duties and responsibilities for safety and protection shall resume whenever Contractor or any Subcontractor or Supplier returns to the Site to fulfill warranty or correction obligations, or to conduct other tasks arising from the Contract Documents.

7.13 *Safety Representative*

A. Contractor shall designate a qualified and experienced safety representative at the Site whose duties and responsibilities shall be the prevention of accidents and the maintaining and supervising of safety precautions and programs.

7.14 *Hazard Communication Programs*

A. Contractor shall be responsible for coordinating any exchange of material safety data sheets or other hazard communication information required to be made available to or

Copyright © 2013 National Society of Professional Engineers, American Council of Engineering Companies, and American Society of Civil Engineers. All rights reserved.

exchanged between or among employers at the Site in accordance with Laws or Regulations.

7.15 *Emergencies*

A. In emergencies affecting the safety or protection of persons or the Work or property at the Site or adjacent thereto, Contractor is obligated to act to prevent threatened damage, injury, or loss. Contractor shall give Engineer prompt written notice if Contractor believes that any significant changes in the Work or variations from the Contract Documents have been caused thereby or are required as a result thereof. If Engineer determines that a change in the Contract Documents is required because of the action taken by Contractor in response to such an emergency, a Work Change Directive or Change Order will be issued.

7.16 *Shop Drawings, Samples, and Other Submittals*

A. *Shop Drawing and Sample Submittal Requirements*:

1. Before submitting a Shop Drawing or Sample, Contractor shall have:

a. reviewed and coordinated the Shop Drawing or Sample with other Shop Drawings and Samples and with the requirements of the Work and the Contract Documents;

b. determined and verified all field measurements, quantities, dimensions, specified performance and design criteria, installation requirements, materials, catalog numbers, and similar information with respect thereto;

c. determined and verified the suitability of all materials and equipment offered with respect to the indicated application, fabrication, shipping, handling, storage, assembly, and installation pertaining to the performance of the Work; and

d. determined and verified all information relative to Contractor's responsibilities for means, methods, techniques, sequences, and procedures of construction, and safety precautions and programs incident thereto.

2. Each submittal shall bear a stamp or specific written certification that Contractor has satisfied Contractor's obligations under the Contract Documents with respect to Contractor's review of that submittal, and that Contractor approves the submittal.

3. With each submittal, Contractor shall give Engineer specific written notice of any variations that the Shop Drawing or Sample may have from the requirements of the Contract Documents. This notice shall be set forth in a written communication separate from the Shop Drawings or Sample submittal; and, in addition, in the case of Shop Drawings by a specific notation made on each Shop Drawing submitted to Engineer for review and approval of each such variation.

B. *Submittal Procedures for Shop Drawings and Samples*: Contractor shall submit Shop Drawings and Samples to Engineer for review and approval in accordance with the accepted Schedule of Submittals. Each submittal will be identified as Engineer may require.

1. *Shop Drawings*:

a. Contractor shall submit the number of copies required in the Specifications.

b. Data shown on the Shop Drawings will be complete with respect to quantities, dimensions, specified performance and design criteria, materials, and similar data to show Engineer the services, materials, and equipment Contractor proposes to

Copyright © 2013 National Society of Professional Engineers, American Council of Engineering Companies, and American Society of Civil Engineers. All rights reserved.

provide and to enable Engineer to review the information for the limited purposes required by Paragraph 7.16.D.

2. *Samples*:

   a. Contractor shall submit the number of Samples required in the Specifications.

   b. Contractor shall clearly identify each Sample as to material, Supplier, pertinent data such as catalog numbers, the use for which intended and other data as Engineer may require to enable Engineer to review the submittal for the limited purposes required by Paragraph 7.16.D.

3. Where a Shop Drawing or Sample is required by the Contract Documents or the Schedule of Submittals, any related Work performed prior to Engineer's review and approval of the pertinent submittal will be at the sole expense and responsibility of Contractor.

C. *Other Submittals*: Contractor shall submit other submittals to Engineer in accordance with the accepted Schedule of Submittals, and pursuant to the applicable terms of the Specifications.

D. *Engineer's Review*:

1. Engineer will provide timely review of Shop Drawings and Samples in accordance with the Schedule of Submittals acceptable to Engineer. Engineer's review and approval will be only to determine if the items covered by the submittals will, after installation or incorporation in the Work, conform to the information given in the Contract Documents and be compatible with the design concept of the completed Project as a functioning whole as indicated by the Contract Documents.

2. Engineer's review and approval will not extend to means, methods, techniques, sequences, or procedures of construction or to safety precautions or programs incident thereto.

3. Engineer's review and approval of a separate item as such will not indicate approval of the assembly in which the item functions.

4. Engineer's review and approval of a Shop Drawing or Sample shall not relieve Contractor from responsibility for any variation from the requirements of the Contract Documents unless Contractor has complied with the requirements of Paragraph 7.16.A.3 and Engineer has given written approval of each such variation by specific written notation thereof incorporated in or accompanying the Shop Drawing or Sample. Engineer will document any such approved variation from the requirements of the Contract Documents in a Field Order.

5. Engineer's review and approval of a Shop Drawing or Sample shall not relieve Contractor from responsibility for complying with the requirements of Paragraph 7.16.A and B.

6. Engineer's review and approval of a Shop Drawing or Sample, or of a variation from the requirements of the Contract Documents, shall not, under any circumstances, change the Contract Times or Contract Price, unless such changes are included in a Change Order.

7. Neither Engineer's receipt, review, acceptance or approval of a Shop Drawing, Sample, or other submittal shall result in such item becoming a Contract Document.

Copyright © 2013 National Society of Professional Engineers, American Council of Engineering Companies, and American Society of Civil Engineers. All rights reserved.

8. Contractor shall perform the Work in compliance with the requirements and commitments set forth in approved Shop Drawings and Samples, subject to the provisions of Paragraph 7.16.D.4.

E. *Resubmittal Procedures*:

1. Contractor shall make corrections required by Engineer and shall return the required number of corrected copies of Shop Drawings and submit, as required, new Samples for review and approval. Contractor shall direct specific attention in writing to revisions other than the corrections called for by Engineer on previous submittals.

2. Contractor shall furnish required submittals with sufficient information and accuracy to obtain required approval of an item with no more than three submittals. Engineer will record Engineer's time for reviewing a fourth or subsequent submittal of a Shop Drawings, Sample, or other item requiring approval, and Contractor shall be responsible for Engineer's charges to Owner for such time. Owner may impose a set-off against payments due to Contractor to secure reimbursement for such charges.

3. If Contractor requests a change of a previously approved submittal item, Contractor shall be responsible for Engineer's charges to Owner for its review time, and Owner may impose a set-off against payments due to Contractor to secure reimbursement for such charges, unless the need for such change is beyond the control of Contractor.

7.17 *Contractor's General Warranty and Guarantee*

A. Contractor warrants and guarantees to Owner that all Work will be in accordance with the Contract Documents and will not be defective. Engineer and its officers, directors, members, partners, employees, agents, consultants, and subcontractors shall be entitled to rely on Contractor's warranty and guarantee.

B. Contractor's warranty and guarantee hereunder excludes defects or damage caused by:

1. abuse, modification, or improper maintenance or operation by persons other than Contractor, Subcontractors, Suppliers, or any other individual or entity for whom Contractor is responsible; or

2. normal wear and tear under normal usage.

C. Contractor's obligation to perform and complete the Work in accordance with the Contract Documents shall be absolute. None of the following will constitute an acceptance of Work that is not in accordance with the Contract Documents or a release of Contractor's obligation to perform the Work in accordance with the Contract Documents:

1. observations by Engineer;

2. recommendation by Engineer or payment by Owner of any progress or final payment;

3. the issuance of a certificate of Substantial Completion by Engineer or any payment related thereto by Owner;

4. use or occupancy of the Work or any part thereof by Owner;

5. any review and approval of a Shop Drawing or Sample submittal;

6. the issuance of a notice of acceptability by Engineer;

7. any inspection, test, or approval by others; or

8. any correction of defective Work by Owner.

Copyright © 2013 National Society of Professional Engineers, American Council of Engineering Companies, and American Society of Civil Engineers. All rights reserved.

D. If the Contract requires the Contractor to accept the assignment of a contract entered into by Owner, then the specific warranties, guarantees, and correction obligations contained in the assigned contract shall govern with respect to Contractor's performance obligations to Owner for the Work described in the assigned contract.

7.18 *Indemnification*

A. To the fullest extent permitted by Laws and Regulations, and in addition to any other obligations of Contractor under the Contract or otherwise, Contractor shall indemnify and hold harmless Owner and Engineer, and the officers, directors, members, partners, employees, agents, consultants and subcontractors of each and any of them from and against all claims, costs, losses, and damages (including but not limited to all fees and charges of engineers, architects, attorneys, and other professionals and all court or arbitration or other dispute resolution costs) arising out of or relating to the performance of the Work, provided that any such claim, cost, loss, or damage is attributable to bodily injury, sickness, disease, or death, or to injury to or destruction of tangible property (other than the Work itself), including the loss of use resulting therefrom but only to the extent caused by any negligent act or omission of Contractor, any Subcontractor, any Supplier, or any individual or entity directly or indirectly employed by any of them to perform any of the Work or anyone for whose acts any of them may be liable.

B. In any and all claims against Owner or Engineer or any of their officers, directors, members, partners, employees, agents, consultants, or subcontractors by any employee (or the survivor or personal representative of such employee) of Contractor, any Subcontractor, any Supplier, or any individual or entity directly or indirectly employed by any of them to perform any of the Work, or anyone for whose acts any of them may be liable, the indemnification obligation under Paragraph 7.18.A shall not be limited in any way by any limitation on the amount or type of damages, compensation, or benefits payable by or for Contractor or any such Subcontractor, Supplier, or other individual or entity under workers' compensation acts, disability benefit acts, or other employee benefit acts.

C. The indemnification obligations of Contractor under Paragraph 7.18.A shall not extend to the liability of Engineer and Engineer's officers, directors, members, partners, employees, agents, consultants and subcontractors arising out of:

1. the preparation or approval of, or the failure to prepare or approve Maps, Drawings, Opinions, Reports, Surveys, Change Orders, Designs, or Specifications; or

2. giving directions or instructions, or failing to give them, if that is the primary cause of the injury or damage.

7.19 *Delegation of Professional Design Services*

A. Contractor will not be required to provide professional design services unless such services are specifically required by the Contract Documents for a portion of the Work or unless such services are required to carry out Contractor's responsibilities for construction means, methods, techniques, sequences and procedures. Contractor shall not be required to provide professional services in violation of applicable Laws and Regulations.

B. If professional design services or certifications by a design professional related to systems, materials, or equipment are specifically required of Contractor by the Contract Documents, Owner and Engineer will specify all performance and design criteria that such services must satisfy. Contractor shall cause such services or certifications to be provided by a properly licensed professional, whose signature and seal shall appear on all Drawings, Calculations, Specifications, Certifications, and other Submittals prepared by such professional. Shop

Copyright © 2013 National Society of Professional Engineers, American Council of Engineering Companies, and American Society of Civil Engineers. All rights reserved.

Drawings and other submittals related to the Work designed or certified by such professional, if prepared by others, shall bear such professional's written approval when submitted to Engineer.

C. Owner and Engineer shall be entitled to rely upon the adequacy, accuracy, and completeness of the services, certifications, or approvals performed by such design professionals, provided Owner and Engineer have specified to Contractor all performance and design criteria that such services must satisfy.

D. Pursuant to this paragraph, Engineer's review and approval of design calculations and design drawings will be only for the limited purpose of checking for conformance with performance and design criteria given and the design concept expressed in the Contract Documents. Engineer's review and approval of Shop Drawings and other submittals (except design calculations and design drawings) will be only for the purpose stated in Paragraph 7.16.D.1.

E. Contractor shall not be responsible for the adequacy of the performance or design criteria specified by Owner or Engineer.

ARTICLE 8 – OTHER WORK AT THE SITE

8.01 *Other Work*

A. In addition to and apart from the Work under the Contract Documents, the Owner may perform other work at or adjacent to the Site. Such other work may be performed by Owner's employees, or through contracts between the Owner and third parties. Owner may also arrange to have third-party utility owners perform work on their utilities and facilities at or adjacent to the Site.

B. If Owner performs other work at or adjacent to the Site with Owner's employees, or through contracts for such other work, then Owner shall give Contractor written notice thereof prior to starting any such other work. If Owner has advance information regarding the start of any utility work at or adjacent to the Site, Owner shall provide such information to Contractor.

C. Contractor shall afford each other contractor that performs such other work, each utility owner performing other work, and Owner, if Owner is performing other work with Owner's employees, proper and safe access to the Site, and provide a reasonable opportunity for the introduction and storage of materials and equipment and the execution of such other work. Contractor shall do all cutting, fitting, and patching of the Work that may be required to properly connect or otherwise make its several parts come together and properly integrate with such other work. Contractor shall not endanger any work of others by cutting, excavating, or otherwise altering such work; provided, however, that Contractor may cut or alter others' work with the written consent of Engineer and the others whose work will be affected.

D. If the proper execution or results of any part of Contractor's Work depends upon work performed by others under this Article 8, Contractor shall inspect such other work and promptly report to Engineer in writing any delays, defects, or deficiencies in such other work that render it unavailable or unsuitable for the proper execution and results of Contractor's Work. Contractor's failure to so report will constitute an acceptance of such other work as fit and proper for integration with Contractor's Work except for latent defects and deficiencies in such other work.

Copyright © 2013 National Society of Professional Engineers, American Council of Engineering Companies, and American Society of Civil Engineers. All rights reserved.

8.02 *Coordination*

A. If Owner intends to contract with others for the performance of other work at or adjacent to the Site, to perform other work at or adjacent to the Site with Owner's employees, or to arrange to have utility owners perform work at or adjacent to the Site, the following will be set forth in the Supplementary Conditions or provided to Contractor prior to the start of any such other work:

1. the identity of the individual or entity that will have authority and responsibility for coordination of the activities among the various contractors;

2. an itemization of the specific matters to be covered by such authority and responsibility; and

3. the extent of such authority and responsibilities.

B. Unless otherwise provided in the Supplementary Conditions, Owner shall have sole authority and responsibility for such coordination.

8.03 *Legal Relationships*

A. If, in the course of performing other work at or adjacent to the Site for Owner, the Owner's employees, any other contractor working for Owner, or any utility owner causes damage to the Work or to the property of Contractor or its Subcontractors, or delays, disrupts, interferes with, or increases the scope or cost of the performance of the Work, through actions or inaction, then Contractor shall be entitled to an equitable adjustment in the Contract Price or the Contract Times, or both. Contractor must submit any Change Proposal seeking an equitable adjustment in the Contract Price or the Contract Times under this paragraph within 30 days of the damaging, delaying, disrupting, or interfering event. The entitlement to, and extent of, any such equitable adjustment shall take into account information (if any) regarding such other work that was provided to Contractor in the Contract Documents prior to the submittal of the Bid or the final negotiation of the terms of the Contract. When applicable, any such equitable adjustment in Contract Price shall be conditioned on Contractor assigning to Owner all Contractor's rights against such other contractor or utility owner with respect to the damage, delay, disruption, or interference that is the subject of the adjustment. Contractor's entitlement to an adjustment of the Contract Times is conditioned on such adjustment being essential to Contractor's ability to complete the Work within the Contract Times.

B. Contractor shall take reasonable and customary measures to avoid damaging, delaying, disrupting, or interfering with the Work of Owner, any other contractor, or any utility owner performing other work at or adjacent to the Site. If Contractor fails to take such measures and as a result damages, delays, disrupts, or interferes with the Work of any such other contractor or utility owner, then Owner may impose a set-off against payments due to Contractor, and assign to such other contractor or utility owner the Owner's contractual rights against Contractor with respect to the breach of the obligations set forth in this paragraph.

C. When Owner is performing other work at or adjacent to the Site with Owner's employees, Contractor shall be liable to Owner for damage to such other work, and for the reasonable direct delay, disruption, and interference costs incurred by Owner as a result of Contractor's failure to take reasonable and customary measures with respect to Owner's other work. In response to such damage, delay, disruption, or interference, Owner may impose a set-off against payments due to Contractor.

Copyright © 2013 National Society of Professional Engineers, American Council of Engineering Companies, and American Society of Civil Engineers. All rights reserved.

D. If Contractor damages, delays, disrupts, or interferes with the Work of any other contractor, or any utility owner performing other work at or adjacent to the Site, through Contractor's failure to take reasonable and customary measures to avoid such impacts, or if any claim arising out of Contractor's actions, inactions, or negligence in performance of the Work at or adjacent to the Site is made by any such other contractor or utility owner against Contractor, Owner, or Engineer, then Contractor shall (1) promptly attempt to settle the claim as to all parties through negotiations with such other contractor or utility owner, or otherwise resolve the claim by arbitration or other dispute resolution proceeding or at law, and (2) indemnify and hold harmless Owner and Engineer, and the officers, directors, members, partners, employees, agents, consultants and subcontractors of each and any of them from and against any such claims, and against all costs, losses, and damages (including but not limited to all fees and charges of engineers, architects, attorneys, and other professionals and all court or arbitration or other dispute resolution costs) arising out of or relating to such damage, delay, disruption, or interference.

ARTICLE 9 – OWNER'S RESPONSIBILITIES

9.01 *Communications to Contractor*

A. Except as otherwise provided in these General Conditions, Owner shall issue all communications to Contractor through Engineer.

9.02 *Replacement of Engineer*

A. Owner may at its discretion appoint an engineer to replace Engineer, provided Contractor makes no reasonable objection to the replacement engineer. The replacement engineer's status under the Contract Documents shall be that of the former Engineer.

9.03 *Furnish Data*

A. Owner shall promptly furnish the data required of Owner under the Contract Documents.

9.04 *Pay When Due*

A. Owner shall make payments to Contractor when they are due as provided in the Agreement.

9.05 *Lands and Easements; Reports, Tests, and Drawings*

A. Owner's duties with respect to providing lands and easements are set forth in Paragraph 5.01.

B. Owner's duties with respect to providing engineering surveys to establish reference points are set forth in Paragraph 4.03.

C. Article 5 refers to Owner's identifying and making available to Contractor copies of reports of explorations and tests of conditions at the Site, and drawings of physical conditions relating to existing surface or subsurface structures at the Site.

9.06 *Insurance*

A. Owner's responsibilities, if any, with respect to purchasing and maintaining liability and property insurance are set forth in Article 6.

9.07 *Change Orders*

A. Owner's responsibilities with respect to Change Orders are set forth in Article 11.

Copyright © 2013 National Society of Professional Engineers, American Council of Engineering Companies, and American Society of Civil Engineers. All rights reserved.

9.08 *Inspections, Tests, and Approvals*

A. Owner's responsibility with respect to certain inspections, tests, and approvals is set forth in Paragraph 14.02.B.

9.09 *Limitations on Owner's Responsibilities*

A. The Owner shall not supervise, direct, or have control or authority over, nor be responsible for, Contractor's means, methods, techniques, sequences, or procedures of construction, or the safety precautions and programs incident thereto, or for any failure of Contractor to comply with Laws and Regulations applicable to the performance of the Work. Owner will not be responsible for Contractor's failure to perform the Work in accordance with the Contract Documents.

9.10 *Undisclosed Hazardous Environmental Condition*

A. Owner's responsibility in respect to an undisclosed Hazardous Environmental Condition is set forth in Paragraph 5.06.

9.11 *Evidence of Financial Arrangements*

A. Upon request of Contractor, Owner shall furnish Contractor reasonable evidence that financial arrangements have been made to satisfy Owner's obligations under the Contract Documents (including obligations under proposed changes in the Work).

9.12 *Safety Programs*

A. While at the Site, Owner's employees and representatives shall comply with the specific applicable requirements of Contractor's safety programs of which Owner has been informed.

B. Owner shall furnish copies of any applicable Owner safety programs to Contractor.

ARTICLE 10 – ENGINEER'S STATUS DURING CONSTRUCTION

10.01 *Owner's Representative*

A. Engineer will be Owner's representative during the construction period. The duties and responsibilities and the limitations of authority of Engineer as Owner's representative during construction are set forth in the Contract.

10.02 *Visits to Site*

A. Engineer will make visits to the Site at intervals appropriate to the various stages of construction as Engineer deems necessary in order to observe as an experienced and qualified design professional the progress that has been made and the quality of the various aspects of Contractor's executed Work. Based on information obtained during such visits and observations, Engineer, for the benefit of Owner, will determine, in general, if the Work is proceeding in accordance with the Contract Documents. Engineer will not be required to make exhaustive or continuous inspections on the Site to check the quality or quantity of the Work. Engineer's efforts will be directed toward providing for Owner a greater degree of confidence that the completed Work will conform generally to the Contract Documents. On the basis of such visits and observations, Engineer will keep Owner informed of the progress of the Work and will endeavor to guard Owner against defective Work.

B. Engineer's visits and observations are subject to all the limitations on Engineer's authority and responsibility set forth in Paragraph 10.08. Particularly, but without limitation, during

Copyright © 2013 National Society of Professional Engineers, American Council of Engineering Companies, and American Society of Civil Engineers. All rights reserved.

or as a result of Engineer's visits or observations of Contractor's Work, Engineer will not supervise, direct, control, or have authority over or be responsible for Contractor's means, methods, techniques, sequences, or procedures of construction, or the safety precautions and programs incident thereto, or for any failure of Contractor to comply with Laws and Regulations applicable to the performance of the Work.

10.03 *Project Representative*

A. If Owner and Engineer have agreed that Engineer will furnish a Resident Project Representative to represent Engineer at the Site and assist Engineer in observing the progress and quality of the Work, then the authority and responsibilities of any such Resident Project Representative will be as provided in the Supplementary Conditions, and limitations on the responsibilities thereof will be as provided in Paragraph 10.08. If Owner designates another representative or agent to represent Owner at the Site who is not Engineer's consultant, agent, or employee, the responsibilities and authority and limitations thereon of such other individual or entity will be as provided in the Supplementary Conditions.

10.04 *Rejecting Defective Work*

A. Engineer has the authority to reject Work in accordance with Article 14.

10.05 *Shop Drawings, Change Orders and Payments*

A. Engineer's authority, and limitations thereof, as to Shop Drawings and Samples, are set forth in Paragraph 7.16.

B. Engineer's authority, and limitations thereof, as to design calculations and design drawings submitted in response to a delegation of professional design services, if any, are set forth in Paragraph 7.19.

C. Engineer's authority as to Change Orders is set forth in Article 11.

D. Engineer's authority as to Applications for Payment is set forth in Article 15.

10.06 *Determinations for Unit Price Work*

A. Engineer will determine the actual quantities and classifications of Unit Price Work performed by Contractor as set forth in Paragraph 13.03.

10.07 *Decisions on Requirements of Contract Documents and Acceptability of Work*

A. Engineer will render decisions regarding the requirements of the Contract Documents, and judge the acceptability of the Work, pursuant to the specific procedures set forth herein for initial interpretations, Change Proposals, and acceptance of the Work. In rendering such decisions and judgments, Engineer will not show partiality to Owner or Contractor, and will not be liable to Owner, Contractor, or others in connection with any proceedings, interpretations, decisions, or judgments conducted or rendered in good faith.

10.08 *Limitations on Engineer's Authority and Responsibilities*

A. Neither Engineer's authority or responsibility under this Article 10 or under any other provision of the Contract, nor any decision made by Engineer in good faith either to exercise or not exercise such authority or responsibility or the undertaking, exercise, or performance of any authority or responsibility by Engineer, shall create, impose, or give rise to any duty in contract, tort, or otherwise owed by Engineer to Contractor, any Subcontractor, any Supplier, any other individual or entity, or to any surety for or employee or agent of any of them.

Copyright © 2013 National Society of Professional Engineers, American Council of Engineering Companies, and American Society of Civil Engineers. All rights reserved.

B. Engineer will not supervise, direct, control, or have authority over or be responsible for Contractor's means, methods, techniques, sequences, or procedures of construction, or the safety precautions and programs incident thereto, or for any failure of Contractor to comply with Laws and Regulations applicable to the performance of the Work. Engineer will not be responsible for Contractor's failure to perform the Work in accordance with the Contract Documents.

C. Engineer will not be responsible for the acts or omissions of Contractor or of any Subcontractor, any Supplier, or of any other individual or entity performing any of the Work.

D. Engineer's review of the final Application for Payment and accompanying documentation and all maintenance and operating instructions, schedules, guarantees, bonds, certificates of inspection, tests and approvals, and other documentation required to be delivered by Paragraph 15.06.A will only be to determine generally that their content complies with the requirements of, and in the case of certificates of inspections, tests, and approvals, that the results certified indicate compliance with the Contract Documents.

E. The limitations upon authority and responsibility set forth in this Paragraph 10.08 shall also apply to the Resident Project Representative, if any.

10.09 *Compliance with Safety Program*

A. While at the Site, Engineer's employees and representatives will comply with the specific applicable requirements of Owner's and Contractor's safety programs (if any) of which Engineer has been informed.

ARTICLE 11 – AMENDING THE CONTRACT DOCUMENTS; CHANGES IN THE WORK

11.01 *Amending and Supplementing Contract Documents*

A. The Contract Documents may be amended or supplemented by a Change Order, a Work Change Directive, or a Field Order.

1. *Change Orders*:

a. If an amendment or supplement to the Contract Documents includes a change in the Contract Price or the Contract Times, such amendment or supplement must be set forth in a Change Order. A Change Order also may be used to establish amendments and supplements of the Contract Documents that do not affect the Contract Price or Contract Times.

b. Owner and Contractor may amend those terms and conditions of the Contract Documents that do not involve (1) the performance or acceptability of the Work, (2) the design (as set forth in the Drawings, Specifications, or otherwise), or (3) other engineering or technical matters, without the recommendation of the Engineer. Such an amendment shall be set forth in a Change Order.

2. *Work Change Directives*: A Work Change Directive will not change the Contract Price or the Contract Times but is evidence that the parties expect that the modification ordered or documented by a Work Change Directive will be incorporated in a subsequently issued Change Order, following negotiations by the parties as to the Work Change Directive's effect, if any, on the Contract Price and Contract Times; or, if negotiations are unsuccessful, by a determination under the terms of the Contract Documents governing adjustments, expressly including Paragraph 11.04 regarding change of Contract Price. Contractor must submit any Change Proposal seeking an

Copyright © 2013 National Society of Professional Engineers, American Council of Engineering Companies, and American Society of Civil Engineers. All rights reserved.

adjustment of the Contract Price or the Contract Times, or both, no later than 30 days after the completion of the Work set out in the Work Change Directive. Owner must submit any Claim seeking an adjustment of the Contract Price or the Contract Times, or both, no later than 60 days after issuance of the Work Change Directive.

3. *Field Orders*: Engineer may authorize minor changes in the Work if the changes do not involve an adjustment in the Contract Price or the Contract Times and are compatible with the design concept of the completed Project as a functioning whole as indicated by the Contract Documents. Such changes will be accomplished by a Field Order and will be binding on Owner and also on Contractor, which shall perform the Work involved promptly. If Contractor believes that a Field Order justifies an adjustment in the Contract Price or Contract Times, or both, then before proceeding with the Work at issue, Contractor shall submit a Change Proposal as provided herein.

11.02 *Owner-Authorized Changes in the Work*

A. Without invalidating the Contract and without notice to any surety, Owner may, at any time or from time to time, order additions, deletions, or revisions in the Work. Such changes shall be supported by Engineer's recommendation, to the extent the change involves the design (as set forth in the Drawings, Specifications, or otherwise), or other engineering or technical matters. Such changes may be accomplished by a Change Order, if Owner and Contractor have agreed as to the effect, if any, of the changes on Contract Times or Contract Price; or by a Work Change Directive. Upon receipt of any such document, Contractor shall promptly proceed with the Work involved; or, in the case of a deletion in the Work, promptly cease construction activities with respect to such deleted Work. Added or revised Work shall be performed under the applicable conditions of the Contract Documents. Nothing in this paragraph shall obligate Contractor to undertake work that Contractor reasonably concludes cannot be performed in a manner consistent with Contractor's safety obligations under the Contract Documents or Laws and Regulations.

11.03 *Unauthorized Changes in the Work*

A. Contractor shall not be entitled to an increase in the Contract Price or an extension of the Contract Times with respect to any work performed that is not required by the Contract Documents, as amended, modified, or supplemented, except in the case of an emergency as provided in Paragraph 7.15 or in the case of uncovering Work as provided in Paragraph 14.05.

11.04 *Change of Contract Price*

A. The Contract Price may only be changed by a Change Order. Any Change Proposal for an adjustment in the Contract Price shall comply with the provisions of Paragraph 11.06. Any Claim for an adjustment of Contract Price shall comply with the provisions of Article 12.

B. An adjustment in the Contract Price will be determined as follows:

1. where the Work involved is covered by unit prices contained in the Contract Documents, then by application of such unit prices to the quantities of the items involved (subject to the provisions of Paragraph 13.03); or

2. where the Work involved is not covered by unit prices contained in the Contract Documents, then by a mutually agreed lump sum (which may include an allowance for overhead and profit not necessarily in accordance with Paragraph 11.04.C.2); or

3. where the Work involved is not covered by unit prices contained in the Contract Documents and the parties do not reach mutual agreement to a lump sum, then on

Copyright © 2013 National Society of Professional Engineers, American Council of Engineering Companies, and American Society of Civil Engineers. All rights reserved.

the basis of the Cost of the Work (determined as provided in Paragraph 13.01) plus a Contractor's fee for overhead and profit (determined as provided in Paragraph 11.04.C).

C. *Contractor's Fee*: When applicable, the Contractor's fee for overhead and profit shall be determined as follows:

1. a mutually acceptable fixed fee; or

2. if a fixed fee is not agreed upon, then a fee based on the following percentages of the various portions of the Cost of the Work:

a. for costs incurred under Paragraphs 13.01.B.1 and 13.01.B.2, the Contractor's fee shall be 15 percent;

b. for costs incurred under Paragraph 13.01.B.3, the Contractor's fee shall be five percent;

c. where one or more tiers of subcontracts are on the basis of Cost of the Work plus a fee and no fixed fee is agreed upon, the intent of Paragraphs 11.01.C.2.a and 11.01.C.2.b is that the Contractor's fee shall be based on: (1) a fee of 15 percent of the costs incurred under Paragraphs 13.01.A.1 and 13.01.A.2 by the Subcontractor that actually performs the Work, at whatever tier, and (2) with respect to Contractor itself and to any Subcontractors of a tier higher than that of the Subcontractor that actually performs the Work, a fee of five percent of the amount (fee plus underlying costs incurred) attributable to the next lower tier Subcontractor; provided, however, that for any such subcontracted work the maximum total fee to be paid by Owner shall be no greater than 27 percent of the costs incurred by the Subcontractor that actually performs the Work;

d. no fee shall be payable on the basis of costs itemized under Paragraphs 13.01.B.4, 13.01.B.5, and 13.01.C;

e. the amount of credit to be allowed by Contractor to Owner for any change which results in a net decrease in cost will be the amount of the actual net decrease in cost plus a deduction in Contractor's fee by an amount equal to five percent of such net decrease; and

f. when both additions and credits are involved in any one change, the adjustment in Contractor's fee shall be computed on the basis of the net change in accordance with Paragraphs 11.04.C.2.a through 11.04.C.2.e, inclusive.

11.05 *Change of Contract Times*

A. The Contract Times may only be changed by a Change Order. Any Change Proposal for an adjustment in the Contract Times shall comply with the provisions of Paragraph 11.06. Any Claim for an adjustment in the Contract Times shall comply with the provisions of Article 12.

B. An adjustment of the Contract Times shall be subject to the limitations set forth in Paragraph 4.05, concerning delays in Contractor's progress.

11.06 *Change Proposals*

A. Contractor shall submit a Change Proposal to Engineer to request an adjustment in the Contract Times or Contract Price; appeal an initial decision by Engineer concerning the requirements of the Contract Documents or relating to the acceptability of the Work under the Contract Documents; contest a set-off against payment due; or seek other relief under

Copyright © 2013 National Society of Professional Engineers, American Council of Engineering Companies, and American Society of Civil Engineers. All rights reserved.

the Contract. The Change Proposal shall specify any proposed change in Contract Times or Contract Price, or both, or other proposed relief, and explain the reason for the proposed change, with citations to any governing or applicable provisions of the Contract Documents.

1. *Procedures*: Contractor shall submit each Change Proposal to Engineer promptly (but in no event later than 30 days) after the start of the event giving rise thereto, or after such initial decision. The Contractor shall submit supporting data, including the proposed change in Contract Price or Contract Time (if any), to the Engineer and Owner within 15 days after the submittal of the Change Proposal. The supporting data shall be accompanied by a written statement that the supporting data are accurate and complete, and that any requested time or price adjustment is the entire adjustment to which Contractor believes it is entitled as a result of said event. Engineer will advise Owner regarding the Change Proposal, and consider any comments or response from Owner regarding the Change Proposal.

2. *Engineer's Action*: Engineer will review each Change Proposal and, within 30 days after receipt of the Contractor's supporting data, either deny the Change Proposal in whole, approve it in whole, or deny it in part and approve it in part. Such actions shall be in writing, with a copy provided to Owner and Contractor. If Engineer does not take action on the Change Proposal within 30 days, then either Owner or Contractor may at any time thereafter submit a letter to the other party indicating that as a result of Engineer's inaction the Change Proposal is deemed denied, thereby commencing the time for appeal of the denial under Article 12.

3. *Binding Decision*: Engineer's decision will be final and binding upon Owner and Contractor, unless Owner or Contractor appeals the decision by filing a Claim under Article 12.

B. *Resolution of Certain Change Proposals*: If the Change Proposal does not involve the design (as set forth in the Drawings, Specifications, or otherwise), the acceptability of the Work, or other engineering or technical matters, then Engineer will notify the parties that the Engineer is unable to resolve the Change Proposal. For purposes of further resolution of such a Change Proposal, such notice shall be deemed a denial, and Contractor may choose to seek resolution under the terms of Article 12.

11.07 *Execution of Change Orders*

A. Owner and Contractor shall execute appropriate Change Orders covering:

1. changes in the Contract Price or Contract Times which are agreed to by the parties, including any undisputed sum or amount of time for Work actually performed in accordance with a Work Change Directive;

2. changes in Contract Price resulting from an Owner set-off, unless Contractor has duly contested such set-off;

3. changes in the Work which are: (a) ordered by Owner pursuant to Paragraph 11.02, (b) required because of Owner's acceptance of defective Work under Paragraph 14.04 or Owner's correction of defective Work under Paragraph 14.07, or (c) agreed to by the parties, subject to the need for Engineer's recommendation if the change in the Work involves the design (as set forth in the Drawings, Specifications, or otherwise), or other engineering or technical matters; and

4. changes in the Contract Price or Contract Times, or other changes, which embody the substance of any final and binding results under Paragraph 11.06, or Article 12.

Copyright © 2013 National Society of Professional Engineers, American Council of Engineering Companies, and American Society of Civil Engineers. All rights reserved.

B. If Owner or Contractor refuses to execute a Change Order that is required to be executed under the terms of this Paragraph 11.07, it shall be deemed to be of full force and effect, as if fully executed.

11.08 *Notification to Surety*

A. If the provisions of any bond require notice to be given to a surety of any change affecting the general scope of the Work or the provisions of the Contract Documents (including, but not limited to, Contract Price or Contract Times), the giving of any such notice will be Contractor's responsibility. The amount of each applicable bond will be adjusted to reflect the effect of any such change.

ARTICLE 12 – CLAIMS

12.01 *Claims*

A. *Claims Process*: The following disputes between Owner and Contractor shall be submitted to the Claims process set forth in this Article:

1. Appeals by Owner or Contractor of Engineer's decisions regarding Change Proposals;

2. Owner demands for adjustments in the Contract Price or Contract Times, or other relief under the Contract Documents; and

3. Disputes that Engineer has been unable to address because they do not involve the design (as set forth in the Drawings, Specifications, or otherwise), the acceptability of the Work, or other engineering or technical matters.

B. *Submittal of Claim*: The party submitting a Claim shall deliver it directly to the other party to the Contract promptly (but in no event later than 30 days) after the start of the event giving rise thereto; in the case of appeals regarding Change Proposals within 30 days of the decision under appeal. The party submitting the Claim shall also furnish a copy to the Engineer, for its information only. The responsibility to substantiate a Claim shall rest with the party making the Claim. In the case of a Claim by Contractor seeking an increase in the Contract Times or Contract Price, or both, Contractor shall certify that the Claim is made in good faith, that the supporting data are accurate and complete, and that to the best of Contractor's knowledge and belief the amount of time or money requested accurately reflects the full amount to which Contractor is entitled.

C. *Review and Resolution*: The party receiving a Claim shall review it thoroughly, giving full consideration to its merits. The two parties shall seek to resolve the Claim through the exchange of information and direct negotiations. The parties may extend the time for resolving the Claim by mutual agreement. All actions taken on a Claim shall be stated in writing and submitted to the other party, with a copy to Engineer.

D. *Mediation*:

1. At any time after initiation of a Claim, Owner and Contractor may mutually agree to mediation of the underlying dispute. The Agreement to mediate shall stay the Claim submittal and response process.

2. If Owner and Contractor agree to mediation, then after 60 days from such Agreement, either Owner or Contractor may unilaterally terminate the mediation process, and the Claim submittal and decision process shall resume as of the date of the termination. If the mediation proceeds but is unsuccessful in resolving the dispute, the Claim

Copyright © 2013 National Society of Professional Engineers, American Council of Engineering Companies, and American Society of Civil Engineers. All rights reserved.

submittal and decision process shall resume as of the date of the conclusion of the mediation, as determined by the mediator.

3. Owner and Contractor shall each pay one-half of the mediator's fees and costs.

E. *Partial Approval*: If the party receiving a Claim approves the Claim in part and denies it in part, such action shall be final and binding unless within 30 days of such action the other party invokes the procedure set forth in Article 17 for final resolution of disputes.

F. *Denial of Claim*: If efforts to resolve a Claim are not successful, the party receiving the Claim may deny it by giving written notice of denial to the other party. If the receiving party does not take action on the Claim within 90 days, then either Owner or Contractor may at any time thereafter submit a letter to the other party indicating that as a result of the inaction, the Claim is deemed denied, thereby commencing the time for appeal of the denial. A denial of the Claim shall be final and binding unless within 30 days of the denial the other party invokes the procedure set forth in Article 17 for the final resolution of disputes.

G. *Final and Binding Results*: If the parties reach a mutual agreement regarding a Claim, whether through approval of the Claim, direct negotiations, mediation, or otherwise; or if a Claim is approved in part and denied in part, or denied in full, and such actions become final and binding; then the results of the Agreement or action on the Claim shall be incorporated in a Change Order to the extent they affect the Contract, including the Work, the Contract Times, or the Contract Price.

ARTICLE 13 – COST OF THE WORK; ALLOWANCES; UNIT PRICE WORK

13.01 *Cost of the Work*

A. *Purposes for Determination of Cost of the Work*: The term Cost of the Work means the sum of all costs necessary for the proper performance of the Work at issue, as further defined below. The provisions of this Paragraph 13.01 are used for two distinct purposes:

1. To determine Cost of the Work when Cost of the Work is a component of the Contract Price, under cost-plus-fee, time-and-materials, or other cost-based terms; or

2. To determine the value of a Change Order, Change Proposal, Claim, set-off, or other adjustment in Contract Price. When the value of any such adjustment is determined on the basis of Cost of the Work, Contractor is entitled only to those additional or incremental costs required because of the change in the Work or because of the event giving rise to the adjustment.

B. *Costs Included*: Except as otherwise may be agreed to in writing by Owner, costs included in the Cost of the Work shall be in amounts no higher than those prevailing in the locality of the Project, shall not include any of the costs itemized in Paragraph 13.01.C, and shall include only the following items:

1. Payroll costs for employees in the direct employ of Contractor in the performance of the Work under schedules of job classifications agreed upon by Owner and Contractor. Such employees shall include, without limitation, superintendents, foremen, and other personnel employed full time on the Work. Payroll costs for employees not employed full time on the Work shall be apportioned on the basis of their time spent on the Work. Payroll costs shall include, but not be limited to, salaries and wages plus the cost of fringe benefits, which shall include social security contributions, unemployment, excise, and payroll taxes, workers' compensation, health and retirement benefits, bonuses, sick leave, and vacation and holiday pay applicable

Copyright © 2013 National Society of Professional Engineers, American Council of Engineering Companies, and American Society of Civil Engineers. All rights reserved.

thereto. The expenses of performing Work outside of regular working hours, on Saturday, Sunday, or legal holidays, shall be included in the above to the extent authorized by Owner.

2. Cost of all materials and equipment furnished and incorporated in the Work, including costs of transportation and storage thereof, and Suppliers' field services required in connection therewith. All cash discounts shall accrue to Contractor unless Owner deposits funds with Contractor with which to make payments, in which case the cash discounts shall accrue to Owner. All trade discounts, rebates, and refunds and returns from sale of surplus materials and equipment shall accrue to Owner, and Contractor shall make provisions so that they may be obtained.

3. Payments made by Contractor to Subcontractors for Work performed by Subcontractors. If required by Owner, Contractor shall obtain competitive bids from subcontractors acceptable to Owner and Contractor and shall deliver such bids to Owner, who will then determine, with the advice of Engineer, which bids, if any, will be acceptable. If any subcontract provides that the Subcontractor is to be paid on the basis of Cost of the Work plus a fee, the Subcontractor's Cost of the Work and fee shall be determined in the same manner as Contractor's Cost of the Work and fee as provided in this Paragraph 13.01.

4. Costs of special consultants (including but not limited to engineers, architects, testing laboratories, surveyors, attorneys, and accountants) employed for services specifically related to the Work.

5. Supplemental costs including the following:

    a. The proportion of necessary transportation, travel, and subsistence expenses of Contractor's employees incurred in discharge of duties connected with the Work.

    b. Cost, including transportation and maintenance, of all materials, supplies, equipment, machinery, appliances, office, and temporary facilities at the Site, and hand tools not owned by the workers, which are consumed in the performance of the Work, and cost, less market value, of such items used but not consumed which remain the property of Contractor.

    c. Rentals of all construction equipment and machinery, and the parts thereof, whether rented from Contractor or others in accordance with rental agreements approved by Owner with the advice of Engineer, and the costs of transportation, loading, unloading, assembly, dismantling, and removal thereof. All such costs shall be in accordance with the terms of said rental agreements. The rental of any such equipment, machinery, or parts shall cease when the use thereof is no longer necessary for the Work.

    d. Sales, consumer, use, and other similar taxes related to the Work, and for which Contractor is liable, as imposed by Laws and Regulations.

    e. Deposits lost for causes other than negligence of Contractor, any Subcontractor, or anyone directly or indirectly employed by any of them or for whose acts any of them may be liable, and royalty payments and fees for permits and licenses.

    f. Losses and damages (and related expenses) caused by damage to the Work, not compensated by insurance or otherwise, sustained by Contractor in connection with the performance of the Work (except losses and damages within the deductible amounts of property insurance established in accordance with Paragraph 6.05), provided such losses and damages have resulted from causes

Copyright © 2013 National Society of Professional Engineers, American Council of Engineering Companies, and American Society of Civil Engineers. All rights reserved.

other than the negligence of Contractor, any Subcontractor, or anyone directly or indirectly employed by any of them or for whose acts any of them may be liable. Such losses shall include settlements made with the written consent and approval of Owner. No such losses, damages, and expenses shall be included in the Cost of the Work for the purpose of determining Contractor's fee.

g. The cost of utilities, fuel, and sanitary facilities at the Site.

h. Minor expenses such as communication service at the Site, express and courier services, and similar petty cash items in connection with the Work.

i. The costs of premiums for all bonds and insurance that Contractor is required by the Contract Documents to purchase and maintain.

C. *Costs Excluded*: The term Cost of the Work shall not include any of the following items:

1. Payroll costs and other compensation of Contractor's officers, executives, principals (of partnerships and sole proprietorships), general managers, safety managers, engineers, architects, estimators, attorneys, auditors, accountants, purchasing and contracting agents, expediters, timekeepers, clerks, and other personnel employed by Contractor, whether at the Site or in Contractor's principal or branch office for general administration of the Work and not specifically included in the agreed upon schedule of job classifications referred to in Paragraph 13.01.B.1 or specifically covered by Paragraph 13.01.B.4. The payroll costs and other compensation excluded here are to be considered administrative costs covered by the Contractor's fee.

2. Expenses of Contractor's principal and branch offices other than Contractor's office at the Site.

3. Any part of Contractor's capital expenses, including interest on Contractor's capital employed for the Work and charges against Contractor for delinquent payments.

4. Costs due to the negligence of Contractor, any Subcontractor, or anyone directly or indirectly employed by any of them or for whose acts any of them may be liable, including but not limited to, the correction of defective Work, disposal of materials or equipment wrongly supplied, and making good any damage to property.

5. Other overhead or general expense costs of any kind and the costs of any item not specifically and expressly included in Paragraph 13.01.B.

D. *Contractor's Fee*: When the Work as a whole is performed on the basis of cost-plus, Contractor's fee shall be determined as set forth in the Agreement. When the value of any Work covered by a Change Order, Change Proposal, Claim, set-off, or other adjustment in Contract Price is determined on the basis of Cost of the Work, Contractor's fee shall be determined as set forth in Paragraph 11.04.C.

E. *Documentation*: Whenever the Cost of the Work for any purpose is to be determined pursuant to this Article 13, Contractor will establish and maintain records thereof in accordance with generally accepted accounting practices and submit in a form acceptable to Engineer an itemized cost breakdown together with supporting data.

13.02 *Allowances*

A. It is understood that Contractor has included in the Contract Price all allowances so named in the Contract Documents and shall cause the Work so covered to be performed for such sums and by such persons or entities as may be acceptable to Owner and Engineer.

Copyright © 2013 National Society of Professional Engineers, American Council of Engineering Companies, and American Society of Civil Engineers. All rights reserved.

B. *Cash Allowances*: Contractor agrees that:

1. the cash allowances include the cost to Contractor (less any applicable trade discounts) of materials and equipment required by the allowances to be delivered at the Site, and all applicable taxes; and

2. Contractor's costs for unloading and handling on the Site, labor, installation, overhead, profit, and other expenses contemplated for the cash allowances have been included in the Contract Price and not in the allowances, and no demand for additional payment on account of any of the foregoing will be valid.

C. *Contingency Allowance*: Contractor agrees that a contingency allowance, if any, is for the sole use of Owner to cover unanticipated costs.

D. Prior to final payment, an appropriate Change Order will be issued as recommended by Engineer to reflect actual amounts due Contractor on account of Work covered by allowances, and the Contract Price shall be correspondingly adjusted.

13.03 *Unit Price Work*

A. Where the Contract Documents provide that all or part of the Work is to be Unit Price Work, initially the Contract Price will be deemed to include for all Unit Price Work an amount equal to the sum of the unit price for each separately identified item of Unit Price Work times the estimated quantity of each item as indicated in the Agreement.

B. The estimated quantities of items of Unit Price Work are not guaranteed and are solely for the purpose of comparison of Bids and determining an initial Contract Price. Payments to Contractor for Unit Price Work will be based on actual quantities.

C. Each unit price will be deemed to include an amount considered by Contractor to be adequate to cover Contractor's overhead and profit for each separately identified item.

D. Engineer will determine the actual quantities and classifications of Unit Price Work performed by Contractor. Engineer will review with Contractor the Engineer's preliminary determinations on such matters before rendering a written decision thereon (by recommendation of an Application for Payment or otherwise). Engineer's written decision thereon will be final and binding (except as modified by Engineer to reflect changed factual conditions or more accurate data) upon Owner and Contractor, subject to the provisions of the following paragraph.

E. Within 30 days of Engineer's written decision under the preceding paragraph, Contractor may submit a Change Proposal, or Owner may file a Claim, seeking an adjustment in the Contract Price if:

1. the quantity of any item of Unit Price Work performed by Contractor differs materially and significantly from the estimated quantity of such item indicated in the Agreement;

2. there is no corresponding adjustment with respect to any other item of Work; and

3. Contractor believes that it is entitled to an increase in Contract Price as a result of having incurred additional expense or Owner believes that Owner is entitled to a decrease in Contract Price, and the parties are unable to agree as to the amount of any such increase or decrease.

Copyright © 2013 National Society of Professional Engineers, American Council of Engineering Companies, and American Society of Civil Engineers. All rights reserved.

ARTICLE 14 – TESTS AND INSPECTIONS; CORRECTION, REMOVAL OR ACCEPTANCE OF DEFECTIVE WORK

14.01 *Access to Work*

A. Owner, Engineer, their consultants and other representatives and personnel of Owner, independent testing laboratories, and authorities having jurisdiction will have access to the Site and the Work at reasonable times for their observation, inspection, and testing. Contractor shall provide them proper and safe conditions for such access and advise them of Contractor's safety procedures and programs so that they may comply therewith as applicable.

14.02 *Tests, Inspections, and Approvals*

A. Contractor shall give Engineer timely notice of readiness of the Work (or specific parts thereof) for all required inspections and tests, and shall cooperate with inspection and testing personnel to facilitate required inspections and tests.

B. Owner shall retain and pay for the services of an independent inspector, testing laboratory, or other qualified individual or entity to perform all inspections and tests expressly required by the Contract Documents to be furnished and paid for by Owner, except that costs incurred in connection with tests or inspections of covered Work shall be governed by the provisions of Paragraph 14.05.

C. If Laws or Regulations of any public body having jurisdiction require any Work (or part thereof) specifically to be inspected, tested, or approved by an employee or other representative of such public body, Contractor shall assume full responsibility for arranging and obtaining such inspections, tests, or approvals, pay all costs in connection therewith, and furnish Engineer the required certificates of inspection or approval.

D. Contractor shall be responsible for arranging, obtaining, and paying for all inspections and tests required:

1. by the Contract Documents, unless the Contract Documents expressly allocate responsibility for a specific inspection or test to Owner;

2. to attain Owner's and Engineer's acceptance of materials or equipment to be incorporated in the Work;

3. by manufacturers of equipment furnished under the Contract Documents;

4. for testing, adjusting, and balancing of mechanical, electrical, and other equipment to be incorporated into the Work; and

5. for acceptance of materials, mix designs, or equipment submitted for approval prior to Contractor's purchase thereof for incorporation in the Work.

Such inspections and tests shall be performed by independent inspectors, testing laboratories, or other qualified individuals or entities acceptable to Owner and Engineer.

E. If the Contract Documents require the Work (or part thereof) to be approved by Owner, Engineer, or another designated individual or entity, then Contractor shall assume full responsibility for arranging and obtaining such approvals.

F. If any Work (or the Work of others) that is to be inspected, tested, or approved is covered by Contractor without written concurrence of Engineer, Contractor shall, if requested by Engineer, uncover such Work for observation. Such uncovering shall be at Contractor's expense unless Contractor had given Engineer timely notice of Contractor's intention to

Copyright © 2013 National Society of Professional Engineers, American Council of Engineering Companies, and American Society of Civil Engineers. All rights reserved.

cover the same and Engineer had not acted with reasonable promptness in response to such notice.

14.03 *Defective Work*

A. *Contractor's Obligation*: It is Contractor's obligation to assure that the Work is not defective.

B. *Engineer's Authority*: Engineer has the authority to determine whether Work is defective, and to reject defective Work.

C. *Notice of Defects*: Prompt notice of all defective Work of which Owner or Engineer has actual knowledge will be given to Contractor.

D. *Correction, or Removal and Replacement*: Promptly after receipt of written notice of defective Work, Contractor shall correct all such defective Work, whether or not fabricated, installed, or completed, or, if Engineer has rejected the defective Work, remove it from the Project and replace it with Work that is not defective.

E. *Preservation of Warranties*: When correcting defective Work, Contractor shall take no action that would void or otherwise impair Owner's special warranty and guarantee, if any, on said Work.

F. *Costs and Damages*: In addition to its correction, removal, and replacement obligations with respect to defective Work, Contractor shall pay all claims, costs, losses, and damages arising out of or relating to defective Work, including but not limited to the cost of the inspection, testing, correction, removal, replacement, or reconstruction of such defective Work, fines levied against Owner by governmental authorities because the Work is defective, and the costs of repair or replacement of work of others resulting from defective Work. Prior to final payment, if Owner and Contractor are unable to agree as to the measure of such claims, costs, losses, and damages resulting from defective Work, then Owner may impose a reasonable set-off against payments due under Article 15.

14.04 *Acceptance of Defective Work*

A. If, instead of requiring correction or removal and replacement of defective Work, Owner prefers to accept it, Owner may do so (subject, if such acceptance occurs prior to final payment, to Engineer's confirmation that such acceptance is in general accord with the design intent and applicable engineering principles, and will not endanger public safety). Contractor shall pay all claims, costs, losses, and damages attributable to Owner's evaluation of and determination to accept such defective Work (such costs to be approved by Engineer as to reasonableness), and for the diminished value of the Work to the extent not otherwise paid by Contractor. If any such acceptance occurs prior to final payment, the necessary revisions in the Contract Documents with respect to the Work shall be incorporated in a Change Order. If the parties are unable to agree as to the decrease in the Contract Price, reflecting the diminished value of Work so accepted, then Owner may impose a reasonable set-off against payments due under Article 15. If the acceptance of defective Work occurs after final payment, Contractor shall pay an appropriate amount to Owner.

14.05 *Uncovering Work*

A. Engineer has the authority to require special inspection or testing of the Work, whether or not the Work is fabricated, installed, or completed.

Copyright © 2013 National Society of Professional Engineers, American Council of Engineering Companies, and American Society of Civil Engineers. All rights reserved.

B. If any Work is covered contrary to the written request of Engineer, then Contractor shall, if requested by Engineer, uncover such Work for Engineer's observation, and then replace the covering, all at Contractor's expense.

C. If Engineer considers it necessary or advisable that covered Work be observed by Engineer or inspected or tested by others, then Contractor, at Engineer's request, shall uncover, expose, or otherwise make available for observation, inspection, or testing as Engineer may require, that portion of the Work in question, and provide all necessary labor, material, and equipment.

1. If it is found that the uncovered Work is defective, Contractor shall be responsible for all claims, costs, losses, and damages arising out of or relating to such uncovering, exposure, observation, inspection, and testing, and of satisfactory replacement or reconstruction (including but not limited to all costs of repair or replacement of work of others); and pending Contractor's full discharge of this responsibility the Owner shall be entitled to impose a reasonable set-off against payments due under Article 15.

2. If the uncovered Work is not found to be defective, Contractor shall be allowed an increase in the Contract Price or an extension of the Contract Times, or both, directly attributable to such uncovering, exposure, observation, inspection, testing, replacement, and reconstruction. If the parties are unable to agree as to the amount or extent thereof, then Contractor may submit a Change Proposal within 30 days of the determination that the Work is not defective.

14.06 *Owner May Stop the Work*

A. If the Work is defective, or Contractor fails to supply sufficient skilled workers or suitable materials or equipment, or fails to perform the Work in such a way that the completed Work will conform to the Contract Documents, then Owner may order Contractor to stop the Work, or any portion thereof, until the cause for such order has been eliminated; however, this right of Owner to stop the Work shall not give rise to any duty on the part of Owner to exercise this right for the benefit of Contractor, any Subcontractor, any Supplier, any other individual or entity, or any surety for, or employee or agent of any of them.

14.07 *Owner May Correct Defective Work*

A. If Contractor fails within a reasonable time after written notice from Engineer to correct defective Work, or to remove and replace rejected Work as required by Engineer, or if Contractor fails to perform the Work in accordance with the Contract Documents, or if Contractor fails to comply with any other provision of the Contract Documents, then Owner may, after seven days written notice to Contractor, correct or remedy any such deficiency.

B. In exercising the rights and remedies under this Paragraph 14.07, Owner shall proceed expeditiously. In connection with such corrective or remedial action, Owner may exclude Contractor from all or part of the Site, take possession of all or part of the Work and suspend Contractor's services related thereto, and incorporate in the Work all materials and equipment stored at the Site or for which Owner has paid Contractor but which are stored elsewhere. Contractor shall allow Owner, Owner's representatives, agents and employees, Owner's other contractors, and Engineer and Engineer's consultants access to the Site to enable Owner to exercise the rights and remedies under this paragraph.

C. All claims, costs, losses, and damages incurred or sustained by Owner in exercising the rights and remedies under this Paragraph 14.07 will be charged against Contractor as set-offs against payments due under Article 15. Such claims, costs, losses and damages will

Copyright © 2013 National Society of Professional Engineers, American Council of Engineering Companies, and American Society of Civil Engineers. All rights reserved.

include but not be limited to all costs of repair, or replacement of work of others destroyed or damaged by correction, removal, or replacement of Contractor's defective Work.

D. Contractor shall not be allowed an extension of the Contract Times because of any delay in the performance of the Work attributable to the exercise by Owner of Owner's rights and remedies under this Paragraph 14.07.

ARTICLE 15 – PAYMENTS TO CONTRACTOR; SET-OFFS; COMPLETION; CORRECTION PERIOD

15.01 *Progress Payments*

A. *Basis for Progress Payments*: The Schedule of Values established as provided in Article 2 will serve as the basis for progress payments and will be incorporated into a form of Application for Payment acceptable to Engineer. Progress payments on account of Unit Price Work will be based on the number of units completed during the pay period, as determined under the provisions of Paragraph 13.03. Progress payments for cost-based Work will be based on Cost of the Work completed by Contractor during the pay period.

B. *Applications for Payments*:

1. At least 20 days before the date established in the Agreement for each progress payment (but not more often than once a month), Contractor shall submit to Engineer for review an Application for Payment filled out and signed by Contractor covering the Work completed as of the date of the application and accompanied by such supporting documentation as is required by the Contract Documents. If payment is requested on the basis of materials and equipment not incorporated in the Work but delivered and suitably stored at the Site or at another location agreed to in writing, the Application for Payment shall also be accompanied by a bill of sale, invoice, or other documentation warranting that Owner has received the materials and equipment free and clear of all Liens, and evidence that the materials and equipment are covered by appropriate property insurance, a warehouse bond, or other arrangements to protect Owner's interest therein, all of which must be satisfactory to Owner.

2. Beginning with the second Application for Payment, each application shall include an affidavit of Contractor stating that all previous progress payments received on account of the Work have been applied on account to discharge Contractor's legitimate obligations associated with prior Applications for Payment.

3. The amount of retainage with respect to progress payments will be as stipulated in the Agreement.

C. *Review of Applications*:

1. Engineer will, within 10 days after receipt of each Application for Payment, including each resubmittal, either indicate in writing a recommendation of payment and present the application to Owner, or return the application to Contractor indicating in writing Engineer's reasons for refusing to recommend payment. In the latter case, Contractor may make the necessary corrections and resubmit the application.

2. Engineer's recommendation of any payment requested in an Application for Payment will constitute a representation by Engineer to Owner, based on Engineer's observations of the executed Work as an experienced and qualified design professional, and on Engineer's review of the Application for Payment and the accompanying data and schedules, that to the best of Engineer's knowledge, information and belief:

Copyright © 2013 National Society of Professional Engineers, American Council of Engineering Companies, and American Society of Civil Engineers. All rights reserved.

a. the Work has progressed to the point indicated;

b. the quality of the Work is generally in accordance with the Contract Documents (subject to an evaluation of the Work as a functioning whole prior to or upon Substantial Completion, the results of any subsequent tests called for in the Contract Documents, a final determination of quantities and classifications for Unit Price Work under Paragraph 13.03, and any other qualifications stated in the recommendation); and

c. the conditions precedent to Contractor's being entitled to such payment appear to have been fulfilled in so far as it is Engineer's responsibility to observe the Work.

3. By recommending any such payment Engineer will not thereby be deemed to have represented that:

a. inspections made to check the quality or the quantity of the Work as it has been performed have been exhaustive, extended to every aspect of the Work in progress, or involved detailed inspections of the Work beyond the responsibilities specifically assigned to Engineer in the Contract; or

b. there may not be other matters or issues between the parties that might entitle Contractor to be paid additionally by Owner or entitle Owner to withhold payment to Contractor.

4. Neither Engineer's review of Contractor's Work for the purposes of recommending payments nor Engineer's recommendation of any payment, including final payment, will impose responsibility on Engineer:

a. to supervise, direct, or control the Work, or

b. for the means, methods, techniques, sequences, or procedures of construction, or the safety precautions and programs incident thereto, or

c. for Contractor's failure to comply with Laws and Regulations applicable to Contractor's performance of the Work, or

d. to make any examination to ascertain how or for what purposes Contractor has used the money paid on account of the Contract Price, or

e. to determine that title to any of the Work, materials, or equipment has passed to Owner free and clear of any Liens.

5. Engineer may refuse to recommend the whole or any part of any payment if, in Engineer's opinion, it would be incorrect to make the representations to Owner stated in Paragraph 15.01.C.2.

6. Engineer will recommend reductions in payment (set-offs) necessary in Engineer's opinion to protect Owner from loss because:

a. the Work is defective, requiring correction or replacement;

b. the Contract Price has been reduced by Change Orders;

c. Owner has been required to correct defective Work in accordance with Paragraph 14.07, or has accepted defective Work pursuant to Paragraph 14.04;

d. Owner has been required to remove or remediate a Hazardous Environmental Condition for which Contractor is responsible; or

Copyright © 2013 National Society of Professional Engineers, American Council of Engineering Companies, and American Society of Civil Engineers. All rights reserved.

e. Engineer has actual knowledge of the occurrence of any of the events that would constitute a default by Contractor and therefore justify termination for cause under the Contract Documents.

D. *Payment Becomes Due*:

1. Ten days after presentation of the Application for Payment to Owner with Engineer's recommendation, the amount recommended (subject to any Owner set-offs) will become due, and when due will be paid by Owner to Contractor.

E. *Reductions in Payment by Owner*:

1. In addition to any reductions in payment (set-offs) recommended by Engineer, Owner is entitled to impose a set-off against payment based on any of the following:

a. claims have been made against Owner on account of Contractor's conduct in the performance or furnishing of the Work, or Owner has incurred costs, losses, or damages on account of Contractor's conduct in the performance or furnishing of the Work, including but not limited to claims, costs, losses, or damages from workplace injuries, adjacent property damage, non-compliance with Laws and Regulations, and patent infringement;

b. Contractor has failed to take reasonable and customary measures to avoid damage, delay, disruption, and interference with other work at or adjacent to the Site;

c. Contractor has failed to provide and maintain required bonds or insurance;

d. Owner has been required to remove or remediate a Hazardous Environmental Condition for which Contractor is responsible;

e. Owner has incurred extra charges or engineering costs related to submittal reviews, evaluations of proposed substitutes, tests and inspections, or return visits to manufacturing or assembly facilities;

f. the Work is defective, requiring correction or replacement;

g. Owner has been required to correct defective Work in accordance with Paragraph 14.07, or has accepted defective Work pursuant to Paragraph 14.04;

h. the Contract Price has been reduced by Change Orders;

i. an event that would constitute a default by Contractor and therefore justify a termination for cause has occurred;

j. liquidated damages have accrued as a result of Contractor's failure to achieve Milestones, Substantial Completion, or final completion of the Work;

k. Liens have been filed in connection with the Work, except where Contractor has delivered a specific bond satisfactory to Owner to secure the satisfaction and discharge of such Liens;

l. there are other items entitling Owner to a set off against the amount recommended.

2. If Owner imposes any set-off against payment, whether based on its own knowledge or on the written recommendations of Engineer, Owner will give Contractor immediate written notice (with a copy to Engineer) stating the reasons for such action and the specific amount of the reduction, and promptly pay Contractor any amount

Copyright © 2013 National Society of Professional Engineers, American Council of Engineering Companies, and American Society of Civil Engineers. All rights reserved.

remaining after deduction of the amount so withheld. Owner shall promptly pay Contractor the amount so withheld, or any adjustment thereto agreed to by Owner and Contractor, if Contractor remedies the reasons for such action. The reduction imposed shall be binding on Contractor unless it duly submits a Change Proposal contesting the reduction.

3. Upon a subsequent determination that Owner's refusal of payment was not justified, the amount wrongfully withheld shall be treated as an amount due as determined by Paragraph 15.01.C.1 and subject to interest as provided in the Agreement.

15.02 *Contractor's Warranty of Title*

A. Contractor warrants and guarantees that title to all Work, materials, and equipment furnished under the Contract will pass to Owner free and clear of (1) all Liens and other title defects, and (2) all patent, licensing, copyright, or royalty obligations, no later than seven days after the time of payment by Owner.

15.03 *Substantial Completion*

A. When Contractor considers the entire Work ready for its intended use Contractor shall notify Owner and Engineer in writing that the entire Work is substantially complete and request that Engineer issue a certificate of Substantial Completion. Contractor shall at the same time submit to Owner and Engineer an initial draft of punch list items to be completed or corrected before final payment.

B. Promptly after Contractor's notification, Owner, Contractor, and Engineer shall make an inspection of the Work to determine the status of completion. If Engineer does not consider the Work substantially complete, Engineer will notify Contractor in writing giving the reasons therefor.

C. If Engineer considers the Work substantially complete, Engineer will deliver to Owner a preliminary certificate of Substantial Completion which shall fix the date of Substantial Completion. Engineer shall attach to the certificate a punch list of items to be completed or corrected before final payment. Owner shall have seven days after receipt of the preliminary certificate during which to make written objection to Engineer as to any provisions of the certificate or attached punch list. If, after considering the objections to the provisions of the preliminary certificate, Engineer concludes that the Work is not substantially complete, Engineer will, within 14 days after submission of the preliminary certificate to Owner, notify Contractor in writing that the Work is not substantially complete, stating the reasons therefor. If Owner does not object to the provisions of the certificate, or if despite consideration of Owner's objections Engineer concludes that the Work is substantially complete, then Engineer will, within said 14 days, execute and deliver to Owner and Contractor a final certificate of Substantial Completion (with a revised punch list of items to be completed or corrected) reflecting such changes from the preliminary certificate as Engineer believes justified after consideration of any objections from Owner.

D. At the time of receipt of the preliminary certificate of Substantial Completion, Owner and Contractor will confer regarding Owner's use or occupancy of the Work following Substantial Completion, review the builder's risk insurance policy with respect to the end of the builder's risk coverage, and confirm the transition to coverage of the Work under a permanent property insurance policy held by Owner. Unless Owner and Contractor agree otherwise in writing, Owner shall bear responsibility for security, operation, protection of the Work, property insurance, maintenance, heat, and utilities upon Owner's use or occupancy of the Work.

Copyright © 2013 National Society of Professional Engineers, American Council of Engineering Companies, and American Society of Civil Engineers. All rights reserved.

E. After Substantial Completion the Contractor shall promptly begin Work on the punch list of items to be completed or corrected prior to final payment. In appropriate cases Contractor may submit monthly Applications for Payment for completed punch list items, following the progress payment procedures set forth above.

F. Owner shall have the right to exclude Contractor from the Site after the date of Substantial Completion subject to allowing Contractor reasonable access to remove its property and complete or correct items on the punch list.

15.04 *Partial Use or Occupancy*

A. Prior to Substantial Completion of all the Work, Owner may use or occupy any substantially completed part of the Work which has specifically been identified in the Contract Documents, or which Owner, Engineer, and Contractor agree constitutes a separately functioning and usable part of the Work that can be used by Owner for its intended purpose without significant interference with Contractor's performance of the remainder of the Work, subject to the following conditions:

1. At any time Owner may request in writing that Contractor permit Owner to use or occupy any such part of the Work that Owner believes to be substantially complete. If and when Contractor agrees that such part of the Work is substantially complete, Contractor, Owner, and Engineer will follow the procedures of Paragraph 15.03.A through E for that part of the Work.

2. At any time Contractor may notify Owner and Engineer in writing that Contractor considers any such part of the Work substantially complete and request Engineer to issue a certificate of Substantial Completion for that part of the Work.

3. Within a reasonable time after either such request, Owner, Contractor, and Engineer shall make an inspection of that part of the Work to determine its status of completion. If Engineer does not consider that part of the Work to be substantially complete, Engineer will notify Owner and Contractor in writing giving the reasons therefor. If Engineer considers that part of the Work to be substantially complete, the provisions of Paragraph 15.03 will apply with respect to certification of Substantial Completion of that part of the Work and the division of responsibility in respect thereof and access thereto.

4. No use or occupancy or separate operation of part of the Work may occur prior to compliance with the requirements of Paragraph 6.05 regarding builder's risk or other property insurance.

15.05 *Final Inspection*

A. Upon written notice from Contractor that the entire Work or an agreed portion thereof is complete, Engineer will promptly make a final inspection with Owner and Contractor and will notify Contractor in writing of all particulars in which this inspection reveals that the Work, or agreed portion thereof, is incomplete or defective. Contractor shall immediately take such measures as are necessary to complete such Work or remedy such deficiencies.

15.06 *Final Payment*

A. *Application for Payment*:

1. After Contractor has, in the opinion of Engineer, satisfactorily completed all corrections identified during the final inspection and has delivered, in accordance with the Contract Documents, all maintenance and operating instructions, schedules, guarantees, bonds, certificates or other evidence of insurance, certificates of

Copyright © 2013 National Society of Professional Engineers, American Council of Engineering Companies, and American Society of Civil Engineers. All rights reserved.

inspection, annotated record documents (as provided in Paragraph 7.11), and other documents, Contractor may make Application for Final Payment.

2. The final Application for Payment shall be accompanied (except as previously delivered) by:

   a. all documentation called for in the Contract Documents;

   b. consent of the surety, if any, to final payment;

   c. satisfactory evidence that all title issues have been resolved such that title to all Work, materials, and equipment has passed to Owner free and clear of any Liens or other title defects, or will so pass upon final payment.

   d. a list of all disputes that Contractor believes are unsettled; and

   e. complete and legally effective releases or waivers (satisfactory to Owner) of all Lien rights arising out of the Work, and of Liens filed in connection with the Work.

3. In lieu of the releases or waivers of Liens specified in Paragraph 15.06.A.2 and as approved by Owner, Contractor may furnish receipts or releases in full and an affidavit of Contractor that: (a) the releases and receipts include all labor, services, material, and equipment for which a Lien could be filed; and (b) all payrolls, material and equipment bills, and other indebtedness connected with the Work for which Owner might in any way be responsible, or which might in any way result in liens or other burdens on Owner's property, have been paid or otherwise satisfied. If any Subcontractor or Supplier fails to furnish such a release or receipt in full, Contractor may furnish a bond or other collateral satisfactory to Owner to indemnify Owner against any Lien, or Owner at its option may issue joint checks payable to Contractor and specified Subcontractors and Suppliers.

B. *Engineer's Review of Application and Acceptance*:

1. If, on the basis of Engineer's observation of the Work during construction and final inspection, and Engineer's review of the final Application for Payment and accompanying documentation as required by the Contract Documents, Engineer is satisfied that the Work has been completed and Contractor's other obligations under the Contract have been fulfilled, Engineer will, within ten days after receipt of the final Application for Payment, indicate in writing Engineer's recommendation of final payment and present the Application for Payment to Owner for payment. Such recommendation shall account for any set-offs against payment that are necessary in Engineer's opinion to protect Owner from loss for the reasons stated above with respect to progress payments. At the same time Engineer will also give written notice to Owner and Contractor that the Work is acceptable, subject to the provisions of Paragraph 15.07. Otherwise, Engineer will return the Application for Payment to Contractor, indicating in writing the reasons for refusing to recommend final payment, in which case Contractor shall make the necessary corrections and resubmit the Application for Payment.

C. *Completion of Work*: The Work is complete (subject to surviving obligations) when it is ready for final payment as established by the Engineer's written recommendation of final payment.

D. *Payment Becomes Due*: Thirty days after the presentation to Owner of the final Application for Payment and accompanying documentation, the amount recommended by Engineer (less any further sum Owner is entitled to set off against Engineer's recommendation,

Copyright © 2013 National Society of Professional Engineers, American Council of Engineering Companies, and American Society of Civil Engineers. All rights reserved.

including but not limited to set-offs for liquidated damages and set-offs allowed under the provisions above with respect to progress payments) will become due and shall be paid by Owner to Contractor.

15.07 *Waiver of Claims*

A. The making of final payment will not constitute a waiver by Owner of claims or rights against Contractor. Owner expressly reserves claims and rights arising from unsettled Liens, from defective Work appearing after final inspection pursuant to Paragraph 15.05, from Contractor's failure to comply with the Contract Documents or the terms of any special guarantees specified therein, from outstanding Claims by Owner, or from Contractor's continuing obligations under the Contract Documents.

B. The acceptance of final payment by Contractor will constitute a waiver by Contractor of all claims and rights against Owner other than those pending matters that have been duly submitted or appealed under the provisions of Article 17.

15.08 *Correction Period*

A. If within one year after the date of Substantial Completion (or such longer period of time as may be prescribed by the terms of any applicable special guarantee required by the Contract Documents, or by any specific provision of the Contract Documents), any Work is found to be defective, or if the repair of any damages to the Site, adjacent areas that Contractor has arranged to use through construction easements or otherwise, and other adjacent areas used by Contractor as permitted by Laws and Regulations, is found to be defective, then Contractor shall promptly, without cost to Owner and in accordance with Owner's written instructions:

1. correct the defective repairs to the Site or such other adjacent areas;

2. correct such defective Work;

3. if the defective Work has been rejected by Owner, remove it from the Project and replace it with Work that is not defective, and

4. satisfactorily correct or repair or remove and replace any damage to other Work, to the Work of others, or to other land or areas resulting therefrom.

B. If Contractor does not promptly comply with the terms of Owner's written instructions, or in an emergency where delay would cause serious risk of loss or damage, Owner may have the defective Work corrected or repaired or may have the rejected Work removed and replaced. Contractor shall pay all claims, costs, losses, and damages (including but not limited to all fees and charges of engineers, architects, attorneys, and other professionals and all court or arbitration or other dispute resolution costs) arising out of or relating to such correction or repair or such removal and replacement (including but not limited to all costs of repair or replacement of work of others).

C. In special circumstances where a particular item of equipment is placed in continuous service before Substantial Completion of all the Work, the correction period for that item may start to run from an earlier date if so provided in the Specifications.

D. Where defective Work (and damage to other Work resulting therefrom) has been corrected or removed and replaced under this paragraph, the correction period hereunder with respect to such Work will be extended for an additional period of one year after such correction or removal and replacement has been satisfactorily completed.

Copyright © 2013 National Society of Professional Engineers, American Council of Engineering Companies, and American Society of Civil Engineers. All rights reserved.

E. Contractor's obligations under this paragraph are in addition to all other obligations and warranties. The provisions of this paragraph shall not be construed as a substitute for, or a waiver of, the provisions of any applicable statute of limitation or repose.

ARTICLE 16 – SUSPENSION OF WORK AND TERMINATION

16.01 *Owner May Suspend Work*

A. At any time and without cause, Owner may suspend the Work or any portion thereof for a period of not more than 90 consecutive days by written notice to Contractor and Engineer. Such notice will fix the date on which Work will be resumed. Contractor shall resume the Work on the date so fixed. Contractor shall be entitled to an adjustment in the Contract Price or an extension of the Contract Times, or both, directly attributable to any such suspension. Any Change Proposal seeking such adjustments shall be submitted no later than 30 days after the date fixed for resumption of Work.

16.02 *Owner May Terminate for Cause*

A. The occurrence of any one or more of the following events will constitute a default by Contractor and justify termination for cause:

1. Contractor's persistent failure to perform the Work in accordance with the Contract Documents (including, but not limited to, failure to supply sufficient skilled workers or suitable materials or equipment or failure to adhere to the Progress Schedule);

2. Failure of Contractor to perform or otherwise to comply with a material term of the Contract Documents;

3. Contractor's disregard of Laws or Regulations of any public body having jurisdiction; or

4. Contractor's repeated disregard of the authority of Owner or Engineer.

B. If one or more of the events identified in Paragraph 16.02.A occurs, then after giving Contractor (and any surety) ten days written notice that Owner is considering a declaration that Contractor is in default and termination of the Contract, Owner may proceed to:

1. declare Contractor to be in default, and give Contractor (and any surety) notice that the Contract is terminated; and

2. enforce the rights available to Owner under any applicable performance bond.

C. Subject to the terms and operation of any applicable performance bond, if Owner has terminated the Contract for cause, Owner may exclude Contractor from the Site, take possession of the Work, incorporate in the Work all materials and equipment stored at the Site or for which Owner has paid Contractor but which are stored elsewhere, and complete the Work as Owner may deem expedient.

D. Owner may not proceed with termination of the Contract under Paragraph 16.02.B if Contractor within seven days of receipt of notice of intent to terminate begins to correct its failure to perform and proceeds diligently to cure such failure.

E. If Owner proceeds as provided in Paragraph 16.02.B, Contractor shall not be entitled to receive any further payment until the Work is completed. If the unpaid balance of the Contract Price exceeds the cost to complete the Work, including all related claims, costs, losses, and damages (including but not limited to all fees and charges of engineers, architects, attorneys, and other professionals) sustained by Owner, such excess will be paid to Contractor. If the cost to complete the Work including such related claims, costs, losses,

Copyright © 2013 National Society of Professional Engineers, American Council of Engineering Companies, and American Society of Civil Engineers. All rights reserved.

and damages exceeds such unpaid balance, Contractor shall pay the difference to Owner. Such claims, costs, losses, and damages incurred by Owner will be reviewed by Engineer as to their reasonableness and, when so approved by Engineer, incorporated in a Change Order. When exercising any rights or remedies under this paragraph, Owner shall not be required to obtain the lowest price for the Work performed.

F. Where Contractor's services have been so terminated by Owner, the termination will not affect any rights or remedies of Owner against Contractor then existing or which may thereafter accrue, or any rights or remedies of Owner against Contractor or any surety under any payment bond or performance bond. Any retention or payment of money due Contractor by Owner will not release Contractor from liability.

G. If and to the extent that Contractor has provided a performance bond under the provisions of Paragraph 6.01.A, the provisions of that bond shall govern over any inconsistent provisions of Paragraphs 16.02.B and 16.02.D.

16.03 *Owner May Terminate For Convenience*

A. Upon seven days written notice to Contractor and Engineer, Owner may, without cause and without prejudice to any other right or remedy of Owner, terminate the Contract. In such case, Contractor shall be paid for (without duplication of any items):

1. completed and acceptable Work executed in accordance with the Contract Documents prior to the effective date of termination, including fair and reasonable sums for overhead and profit on such Work;

2. expenses sustained prior to the effective date of termination in performing services and furnishing labor, materials, or equipment as required by the Contract Documents in connection with uncompleted Work, plus fair and reasonable sums for overhead and profit on such expenses; and

3. other reasonable expenses directly attributable to termination, including costs incurred to prepare a termination for convenience cost proposal.

B. Contractor shall not be paid on account of loss of anticipated overhead, profits, or revenue, or other economic loss arising out of or resulting from such termination.

16.04 *Contractor May Stop Work or Terminate*

A. If, through no act or fault of Contractor, (1) the Work is suspended for more than 90 consecutive days by Owner or under an order of court or other public authority, or (2) Engineer fails to act on any Application for Payment within 30 days after it is submitted, or (3) Owner fails for 30 days to pay Contractor any sum finally determined to be due, then Contractor may, upon seven days written notice to Owner and Engineer, and provided Owner or Engineer do not remedy such suspension or failure within that time, terminate the Contract and recover from Owner payment on the same terms as provided in Paragraph 16.03.

B. In lieu of terminating the Contract and without prejudice to any other right or remedy, if Engineer has failed to act on an Application for Payment within 30 days after it is submitted, or Owner has failed for 30 days to pay Contractor any sum finally determined to be due, Contractor may, seven days after written notice to Owner and Engineer, stop the Work until payment is made of all such amounts due Contractor, including interest thereon. The provisions of this paragraph are not intended to preclude Contractor from submitting a Change Proposal for an adjustment in Contract Price or Contract Times or otherwise for

Copyright © 2013 National Society of Professional Engineers, American Council of Engineering Companies, and American Society of Civil Engineers. All rights reserved.

expenses or damage directly attributable to Contractor's stopping the Work as permitted by this paragraph.

ARTICLE 17 – FINAL RESOLUTION OF DISPUTES

17.01 *Methods and Procedures*

A. *Disputes Subject to Final Resolution*: The following disputed matters are subject to final resolution under the provisions of this Article:

1. A timely appeal of an approval in part and denial in part of a Claim, or of a denial in full; and

2. Disputes between Owner and Contractor concerning the Work or obligations under the Contract Documents, and arising after final payment has been made.

B. *Final Resolution of Disputes*: For any dispute subject to resolution under this Article, Owner or Contractor may:

1. elect in writing to invoke the dispute resolution process provided for in the Supplementary Conditions; or

2. agree with the other party to submit the dispute to another dispute resolution process; or

3. if no dispute resolution process is provided for in the Supplementary Conditions or mutually agreed to, give written notice to the other party of the intent to submit the dispute to a court of competent jurisdiction.

ARTICLE 18 – MISCELLANEOUS

18.01 *Giving Notice*

A. Whenever any provision of the Contract Documents requires the giving of written notice, it will be deemed to have been validly given if:

1. delivered in person, by a commercial courier service or otherwise, to the individual or to a member of the firm or to an officer of the corporation for which it is intended; or

2. delivered at or sent by registered or certified mail, postage prepaid, to the last business address known to the sender of the notice.

18.02 *Computation of Times*

A. When any period of time is referred to in the Contract by days, it will be computed to exclude the first and include the last day of such period. If the last day of any such period falls on a Saturday or Sunday or on a day made a legal holiday by the law of the applicable jurisdiction, such day will be omitted from the computation.

18.03 *Cumulative Remedies*

A. The duties and obligations imposed by these General Conditions and the rights and remedies available hereunder to the parties hereto are in addition to, and are not to be construed in any way as a limitation of, any rights and remedies available to any or all of them which are otherwise imposed or available by Laws or Regulations, by special warranty or guarantee, or by other provisions of the Contract. The provisions of this paragraph will be as effective as if repeated specifically in the Contract Documents in connection with each particular duty, obligation, right, and remedy to which they apply.

Copyright © 2013 National Society of Professional Engineers, American Council of Engineering Companies, and American Society of Civil Engineers. All rights reserved.

18.04 *Limitation of Damages*

A. With respect to any and all Change Proposals, Claims, disputes subject to final resolution, and other matters at issue, neither Owner nor Engineer, nor any of their officers, directors, members, partners, employees, agents, consultants, or subcontractors, shall be liable to Contractor for any claims, costs, losses, or damages sustained by Contractor on or in connection with any other project or anticipated project.

18.05 *No Waiver*

A. A party's non-enforcement of any provision shall not constitute a waiver of that provision, nor shall it affect the enforceability of that provision or of the remainder of this Contract.

18.06 *Survival of Obligations*

A. All representations, indemnifications, warranties, and guarantees made in, required by, or given in accordance with the Contract, as well as all continuing obligations indicated in the Contract, will survive final payment, completion, and acceptance of the Work or termination or completion of the Contract or termination of the services of Contractor.

18.07 *Controlling Law*

A. This Contract is to be governed by the law of the state in which the Project is located.

18.08 *Headings*

A. Article and paragraph headings are inserted for convenience only and do not constitute parts of these General Conditions.

Copyright © 2013 National Society of Professional Engineers, American Council of Engineering Companies, and American Society of Civil Engineers. All rights reserved.

DOCUMENT 00800 - SUPPLEMENTARY CONDITIONS

**This Document is a Modified version of the EJCDC® C-800, Guide to the Preparation of Supplementary Conditions.
Copyright © 2013 National Society of Professional Engineers, American Council of Engineering Companies,
and American Society of Civil Engineers. All rights reserved.**

These Supplementary Conditions amend or supplement the Standard General Conditions of the Construction Contract, EJCDC C-700 (2013 Edition). All provisions which are not so amended or supplemented remain in full force and effect.

The terms used in these Supplementary Conditions have the meanings stated in the General Conditions. Additional terms used in these Supplementary Conditions have the meanings stated below, which are applicable to both the singular and plural thereof.

The address system used in these Supplementary Conditions is the same as the address system used in the General Conditions, with the prefix "SC" added thereto.

SC-1.01.A.25 Add the following new paragraph immediately after paragraph 1.01.A.25:

> Any noted completion dates are to be considered Milestones for all intents and purposes under this Contract.

SC-1.01.A.32 Amend the first sentence of paragraph SC-1.01.A.32 to read as follows:

> The authorized representative of Engineer or Owner assigned to assist Engineer at the Site.

SC-1.01.A.40 Add the following new paragraph immediately after paragraph 1.01.A.40:

> Successful completion of any acceptance tests and submission and approval of operation and maintenance data shall be necessary for the work to be considered Substantially Complete and ready for its intended use.

SC-2.01A Delete Paragraph 2.01.A in its entirety and insert the following in its place:

A. Reference is made to the Instructions to Bidders with respect to the time when Bonds must be submitted.

SC-2.01B Delete Paragraph 2.01.B in its entirety and insert the following in its place:

B. Before any Work whatsoever is started, and before the Owner is obligated to execute the Agreement, Contractor shall deliver to Owner with copies to each additional insured identified in the Supplementary Conditions or elsewhere in the Contract Documents, certificates of insurance (or other evidence requested by Owner such as certified copies of policies) which Contractor is required to purchase and maintain in accordance with the requirements of Article 6.

SC-3.03 Add Paragraph 3.03.C immediately after Paragraph 3.03.B:

C. In the event of inconsistencies within or between parts of the Contract Documents, or between the Contract Documents and applicable references, standards and codes, the Contractor shall provide the better quality or greater quantity of work or comply with the more stringent requirement, either or both in accordance with the Engineer's interpretation.

SC-4.01.A Delete Paragraph 4.01.A in its entirety and insert the following in its place:

A. The Contract Time will commence to run on the day indicated in the Notice to Proceed.

SC-5.03 Add the following new paragraphs immediately after Paragraph 5.03.B:

C. The following reports of explorations and tests of subsurface conditions at or contiguous to the Site are known to Owner:

1. **Geotechnical Exploration Report titled "Railbird Alley Water Booster Pump Station" dated July 22, 2021.**

D. The following drawings of physical conditions relating to existing surface or subsurface structures at the Site (except Underground Facilities) are known to Owner:

1. none

E. The reports and drawings identified above are not part of the Contract Documents, but the "technical data" contained therein upon whose accuracy Contractor may rely, are expressly identified and established above., Contractor is not entitled to rely upon any other information and data known to or identified by Owner or Engineer.

SC-5.06 Add the following subparagraphs 5.06.A.1, 5.06.A.2, 5.06.A.3, and 5.06.A.4

1. The following reports related to Hazardous Environmental Conditions at the Site are known to Owner;

a) none

2. The following drawings regarding Hazardous Environmental Conditions at the Site are known to Owner;

a) none

3. The reports and drawings identified above are not part of the Contract Documents, but the "technical data" contained therein upon whose accuracy Contractor may rely, are expressly identified and established above., Contractor is not entitled to rely upon any other information and data known to or identified by Owner or Engineer.

SC-6.01A. Replace the second sentence of Paragraph SC-6.01.A with the following:

These bonds shall remain in effect until 24 months after the date when final payment becomes due or until completion of the correction period specified in paragraph 15.08, whichever is later, except as provided otherwise by Laws of Regulations or by the Contract Documents.

SC-6.01.G Add the following new paragraph immediately after paragraph 6.01.F:

G. The bonds to be supplied by the CONTRACTOR shall be on the forms included in the Contract Documents, and no other forms shall be acceptable.

SC-6.02.C Delete Paragraph 6.02.C in its entirety and insert the following in its place:

C. Contractor shall deliver to the Owner, with copies to each additional insured and loss payee identified in the Supplementary Conditions, insurance information including, but not limited to, Certificates, Endorsements and Declaration pages for all insurance policy(s) required to be purchased and maintained by the Contractor and its subcontractors and, prior to the anniversary date of all insurances, provide certificates of insurance for all insurances noting the renewal of all policies with the conditions as originally approved. Upon request by Owner or any other insured, Contractor shall also furnish copies of policies and documentation of applicable self-insured retentions and deductibles. Contractor may block out (redact) any confidential premium or pricing information contained in any policy or endorsement furnished under this provision.

SC-6.03.F Delete Paragraph 6.03.F in its entirety and insert the following in its place:

F. Contractor's pollution liability insurance: Contractor shall purchase and maintain a policy covering third-party injury, bodily injury, and property damage claims, including clean-up costs, as a result of pollution conditions arising from Contractor's operations and completed operations. If coverage required hereunder is issued on a claims-made form, such coverage shall apply with a retroactive date to reflect the date in which Work commenced and shall also be maintained continuously for a minimum of three (3) years following Project completion or included with an Extended Reporting Period for the equivalent minimum number of years requested.

SC-6.03.I. Delete Paragraph 6.03.I.3 in its entirety and insert the following in its place:

3. Contain a provision or endorsement that the coverage afforded will not be canceled, materially changed, or renewal refused with at least 30 days' notice to be given to owner from carrier.

SC-6.03 Add the following new paragraph immediately after Paragraph 6.03.J:

J. The limits of liability for the insurance required by Paragraph 6.03 of the General Conditions shall provide coverage for not less than the following amounts or

greater where required by Laws and Regulations:

1. Workers' Compensation, and related coverages under Paragraphs 6.03.A.1 and A.2 of the General Conditions:

    a. State: Statutory

    b. Employer's Liability:

    Bodily injury, Each Accident $ 100,000

    Bodily injury by disease, each employee $ 100,000

    Bodily injury /disease aggregate $ 500,000

2. Contractor's Commercial General Liability under Paragraphs 6.03.B and 6.03.C of the General Conditions:

    a. General Aggregate $ 1,000,000

    b. Products - Completed Operations Aggregate $ 1,000,000

    c. Personal and Advertising Injury $ 1,000,000

    d. Each Occurrence (Bodily Injury and Property Damage) $ 1,000,000

    e. Property Damage liability insurance will provide Explosion, Collapse, and Under-ground coverages where applicable.

3. Automobile Liability under Paragraph 6.03.D of the General Conditions:

    a. Combined Single Limit of $ 1,000,000

4. Excess or Umbrella Liability

    a. Per Occurrence $5,000,000

    b. General Aggregate $5,000,000

5. Contractor's Pollution Liability

    a. Each Occurrence $5,000,000

b. General Aggregate $5,000,000

6. For the Insurances listed above the following shall be included as additional insureds:

OWNER: City of Aberdeen
60 North Parke Street
PO Box 70
Aberdeen, MD 21001

OWNER'S CONSULTANT:

ENGINEER: GHD
1240 N Mountain Road
Harrisburg, PA 17112

ENGINEER'S CONSULTANT: Geo-Technology Associates, Inc.
3445-A Box Hill Corporate Center Drive
Abingdon, MD 21009

Morris & Ritchie Associates, Inc.
3445-A Box Hill Corporate Center Drive
Abingdon, MD 21009

Additional insureds as required by applicable State and local law/regulations.

K. In addition to the insurance required as summarized in SC-6.03.J, Contractor must obtain a separate insurance policy for the CSX boring to comply with the insurance requirements as outlined in the "**Facility Encroachment Agreement**" of the CSX Agreement No. CSX930303 provided in the Permits Approvals section of the Project Manual.

SC 6.05.A Delete Paragraph 6.05.A.1 in its entirety and insert the following in its place:

1. include the Owner, Contractor, Engineer, all Subcontractors, and the officers, directors, partners, employees, agents and other consultants and subcontractors of any of them, as insureds or named insureds. For purposes of the remainder of this Paragraph 6.05, Paragraphs 6.06 and 6.07, and any corresponding Supplementary Conditions, the parties required to be insured shall collectively be referred to as "insureds."

SC-6.05.B. paragraph: Amend paragraph 6.05.B by inserting the following sentence at the end of the

The policies of insurance required to be purchased and maintained by Contractor in accordance with this paragraph SC-6.05 shall comply with the requirements of

paragraph 6.03.I of the General Conditions.

As so amended, Paragraph 6.05.B remains in effect.

SC-6.05.C Delete Paragraph 6.05.C in its entirety and insert the following in its place:

C. Deductibles: Contractor shall be responsible for any deductible or self-insured retention. The purchaser of any required builder's risk or property insurance shall pay for costs not covered because of the application of a policy deductible.

SC-6.05.G Add new paragraph immediately following Paragraph 6.05.F

In lieu of Builder's Risk Insurance, Contractor shall choose to provide and maintain installation floater insurance for property under the care, custody, or control of Contractor. The installation floater insurance shall be a broad form or "all risk" policy providing coverage for all materials, supplies, machinery, fixtures, and equipment that will be incorporated into the Work. Coverage under the Contractor's installation floater will include:

1. any loss to property while in transit,

2. any loss at the Site, and

3. any loss while in storage, both on-site and off-site.

Coverage cannot be contingent on an external cause or risk, or limited to property for which the Contractor is legally liable. The Contractor will be solely responsible for any deductible carried under this coverage and claims on materials, supplies, machinery, fixture, and equipment that will be incorporated into the Work while in transit or in storage. This policy will include a waiver of subrogation applicable to Owner, Contractor, Engineer, all Subcontractors, and the officers, directors, partners, employees, agents and other consultants and subcontractors of any of them.

1. include the Owner, Contractor, Engineer, all Subcontractors, and the officers, directors, partners, employees, agents and other consultants and subcontractors of any of them, as insureds or named insureds. For purposes of this Paragraph 6.05, Paragraphs 6.06 and 6.07, and any corresponding Supplementary Conditions, the parties required to be insured shall collectively be referred to as "insureds."

SC-7.06 A Add the following sentence at the end of Paragraph 7.06 A of the General Conditions:

The Contractor shall not award work to subcontractors in excess of 50% of the contract price nor award the watermain installation portion of the contract to subcontractors without prior written approval of the Owner.

SC-7.09 Add new paragraph immediately after Paragraph 7.09.A:

B. The responsibility for determining the applicability and amount of any such taxes shall rest with the Contractor. The Owner makes no representation as to the applicability or inapplicability of any such tax or taxes and the Contractor shall not be entitled to rely upon any representation, expressed or implied, oral or written, of Owner or Engineer, or any officer, member, employee or agent of Owner or Engineer, with respect thereto.

SC-7.10.D Add the following new paragraph immediately after paragraph 7.10.D:

D. Contractor shall be responsible to familiarize himself and comply with all statutes, ordinances, rules and regulations, whether federal, state or local, which may be applicable to the Work to be performed and/or materials and equipment to be used or supplied in performance of the Agreement and shall base his bid prices on full compliance therewith. Owner and Engineer make no representation that such statutes, ordinances, rules and regulations as may be mentioned in the Contract Documents are the only applicable.

SC-7.12.B Add the following sentences at the end of Paragraph 7.12.B

In addition, the Contractor shall place special emphasis and attention on adhering to the safety requirements for:

7.12.B.1 Walking – Working Surfaces, OSHA Standard 1910.21 - 1910.30:

7.12.B.2 Hazardous Materials, OSHA Standard 1910 subpart H:

7.12.B.3 Process Safety Management Standard, OSHA Standard 1910.119:

7.12.B.4 Permit-required Confined Spaces, OSHA Standard 1910.146:

7.12.B.5 Lockout/Tagout, OSHA Standard 1910.147:

7.12.B.6 Safety and Health Regulations for Construction, OSHA Standard 1926 subpart P: as outlined by the Occupational Safety and Health Administration.

SC-7.15.A Amend Section SC-7.15.A by inserting the following sentences after the first sentence which ends with the word "loss".

The Contractor shall follow the following procedural steps in the event of an emergency hazardous waste situation:

1. Work will be halted immediately and all personnel evacuated from the areas affected by the material posing a potential hazard.

2. The Contractor's safety department and the Owner's representative will be contacted immediately.

3. Isolate the exposure area with warning tape or barricades.

4. Determine a course of action during discussions with the Owner on hiring a consultant or testing organization to identify the material encountered, if the material is hazardous, and the extent of the contamination.

5. Once and if the material is deemed to be hazardous, discuss with the Owner and/or consultant the proper procedures to follow to contain or remediate.

6. An independent subcontractor, specializing in abatement or remediation may be required.

7. When all hazardous materials have been removed or contained, so it poses no threat to personnel, work in the affected area will be resumed.

SC-7.17.A Add the following sentence at the end of Paragraph 7.17.A:

Unless otherwise specified, the warranty period shall be one (1) year from the date of substantial completion.

SC-15.01.B.1 Delete Paragraph 15.01.B.1 in its entirety and replace with the following:

1. At least 20 days before the date established in the Agreement for each progress payment (but not more often than once a month), Contractor shall submit to Engineer for review an Application for Payment filled out and signed by Contractor covering the Work completed as of the date of the application and accompanied by such supporting documentation as is required by the Contract Documents. Payment of material and equipment not incorporated in the Work shall only be made with Owner's written approval based solely at the Owner's discretion; the Owner is not obligated under any circumstances to pay for any delivered and/or stored material or equipment. If payment of materials and equipment not incorporated in the Work is pre-approved by Owner, the Contractor may request payment in which the Application for Payment shall also be accompanied by a bill of sale, invoice, or other documentation warranting that Owner has received the materials and equipment free and clear of all Liens, and evidence that the materials and equipment are covered by appropriate property insurance, a warehouse bond, or other arrangements to protect Owner's interest therein, all of which must be satisfactory to Owner.

SC-15.01.D.1 Delete Paragraph 15.01.D.1 in its entirety and replace with the following:

1. Thirty days after presentation of the Application of Payment to Owner with Engineer's recommendation, the amount recommended by Engineer will (subject to any Owner set-offs) become due, and when due will be paid by Owner to Contractor.

G. Substantial Completion for the project shall be achieved when all work, other than incidental corrective and incidental punch list Work is complete including the following:

1. All watermains and service lines shall be installed, tested, connected and in service.

SC-15.08.A Replace the first sentence of Paragraph SC-15.08.A with the following:

A. If within one year after the date of substantial completion (or such longer period of time as may be prescribed by the terms of any applicable special guarantee required by the Contract Documents or by any specific provision of the Contract Documents) any Work is found to be defective, or if the repair of any damages to the Site, adjacent areas that Contractor has arranged to use through construction easements or otherwise, and other adjacent areas used by Contractor as permitted by Laws and Regulations, is found to be defective, Contractor shall promptly, without cost to Owner and in accordance with Owner's written instructions:

SC-16.01.B and C Add the following new paragraphs immediately after paragraph 16.01.A:

B. If the OWNER suspends the Work in part, it shall have the authority to direct the CONTRACTOR to perform such other parts or items of the Work which, in his opinion, may be performed with favorable results and advantageously for the time of completion of the project, and shall notify the CONTRACTOR accordingly in writing.

C. If it should become necessary to suspend the Work for a sustained or indefinite period, the CONTRACTOR shall store all materials satisfactorily, and he shall take every precaution to prevent damage or deterioration of the Work performed. The CONTRACTOR shall resume the Work after such suspension upon written notice from the OWNER.

SC-17.02 Add the following new paragraph immediately after Paragraph 17.01.

SC-17.02 Arbitration

A. All matters subject to final resolution under this Article will be decided by arbitration in accordance with the rules of the American Arbitration Association, subject to the conditions and limitations of this paragraph. This agreement to arbitrate and any other agreement or consent to arbitrate entered into will be specifically enforceable under the prevailing law of any court having jurisdiction.

B. The demand for arbitration will be filed in writing with the other party to the Contract and with the selected arbitrator or arbitration provider, and a copy will be sent to Engineer for information. The demand for arbitration will be made within the specific time required in this Article, or if no specified time is applicable within a reasonable time after the matter in question has arisen, and in no event shall any such demand be made after the date when institution of legal or

equitable proceedings based on such matter in question would be barred by the applicable statute of limitations. The demand for arbitration should include specific reference to Paragraph SC-17.02.D below.

C. No arbitration arising out of or relating to the Contract shall include by consolidation, joinder, or in any other manner any other individual or entity (including Engineer, and Engineer's consultants and the officers, directors, partners, agents, employees or consultants of any of them) who is not a party to this Contract unless:

1. the inclusion of such other individual or entity is necessary if complete relief is to be afforded among those who are already parties to the arbitration; and

2. such other individual or entity is substantially involved in a question of law or fact which is common to those who are already parties to the arbitration and which will arise in such proceedings.

D. The award rendered by the arbitrator(s) shall be consistent with the agreement of the parties, in writing, and include a concise breakdown of the award, and a written explanation of the award specifically citing the Contract provisions deemed applicable and relied on in making the award.

E. The award will be final. Judgment may be entered upon it in any court having jurisdiction thereof, and it will not be subject to modification or appeal, subject to provisions of the Laws and Regulations relating to vacating or modifying an arbitral award.

F. The fees and expenses of the arbitrators and any arbitration service shall be shared equally by Owner and Contractor.

SC-18.09 – Add the following new paragraphs immediately after Paragraph 18.08.

18.09 Non-Discrimination and Diverse Suppliers

A. Contractor shall comply with all state and federal laws prohibiting discrimination in hiring or employment opportunities. In the event of the Contractor's noncompliance with any such laws, this Agreement may be terminated or suspended, in whole or in part, and Contractor may be declared temporarily ineligible for further contracts.

CITY OF ABERDEEN

Harford County, Maryland

DEPARTMENT OF PUBLIC WORKS

ABERDEEN WATERMAIN EXTENSION
CONTRACT NO. 21-12

HARFORD COUNTY STANDARD SPECIFICATIONS AND DETAILS FOR WATER AND SEWER MAINS (418 pages)

HARFORD COUNTY

DEPARTMENT OF PUBLIC WORKS
DIVISION OF WATER AND SEWER

STANDARD SPECIFICATIONS

AND DETAILS FOR

WATER MAINS & SEWER MAINS

DAVID R. CRAIG
HARFORD COUNTY EXECUTIVE

MARY F. CHANCE
DIRECTOR OF ADMINISTRATION

TIMOTHY F. WHITTIE, P.E.
DIRECTOR OF PUBLIC WORKS

JOEL V. CAUDILL, P.E.
DEPUTY DIRECTOR OF WATER & SEWER

HARFORD COUNTY GOVERNMENT

DEPARTMENT OF PUBLIC WORKS
DIVISION OF WATER AND SEWER

MEMORANDUM

DATE: November 10, 2014

TO: See Distribution List

FROM: Mary F. Chance
Director of Administration

RE: Revisions to Parts 25, 26, 27 and the addition of new Part 28 to the Rules and Regulations

Three parts of the Rules and Regulations of the Division of Water and Sewer have recently been revised and a new part has been added. Through public advertisement, a hearing was held on October 24, 2014 to discuss the proposed changes. Part 25- Design Guidelines, Part 26- Standard Specifications and Part 27- Approved Materials List were revised. New Part 28- Approved Contractors/Vendors for Auxiliary Water and Sewer Construction and Testing was added. The revised pages of these sections are attached.

The changes to the Rules and Regulations became effective on the date noted above. Please replace the current pages with the attached sheets in your copy of the Rules and Regulations. If you prefer, the complete document may be obtained in CD form from the Division of Water and Sewer or downloaded from the Harford County website in the next several weeks.

Enclosure
DWI/hs
Cc: David R. Craig, Harford County Executive
Kathryn L. Hewitt, Harford County Treasurer
Margaret Hartka, Law Department
Timothy F. Whittie, P.E., Director of Public Works
Joel V. Caudill, P.E., Deputy Director of Water and Sewer
Jacqueline K. Ludwig, Chief of Water and Sewer Administration and Engineering
Darryl W. Ivins, Engineer, Division of Water and Sewer

The following Standard Specifications and Details apply to the operation of the Division of Water and Sewer and is Part 26 of the General Rules and Regulations that are promulgated in accordance with Section 807 of the Harford County Charter.

STANDARD SPECIFICATIONS AND DETAILS
for
WATER AND SEWER MAINS

Part 26

HARFORD COUNTY
DEPARTMENT OF PUBLIC WORKS
DIVISION OF WATER AND SEWER

November 10, 2014

HARFORD COUNTY, MARYLAND

STANDARD SPECIFICATIONS AND DETAILS FOR

WATER MAINS AND SEWER MAINS

All Water and Sewer construction projects shall be built in accordance with this document and any adopted revisions. All construction documents shall incorporate the latest revision.

Revised: 11/10/14

STANDARD SPECIFICATIONS
TABLE OF CONTENTS

No. of Pages

PART 1 – GENERAL REQUIREMENTS

Division 1 - General Requirements

Section 01000 - General Provisions 39

PART 2– STANDARD SPECIFICATIONS

Division 2 - Site Work

Section 02012 - Test Pits 4
Section 02050 - Removal or Abandonment of Existing Utilities 6
Section 02110 - Clearing and Grubbing 4
Section 02240 - Aggregate Backfill 4
Section 02250 - Trench Excavation, Backfill and Compaction 12
Section 02300 - Boring and/or Jacking Pipe 6
Section 02310 - Directional Boring or Pressure Sewer 6
Section 02400 - Tunneling 12
Section 02660 - Water Mains 16
Section 02662 - Water Valves and Appurtenances 6
Section 02664 - Water Services and Appurtenances 8
Section 02666 - Fire Hydrants 6
Section 02700 - Gravity Sanitary Sewer and House Connections 14
Section 02710 - Sanitary Sewer Manholes 8
Section 02720 - Sanitary Sewer Force Mains 6
Section 02731 - Low Pressure Sewer 8
Section 02800 - Restoration 4
Section 02820 - Turf Establishment 12
Section 02830 - Sodding 4
Section 02850 - Soil Stabilization Matting 4
Section 02860 - Tree Protection 4
Section 02865 - Trees and Shrubs 8
Section 02870 - Fences 6

Division 3 - Concrete

Section 03200 - Concrete Reinforcement 4
Section 03300 - Cast In Place Concrete 20
Section 03400 - Precast Concrete Utility Structures 6
Section 03500 - Concrete Repairs 4

STANDARD SPECIFICATIONS
TABLE OF CONTENTS (*continued)*

No. of Pages

Division 4 - Masonry
Section 04100 - Mortar 4
Section 04200 - Brick Masonry 6

Division 5 - Metals
Section 05500 - Miscellaneous Metals 6

Division 6 – NOT USED

Division 7 - NOT USED

Division 8 - NOT USED

Division 9 - NOT USED

Division 10 - NOT USED

Division 11 - Equipment
Section 11307 - Sewage Grinder Pumping Units 14

PART 3– STANDARD DETAILS

Standard General Details ..... G1 thru G21
Standard Water Details ..... W1 thru W38
Standard Sewer Details ..... S1 thru S34
Standard Low Pressure Sewer Details ..... LP1 thru LP20

GENERAL REQUIREMENTS

Issued: 3/15/09

TABLE OF CONTENTS
SECTION 01000
GENERAL PROVISIONS

PAGE NO.

1.0 Definitions 01000-1

2.0 Bid Requirements and Conditions
A. Preparation of Bid 01000-4
B. Pre-Bid Conference 01000-4
C. Interpretation of Approximate Estimate 01000-5
D. Bid Security 01000-5
E. Public Opening of Bids 01000-5
F. Examination of Plans, Specifications and Site 01000-5
G. Disqualification of Bidders 01000-5
H. Rejection of Irregular Bids 01000-6

3.0 Award and Execution of Contract
A. Consideration of Bids 01000-6
B. Award of Contract 01000-6
C. Contract Bond 01000-6
D. Execution of Contract 01000-6
E. Service of Notice 01000-7

4.0 Scope of Work
A. Intent of Work to be Done 01000-7
B. Schedule of Work to be Done 01000-7
C. Material to be Furnished by the Contractor 01000-7
D. Contract Drawings 01000-8
E. Existing Utilities Shown on Drawings 01000-9
F. Removal and Disposal of Structures and Obstructions 01000-9
G. Making Connections to Existing Structures 01000-9
H. Construction in Easements and Rights-of-Way 01000-9
I. Owner May Increase or Decrease Quantities 01000-10
J. Additional Work 01000-11
K. Extra Work 01000-11
L. Omitted Items 01000-13
M. Unauthorized Work 01000-13
N. Rights in and use of Materials Found on the Work 01000-13
O. Pipe Lines to be Kept Clean 01000-14
P. Cleaning Up 01000-14
Q. Water Supply 01000-14
R. Sanitary Arrangements 01000-14
S. Care and Protection of Work 01000-14
T. Rock Shown on Drawings 01000-15

5.0 Control of Work and Materials
A. Supervision and Direction of Work 01000-15
B. Notices to Superintendents 01000-15
C. Lines, Grades, Elevations, Etc. 01000-15
D. Inspection 01000-16

TABLE OF CONTENTS
(*Continued)*

		PAGE NO.
E.	Authority and Duties of Inspectors	01000-17
F.	Office Space for Inspector	01000-18
G.	Defective Work and Defective Materials	01000-18
H.	Failure to Remove and Renew Defective Materials and Work	01000-19
I.	Suspension of Work	01000-19
J.	Interpretations by Director	01000-19
K.	Alterations of Plans or of Character of Work	01000-20
L.	Coordination of Plans, Specifications, and Special Provisions	01000-20
M.	Cooperation of Contractor Required	01000-20
N.	Other Contractors	01000-21
O.	Source of Supply and Quality of Materials	01000-21
P.	Storage of Materials	01000-21
Q.	Conditional Acceptance	01000-22
R.	Final Acceptance	01000-22

6.0 Legal Relations and Responsibility to the Public

A.	Laws to be Observed	01000-23
B.	Contractor's and Subcontractor's Insurance	01000-23
C.	Patent Fees, Royalties and Licenses	01000-24
D.	Permits and Licenses	01000-24
E.	Claims for Damages	01000-24
F.	Public Convenience and Safety	01000-25
G.	Use of Explosives	01000-25
H.	Maintenance of Traffic	01000-26
I.	Preservation and Restoration of Property, Trees, Monuments, Etc.	01000-26
J.	Requirements of the Maryland Department of State Forests and Parks	01000-27
K.	Indemnification of Owner	01000-27
L.	No Waiver of Legal Rights	01000-27
M.	Waiver of Contract	01000-27
N.	Prequalification Requirements	01000-28
O.	Sanitary Sewage Overflow Protection	01000-28

7.0 Prosecution and Progress

A.	Time of Beginning and Completion	01000-29
B.	Sub-Letting and Assignment	01000-30
C.	Workmanship	01000-30
D.	Competence of Labor	01000-31
E.	Abandonment of or Delay in Work	01000-31
F.	Default or Failure to Complete Work on Time	01000-31

8.0 Measurement and Payment

A.	General	01000-32
B.	Monthly Estimates	01000-33
C.	Final Estimate	01000-34
D.	Final Acceptance and Payment	01000-35
E.	Evidence of Payment	01000-35
F.	Maintenance Bond	01000-35
G.	Termination of the Owner’s Liability	01000-36

SECTION 01000
GENERAL PROVISIONS

1.0 DEFINITIONS

Whenever the words defined in this section, or pronouns used in their stead occur in the contract, they shall have the meanings here given:

A. Whenever the words APPROVED, ACCEPTABLE, or words of like import are used in the drawings or specifications, it shall be understood that "Approved by or Acceptable to" the Director is intended, unless otherwise stated.

B. BID - The offer of the bidder submitted on the prescribed bid form to perform the prescribed work and to furnish the prescribed labor and materials in accordance with a set of Contract Specifications and/or Documents, for the consideration of payment at the unit and/or lump sum price stated and submitted on the prescribed forms.

C. BID ITEM - An item of work specifically described and for which a price, either unit or lump sum, is provided. It includes the performance of all work and furnishing of all labor, equipment and materials, described herein or described in any supplemental specifications or Special Provisions.

D. BID SECURITY - The security designated in the Bid, to be furnished by the bidder as a guarantee of good faith to enter into a Contract with the OWNER, if the work of constructing the improvement is awarded to him. The Bid Security may be a bid bond or certified check.

E. BIDDER - Any individual, firm or corporation submitting a bid for the prescribed work contemplated, acting directly or through a duly authorized representative.

F. CHANGE ORDER - A written order to the Contractor, signed by the Director of Procurement on behalf of the Owner, ordering a change in the work from that originally shown by the plans and specifications that has been found necessary. If the work is of a nature involving an adjustment of unit price, a Supplemental Agreement shall be executed. Change Orders duly signed and executed by the Contractor and County constitute authorized modifications of the Contract.

G. CLOSED WATER FIRE SPRINKLER SYSTEM - A water service has a fire control system that utilizes sprinkler heads without the use of any type of pumping apparatus. In addition, this system has no fire hydrants or fire hose connection points.

H. CONDITIONAL ACCEPTANCE – the date the operational certificate is executed and the one-year maintenance period begins.

I. CONSTRUCTION EASEMENT - The area secured for temporary use and or modification for the purpose of facilitating work to be accomplished during

construction.

J. CONTRACT - The written agreement executed between the Owner and the successful bidder, covering the performance of the work and the furnishing of labor and materials, by which the Contractor is bound to perform the work and furnish the labor and materials, and by which the Owner is obligated to compensate him therefore at the mutually established and accepted rate or price.

K. CONTRACT BOND - The approved form of security executed by the Contractor and his Surety or Sureties, guaranteeing complete execution of the Contract and all supplemental agreements and changes pertaining thereto. Harford County Government will accept insurance company Performance, Payment and/or Maintenance Bonds only from companies holding certificates of authority as acceptable sureties as published annually in the Federal Register, Department of the Treasurer, Fiscal Service, Department Circular 570.

EXCEPTION

Performance Bonds can be accepted from Harford Mutual Insurance Company up to a total aggregate amount of $500,000. Maintenance Bonds can be accepted from Harford Mutual Insurance Company with no amount limit.

L. CONTRACT DOCUMENTS shall include the invitation for bids, instructions to bidders, bid contract and contract bond, these specifications, supplemental specifications, all general or special provisions, general and detailed plans, and notice to proceed; also, any written change orders, written mutual understandings and agreements that are required to complete the construction of the work in an acceptable manner, including authorized extensions thereof.

M. CONTRACT DRAWINGS show the location, dimensions and sizes of the materials on the lines and slopes, at the depths with the connections and the manner in which they are to be placed as called for by the Specifications outlining the work and the materials to be provided for and placed under the contract, or in accordance with such changes as may be approved from time to time during the progress of work, as hereinafter provided.

N. CONTRACT ITEM - The obligation of the Contractor, including the performance of all work and furnishing of all labor and the materials described in the respective articles or sections of the Specifications and Contract or in the Special Provision which are made a part thereof.

O. CONTRACT TIME - The number of working days or calendar days shown in the bid, indicating the time allowed for the completion of the work contemplated in the contract and any modification thereto.

P. CONTRACTOR shall mean the party of the second part, or the agent appointed to act for the said party, entering into the contract for the performance of the work required by it.

Q. COUNTY - See OWNER

R. DIRECTOR shall mean the Director of the Harford County Department of Public Works, acting for the Department or its duly authorized agents, said agent acting severally within the scope of the Particular duties entrusted to him.

S. ENGINEER shall mean the Registered Professional Engineer or a duly authorized agent thereof, contracted by Harford County to provide any engineering services that the County may require or authorize.

T. ESTABLISHED GRADE - The profile grade as anticipated and approved for future construction in order to meet geometric criteria approved by established standards of construction.

U. FINAL ACCEPTANCE – the date certified by the Director when the work is totally complete in accordance with the Contract Documents and the Contractor has fulfilled all obligations thereunder, including, but not limited to all punch list work related to the one-year maintenance period and fulfillment of the warranty.

V. FIXED-PRICE ITEMS - These unit prices are established and prescribed by the County to compensate for the cost of work and materials that may be necessary for the proper completion of the contract, and the quantities of which are not amendable to reliable quantitative estimation prior to the construction. The fixed-price items are shown on the bid sheets with estimated quantities, fixed price, and the estimated total cost imprinted prior to the issuance of the contract documents to bidders.

W. NOTICE TO PROCEED - A written notice to the Contractor of the date on which the contract period begins.

X. OPEN WATER FIRE SPRINKLER SYSTEM - A water service that has a fire control system that utilizes hoses, hose connection points, or any type of pumping apparatus.

Y. OPERATIONAL CERTIFICATE: A form signed by the Developer and all responsible agents of the Director which states all of the work is complete in accordance with the contract documents and that all punch list work has been completed which may have been identified in the operational walkthrough. The operational certificate will not be fully executed until all punch list work has been completed, the one-year maintenance bond has been submitted and approved, (Capital Projects) a release of liens document has been submitted (Capital Projects) and all necessary as-built drawings have been submitted and approved.

Z. OWNER shall mean the Harford County Department of Public Works, Bel Air, Maryland. Also referred to as County or Department.

AA. PERPETUAL EASEMENT - The area secured and reserved by the Owner for right-of-use in constructing and maintaining proposed work and appurtenances thereto.

BB. SPECIAL PROVISIONS - Special clauses supplemental to these specifications, setting forth requirements peculiar to the specific work included in the contract documents and right-of-way agreements.

CC. SPECIFICATIONS - The direction, provisions and requirements contained in these Standard Specifications, together with all written agreements made and/or to be made, pertaining to the method and manner of performing the work, or to the quantities and qualities of the materials to be furnished under the contract.

DD. SUB-CONTRACTOR - Any individual firm or corporation undertaking the engineering or construction of a part of the work under the terms of the contract, by virtue of an agreement with the contractor, who, prior to such undertaking, received the consent of the Surety and the approval of the Owner.

EE. SURETY - The corporate body approved by the Owner which is bound with and for the Contractor who is primarily liable and which engages to be responsible for his payment of all debts pertaining to and for his acceptable performance of the work for which he has contracted.

2.0 PROPOSAL REQUIREMENTS AND CONDITIONS

A. PREPARATION OF BID

In completing bid forms bidders shall be governed by the following provisions:

1. Bids must be made on the blank forms provided by the Owner. The blank spaces in the bid form, except as otherwise noted, must be filled in, and no change shall be made in the phraseology of, or in the items mentioned in the bid form. Any such change shall be cause for rejection of the bid.
2. Bids must be signed in ink by the bidder with the signature in full. When an unincorporated business is a bidder, the agent who signs the business name to the bid shall state, in addition, the names and addresses of the individuals composing the firm. When a corporation is a bidder, the person signing shall state under the laws of what State the corporation is chartered and the names and titles of the officers having authority under the bylaws to sign contracts. The bid shall also bear the seal of the corporation, attested by its secretary. Anyone signing the bid as agent must file with it legal evidence of his authority to do so. Post Office address, county and state, and telephone number must be given after the signature of the person signing the bid.
3. Each bid shall specify a unit price or lump sum price, written with ink in both words and figures, for each of the separate items as called for. In case of discrepancy between the written words and figures, the sum denoted by written words shall be accepted.

   The bid may contain certain fixed price items which have been included merely for purpose of obtaining a contract price in the case that these items may be needed.

B. PRE-BID CONFERENCE

Bidders are not required, but are strongly encouraged to attend the Pre-Bid Conference but are invited to do so voluntarily.

C. INTERPRETATION OF APPROXIMATE ESTIMATE

Bidders are cautioned that the estimate of quantities contained in the bid will serve, as far as the Contract is concerned, only for the purpose of comparing bids. The basis of payment will be actual quantities of material supplied and of work performed and accepted, and if, upon the completion of the project the actual quantities should show either increase or decrease from the quantities shown in the approximate estimate, the unit prices bid in the Bid will still prevail.

D. BID SECURITY

No bid will be considered unless accompanied by a "Bid Security" of the character and amount indicated in the Bid Form, made payable to the Owner.

E. PUBLIC OPENING OF BIDS

Bids will be opened publicly and read at the hour and on the date set in the "Advertisement for Bids" or Notice to Contractors," in the office of the Owner. Bidders or their authorized agents are invited to be present.

F. EXAMINATION OF PLANS, SPECIFICATIONS AND SITE

It shall be the bidders responsibility to make a personal examination of the location of the proposed work and of the surroundings thereof, and their responsibility to thoroughly acquaint themselves with the details of the work to be done and all the conditions and obstacles likely to be encountered in the performance and completion of the work. It shall be the bidders further responsibility to inform themselves as to the facilities for the transportation, handling and storage of equipment and materials, and their responsibility to carefully study the plans, specifications and other contract documents and thoroughly satisfy themselves as to the conditions under which the work is to be done and as to the character, qualities and quantities of work to be performed and materials to be furnished, and be prepared to execute a finished job in every particular without any extra charge whatever, except as may be specifically provided for elsewhere in these contract documents. Test borings, rock profiles, rock classification, pipe or other underground objects where shown on the Contract drawings are approximation only and are not representations of the conditions that are actually present in the construction sites. Should the Contractor encounter quicksand, springs or any other materials or conditions not shown in the Contract Documents it shall be understood that the Owner has not warranted that such condition is or is not present. Therefore, claims arising from increase or decrease quantities, or otherwise, shall be disposed of in accordance with the requirements of the Specifications governing the particular question at issue.

G. DISQUALIFICATION OF BIDDERS

In addition to the causes stated in the County's Procurement Law, the following causes will be considered sufficient to disqualify any bidder:

1. Interest by the same person in more than one bid.
2. Collusion among or between bidders.
3. Unbalanced bids: That is, bids in which the prices bid for some items are out of all proportions to those bid for others. Whether or not such bid is the lowest submitted.
4. Lack of responsibility on the part of bidders.

H. REJECTION OF IRREGULAR BIDS

Any Bid that has any omission, addition or item not called for in the Bid Form or that has irregularities of any kind, may be rejected. Any bid that does not contain prices set opposite each of the several items for which there is a quantity indicated or required in the Bid Form, or any bid which shall in any manner fail to conform to the conditions of the published notice inviting bids may be rejected.

3.0 AWARD AND EXECUTION OF CONTRACT

A. CONSIDERATION OF BIDS

Following the public opening of the Bids, they will be audited and studied for compliance with the Specifications. In the event of a discrepancy between the unit bid prices and the extensions (product of quantity and unit price), the unit price will govern.

B. AWARD OF CONTRACT

1. Contracts shall be awarded in accordance with the County Code in effect at the time of the award. The County reserves the right to waive or excuse any irregularities in awarding of contracts by taking curative action.
2. The Owner will hold bid securities submitted with the bids of the three (3) lowest responsible bidders until the execution and delivery of the contract documents, whereupon they shall be returned. All other bid securities will be returned following the opening and evaluation of bids.

C. CONTRACT BOND

The successful bidder will be required to be bonded to the Owner for a sum equal to 100% of the amount of his bid according to the form of bond attached to the Bid Form. All Contract Bonds submitted will be deemed to include all of the Conditions and Covenants stated in the Bond Forms provided by the County.

D. EXECUTION OF CONTRACT

The contract shall be signed by the Contractor and satisfactory contract Bonds furnished within ten (10) days after he has received notice of award. In case of failure on the part of the Contractor to enter into a contract and furnish the Contract Bonds as required, the guarantee accompanying his Bid will be forfeited to the Owner. Award may then be made to the next lowest responsible bidder, or the work readvertised, or the Owner may proceed in any lawful manner it deems advisable to secure the accomplishment of the work.

E. SERVICE OF NOTICE

The mailing, in a United States post office box, of a written communication, notice or order, addressed to the Contractor at the business address filed with the Owner, or to this office at the site of the work, shall be considered as sufficient service upon the Contract of such communication, notice or order, and the date of service shall be the date of such mailing.

4.0 SCOPE OF WORK

A. INTENT OF WORK TO BE DONE

Any stated intent as to work or improvement is to prescribe that complete work or improvement which the contractor undertakes to do in full compliance with the Contract Documents, together with any authorized alteration, special provisions and supplemental agreements. The Contractor shall perform all items of work covered and stipulated in the Contract Documents, together with any authorized alterations, special provisions, extra work and supplemental agreements, all in accordance with the lines, grades, cross sections and dimensions shown on the plans in accordance with these Specifications.

B. SCHEDULE OF WORK TO BE DONE

Within fifteen (15) days after the award of the Contract, or as specified in the contract documents, the Contractor shall submit to the Director for approval a complete progress schedule for the work to be done in the form required by the Contract Documents. As a minimum, the schedule shall show the Notice to Proceed, the number of locations where work is proposed to be done concurrently, the kind of work so scheduled, and the dates the different kinds of work are scheduled to begin and to be completed. Allowance in the schedule shall be made for normal interruptions to operations due to repairs and maintenance of equipment and delays which are likely to be encountered due to weather conditions, material deliveries, and other similar interruptions that would affect the schedule. The schedule shall demonstrate that the Contractor will complete the work within the time specified, and the Contractor shall, if required, give evidence of his ability to carry out the work in accordance with the schedule.

The schedule shall be used to monitor the Contractor's progress and shall be

updated by the Contractor monthly as required by the Engineer.

C. MATERIAL TO BE FURNISHED BY THE CONTRACTOR

1. The Contractor shall do all the work and provide all labor tools, tackle, apparatus, machinery, equipment, transportation, pumping, insurance (both compensation and public liability) and materials, except as otherwise provided for, necessary to complete the work in all its parts, as shown or called for in, or as may be reasonably implied from, the Plans and Specifications. He shall complete the entire work, together with such extra work as may be required, at the prices fixed therefore, to the satisfaction of the Owner and in accordance with the contract documents.
2. Contractor shall submit for approval, shop drawings and/or materials specifications/certifications of all materials used in the project to the Owner, except for materials included in the current Approved List of Supplies and Materials for Water and Sewer Construction.
3. Within fifteen (15) days after the contract is awarded, the Bidder shall be required to furnish on forms provided by the Department of Public Works a complete statement of the origin, composition and manufacture of any or all materials to be used in the work, together with samples, as designated by the Owner, which samples may be subjected to the tests provided for in these specifications to determine their qualities and fitness for the work. All materials must be approved by the Director in writing before their delivery to the job site.
4. The Owner reserves the right to inspect pipe, joining material and all other material to be incorporated in the project at place of manufacture. Notice shall be given to the Director in sufficient time to allow for inspection of such materials at the place of manufacture.
5. If the Contractor makes claims regarding unavailability of material which would delay the progress of work, then the Contractor shall furnish satisfactory evidence to the Owner that all efforts have been made by him to procure the material on time.
6. Where any article is specified by proprietary name, trade name, and/or name of manufacturer, with or without the addition of such expressions as "or equal" or "or approved equal", it is to be understood that the article named and the quality thereof is intended to represent the minimum acceptable standard, which is subject to the approval of the Director; and it is distinctly understood; (1) that the Director is to use his own judgment in determining from time to time, whether or not any article or thing proposed to be substituted is the equal of any article or thing so specified; (2) that the decision of the Director on all questions of equality shall be final; (3) that, in the event of any adverse decision of the Director no claim of any sort shall be made or allowed against the County.

D. CONTRACT DRAWINGS

1. The contract drawings show the location, dimensions and sizes of the

materials, on the lines and slopes, at the depths, with the connections and the manner in which they are to be placed as called for by the Specifications outlining the work and the materials to be provided for and placed under the contract, or in accordance with such changes as may be approved from time to time during the progress of the work, as hereinafter provided.

2. The ground profiles shown on the drawings represent the grade elevations along the centerline of the structure or utility. Should the actual elevations of the profile over the structure differ from those shown in the drawings the Contractor shall be entitled to no additional compensation over the unit price bid for the actual depth classification encountered in the linear foot of pipe trenches, or the actual number of cubic yards excavated unless such difference exceeds two (2) feet. No additional payment, unless negotiated, will be made on lump sum bids where the actual elevations of the ground or surface over the structure differ from those shown on the profiles.

E. EXISTING UTILITIES SHOWN ON DRAWINGS

1. Water mains, storm drains, sanitary sewers, gas mains, and other utilities are shown on the drawings in accordance with the best information available for the information of the Contractor. The Owner assumes no responsibility for accuracy or completeness of information shown. It is the responsibility of the Contractor to verify the actual location of existing utilities prior to beginning work, and to maintain any utility location markings at no additional cost to the County.

2. Existing mains, services and their connections shall be carefully protected and any damage to them caused by the work, shall be immediately repaired using materials of the kinds damaged to the satisfaction of the Director by the Contractor at his expense.

F. REMOVAL AND DISPOSAL OF STRUCTURES AND OBSTRUCTIONS

1. All structures, materials, or resources within the right-of-way or construction area, which are not to remain in place or have not been designated for use in the construction, shall remain the property of the Owner, and shall be salvaged and stored or otherwise disposed of by the Contractor as hereinafter specified, indicated on the plans, or approved by the Director.

2. Materials resulting from work performed by the Contractor within the limits of construction and designated by the Director as unwanted will become the property of the Contractor and will be disposed of at the Contractor's expense off the job site.

G. MAKING CONNECTIONS TO EXISTING STRUCTURES

The Contractor shall, at his own cost and expense and as part of his work under the contract, furnish all labor, materials, tools and appliances, and do all work required for making connections to existing water or sewer structures, and the cost of making such connections shall be included in the prices bid for excavation and refill and refurnishing and laying pipe, unless otherwise specified in the Bid or Special Provisions. Connections to existing structures shall be made only after all new lines

are satisfactorily tested and approved by the Director. Actual dates and times of connection shall be approved by the Director.

H. CONSTRUCTION IN EASEMENTS AND RIGHTS-OF-WAY

Perpetual easements or rights-of-way will be secured by the County without cost to the Contractor. The County will also obtain permission from the owners of property to be occupied during construction, temporary construction easements outside the limits of these perpetual easements or rights-of-way until authorized to do so by the Director. The Contractor shall confine his operations strictly within the limits of the perpetual easements and rights-of-way and construction easements, unless he has a written permission of the owner of the adjacent property to occupy additional ground. A copy of the written permission shall be furnished to the Director prior to the start of work. The Contractor must complete all the work required by the Forest Conservation Plan developed for the project. All trees located within the Maryland State Highway Administration Right-of-Way must be protected and saved from harm in accordance with the regulations of the Maryland State Department of Forestry (See Section 1000-6.0-J).

The Contractor shall so conduct his work in the easements and rights-of-way that there will be a minimum of disturbance of the properties crossed. Fences shall be disturbed as little as possible and if damaged or removed shall be replaced or restored at least equal to their original condition at the expense of the Contractor.

Upon completion of the work, the Contractor shall, at his own expense, clean up within the easements and rights-of-way and shall restore them at least to their original condition as part of the original Bid Contract Price. Any damage to property outside the limits of the easements or rights-of-way shall be repaired or replaced by the Contractor at his own expense.

No arrangements will be made for any means of access to the perpetual easements, rights-of-way or construction easements by the County; the Contractor shall therefore be required to make his own arrangements for access to the work within these points. Contractors are cautioned that only those areas designated on the Plans have been obtained for their Construction operations by the County. If they feel that these areas are insufficient for their needs they must account for the cost of additional easements or rights-of-way and/or special construction methods in their bidding of the work. Notification to the Director is required in writing of any additional easement acquired by the Contractor.

I. OWNER MAY INCREASE OR DECREASE QUANTITIES

1. The Owner reserves the right to increase or decrease the quantity of material to be furnished or work to be done under a unit price contract by not more than ten (10) percent of the original bid quantity of any item, except where items of indeterminate quantity are involved such as Fixed Price Items in which a 25% increase, decrease or complete elimination of the original bid quantities shall be allowed. Such increase or decrease shall be allowed wherever the Director deems it advisable or necessary and such

increase or decrease shall in no way violate the contract.

2. The Contractor will be paid for the actual quantity of authorized work done or material furnished under each item of the Bid, at the unit price stipulated for such item. In case the quantity of any item is increased as above provided, the Contractor shall not be entitled to compensation over and above the unit price bid for such item; and in case the quantity of any item is decreased as above provided, the Contractor shall have no claim for damages on account of loss of anticipated profits because of such decrease.

J. ADDITIONAL WORK

In instances where additional quantities of items noted in the Bid Form are required, the Contractor shall provide the necessary additional work, to fully complete the project regardless of the estimated quantities on the Bid Forms, and shall receive payment in full for such work at the prices shown in the Bid or supplemental agreement for similar classes of work in the same manner as if the quantities had been included in the original estimate of quantities.

K. EXTRA WORK

1. The Contractor shall do such extra work as may be ordered by the Director, in writing. No claim for extra work shall be considered or allowed unless the work has been ordered in writing by the Director. The Director and Contractor shall make every effort to come to a mutually agreed upon unit or lump sum price for the extra work. If a mutual agreement cannot be reached, the Director may require the Contractor to do such work on a force account basis to be compensated in accordance with the following:

   Separate itemized statements and itemized bills, covering the extra work, shall be delivered to the Director before the fifteenth (15th) day of the following month. To all such bills shall be attached vouchers showing the cost of materials supplied by the Contractor that have actually been incorporated into such extra work. The Contractor shall permit such examination of his books, vouchers and accounts as the Director may require in checking bills for extra work. The amount to be paid the Contractor for extra work shall be made up of the following items:

   a. Wages of necessary day laborers and foreman actually employed on extra work, for such time as they are so employed plus forty-five (45) percent. This 45% shall include and cover all overhead, insurance, workmen's compensation, etc. Superintendent's time will not be allowed.

   b. Actual purchase price, as paid by the Contractor, for materials actually incorporated into the extra work, to which costs shall be added an amount of equal to fifteen (15) percent plus the prevailing Maryland State Sales Tax.

   c. Rental for vehicles, or heavy equipment or machinery while actually and actively used on the extra work. Rental rates shall be 100% of the current rates recommended by the Rental Rate Blue Book for

Construction Equipment based on the following schedule:

If time of use is 3 days or less, figure hourly rates from the schedule of rates per day.

If time of use is more than 3 days and less than 3 weeks figure the hourly rate from the schedule of rates per week. If time of use is 3 weeks or more, figure the hourly rate from the schedule of rates per month.

To compute hourly rate use 8 hours per day, 40 hrs per week, 176 hours per month.

d. Cost of work performed by an authorized subcontractor on extra work plus ten (10) percent.

2. Payment for extra work shall not include any allowance for the time of superintendents, timekeepers, waterboys, or of any workmen or foremen not employed upon the extra work in question for a definitely and easily ascertainable period, nor for insurance of employees or for damage to the public, nor the use, maintenance or repair of tools, nor for the administrative expenses, nor for any rent, transportation, interest, depreciation or bonding cost or any other overhead, collateral or estimated expense, nor for any profit, all of which costs shall be deemed to be, and shall be, included in the allowance of forty-five (45) percent, and fifteen (15) percent, on labor and material items respectively.

3. All extra work shall be done as economically and expeditiously as possible, and under sufficient but not disproportionate supervision. Labor shall be furnished at the current rates and materials shall be charged at the lowest market prices. The Owner may, at its option, furnish any materials required for extra work and the Contractor shall not be entitled to any allowance or percentage on materials so furnished; and likewise the Owner may supply any necessary machinery or equipment, and the Contractor shall not be entitled to any allowance thereupon.

4. The decision of the Director shall be final and binding upon all questions relating to extra work. If he shall deem that any extra work bill is unreasonable or improperly made up in any particular, he shall be empowered to require its revision and adjustment in accordance with such terms as he shall judge to be fair and reasonable.

5. The Director will certify for payment, proper bills made out as above provided and submitted before the prescribed date, upon each written order for extra work. Payment, as approved, for the work done under each extra work order completed under the contract during that month, and shall be subject to all the provisions of the contract relating to the payment of current estimates. Should the work under any extra work order remain uncompleted during any month, payment thereupon shall not be made until the current estimate is paid for the month during which the work under said extra work order is completed. The Contractor shall not be entitled to any claim for interest on any bill for extra work on account of delay in its approval.

6. All extra work shall be considered a part of the Contractor's responsibility to perform any required extra work, or to make satisfactory progress in its execution, the Contractor shall not interfere with the prosecution of such work by the Owners.

7. During the progress of extra work the Contractor shall continue with any or all parts of the work under the contract, or shall suspend any part of the work that may be necessary or required; and no claim by the contractor for extra compensation shall thereby be allowed. The Contractor, however, shall be entitled to an extension of time, to the extent that the Director shall certify that the work under the contract has been delayed by the performance of said extra work, provided that a request for such extension shall be submitted within the time prescribed for requests of this nature.

L. OMITTED ITEMS

In accordance with Section 01000-4.0-I, should any items contained in the bid be found unnecessary for the proper completion of the work contracted, the Director may, upon written order to the Contractor, eliminate such items from the contract and such action shall in no way invalidate the contract, and no allowance in payment to the contractor will be made for items so eliminated in making final payment to the Contractor except for such actual work as may have been done, materials actually purchased, and actual equipment costs prior to notification of the elimination of these items. However, material purchased but not used shall become the property of Harford County, if payment is made under this subsection for such material.

M. UNAUTHORIZED WORK

1. Work done without lines and grades being given, work done without field stakeout and cut sheets, work done beyond the lines and grades shown on the plans or as given, except as herein provided, or any extra work done without written approval, will be considered as unauthorized and at the expense of the Contractor and will not be measured or paid for by the Owner. Work so done may be ordered removed and replaced at the Contractor's expense.

2. Borrow or any other materials shall not be obtained from areas adjacent to the work for incorporation therein without written approval by the Director, and in no event shall the removal of materials be such as to detract from the uniformity and neatness of the improvements.

3. All materials obtained contrary to the above restriction shall be considered unauthorized and shall not be measured or paid for, and further, upon order of the Director, in writing, all such materials shall be removed from within the limits of the work.

4. Where and when the Contractor requests and/or elects to perform work beyond the payment limits as specified, the Contractor will perform such work at his own expense.

N. RIGHTS IN AND USE OF MATERIALS FOUND ON THE WORK SITE

Except as provided in the preceding section, the Contractor, with the approval of the Director, may use in the proposed construction, suitable stone, gravel, top soil or sand found in the excavation, in accordance with Section 02250, but he shall replace at his own expense with other suitable material all of that portion of the material so removed and used as was contemplated for use in the embankment, backfills, approaches or otherwise. No charge for material so used will be made against the Contractor except the replacement herein provided for, which item when deductible shall be made from the respective item of excavation used for its replacement. The Contractor shall not excavate or remove any material from within the limits of work which is not within the excavation, as indicated by the slope and grade lines, without written authorization from the Director.

O. PIPE LINES TO BE KEPT CLEAN

During the progress of the work and until the completion and final acceptance thereof, pipe lines and their appurtenances shall be kept thoroughly clean throughout. Obstructions or deposits, at any time discovered, shall be removed at once by the Contractor without extra compensation. After the completion of the work, the pipe lines and their appurtenances shall be left clean, free and in good order.

P. CLEANING UP

1. The Contractor shall, at his own expense, keep the site of his operations clean during the construction and remove all rubbish as it accumulates.
2. On or before the completion of the work, the Contractor shall, without charge therefore, tear down and remove all temporary structures built by him, shall remove rubbish of any kind from any grounds which he has occupied, and shall restore site of the work, curbs, drains, gutters, sidewalks, roadways and other surfaces to a clean and neat condition.

Q. WATER SUPPLY

The Contractor shall provide, at his cost and expense, such quantities of clean water as may be required for any and all purposes under the Contract. He shall take particular care to furnish his employees with potable drinking water. All sources of water supply shall be subject to the approval of the Director, and shall be indicated to the Director by the Contractor five (5) days before beginning work, so that examinations of said supplies can be made.

R. SANITARY ARRANGEMENTS

Approved sanitary conveniences for the use of laborers and others employed on the work, properly secluded from public observation, shall be constructed and maintained by the Contractor, at his own cost and expense, in such manner and at such points as shall be approved or directed and their use shall be strictly enforced. The collections in the same shall be disinfected and removed when and as directed.

S. CARE AND PROTECTION OF WORK

From the commencement of the work until its completion and acceptance by the Owner, the Contractor shall be solely responsible for the care of the work, and all injury or damage to the same, from whatever cause, shall be repaired or replaced at the Contractor's expense, before the final estimate is made. The County reserves the right to direct the Contractor to repair or replace. He shall provide suitable means of protection for all materials intended to be used in the work in progress, as well as for completed work.

T. ROCK SHOWN ON DRAWINGS

1. Where rock is shown on the plans or in boring logs it has been so shown from the best information available and it is shown for the information of all parties concerned; however, the Owner assumes no responsibility for the accuracy of such information and should any Bidder or Contractor rely on such information in preparing his bid or in the performance of the work, he does so at his own risk.
2. Whether or not rock is shown on the plans, the Contractor is not relieved of the responsibility of making his own investigations to determine for himself if rock is present. Where the bid is at unit prices, the presence or absence of rock or the increase or decrease in quantities of rock shall not entitle the Contractor to additional compensation beyond the unit prices stipulated or bid for rock excavation.

5.0 CONTROL OF WORK AND MATERIALS

A. SUPERVISION AND DIRECTION OF WORK

1. The contractor shall supervise and direct the work efficiently using his best skill and attention. He shall be solely responsible for the techniques and sequences of construction. The work shall be prosecuted by the Contractor in such a manner, and with sufficient materials, equipment and labor, as is considered necessary to insure completion on or before the time specified.
2. The contractor shall keep a competent supervisory staff that is fluent in the English language, on the work site at all times during its progress that is acceptable to the Director. The superintendent shall not be changed except with the consent of the Director, unless the superintendent proves to be unsatisfactory to the Contractor and ceases to be his employee.
3. The Director shall not be responsible for the acts or omissions of the Contractor, or any subcontractor, or any of his or their superintendents, or employees.
4. The Contractor shall maintain a local telephone at which a competent representative can be reached at all times, 7 days a week, 24 hours a day. This authorized representative shall have the capability of responding with positive corrective action to emergency calls from local officials (Sheriff's Dept., State Police and Department of Public Works personnel) within 2 hours of the calls.

B. NOTICES TO SUPERINTENDENTS

All notices and instructions to the superintendent shall be given by the Director. Important instructions and notices shall be confirmed in writing to the Contractor.

C. CONSTRUCTION STAKE-OUT

1. Stake-out is defined as the installation of oak stakes in the ground with sledgehammer, identifying station, offset, cut, manhole number, valves, fittings, structures, roadways and other appurtenances. Stakes shall be at locations which will not be disturbed from construction activities. All reference shall match those shown on the construction drawings. All markings on stakes shall be with indelible marker.
2. Survey benchmarks are provided on the construction drawings with the corresponding coordinates and elevations. The construction drawings also provide location information of the proposed utilities. The Contractor shall utilize the benchmark information in conjunction with the proposed utility location information to perform a field stake-out to accurately construct the proposed facilities to the necessary lines, grades and elevations shown of the construction drawings. All field stake-out and re-stake-out must be performed by a Land Surveyor, registered in the State of Maryland. Any disturbed stakes shall be re-surveyed and located.
3. The party which performed the construction stakeout shall submit cut sheets to the County Inspector. The Contractor may not begin construction until the Inspector is in possession of the cut sheets. Cut sheets shall be signed and sealed by the registered Land Surveyor. Cut sheets shall indicate station number (with same reference as that shown on the construction drawings) of manholes, valves, fittings, structures or other appurtenances. At a minimum, the following information shall be shown on the cut sheet:
    a. Surveyors Name, Address, Phone Number
    b. Project Name and Contract Number
    c. Location with the Project that cut sheets pertains to (s.a.: type & size of utility and sheet number
    d. Pipe materials and stations ID, if material is measured
    e. Size/type of proposed utility
    f. Off-set hub distance from centerline
    g. Station
    h. Hub elevation of perpendicular offset
    i. Grade elevation (invert) of proposed utility
    j. Hub Cut (vertical) distance from off-set hub to pipe invert

k. Remarks column for indicating special conditions or other noted

4. On straight pipeline alignments, stake-out and cutsheets shall be provided at intervals not to exceed 50-feet. On curved pipeline alignments, the stake-out interval shall not exceed 25-feet. The cutsheets and stake-out shall also be provided for every manhole, valve, cleanout, water meter, curb stop, horizontal and vertical bend, continuity test stations, concrete encasement, sleeves and tunnels and other features, if requested by the County.

5. The Contractor shall preserve and maintain in proper position all stakes, grade-boards, and lines until authorized to remove them. In case any are disturbed, they shall be immediately re-set in accordance with the requirements in paragraph 1 above. Any portions of the proposed utility which are connected without the stakeout described above or with damaged or missing stakeout will not be approved and accepted.

D. INSPECTION

1. The Director will appoint such persons as he may deem necessary to inspect the materials furnished or to be furnished, and the work done under the Contract and to see that the same is proceeding in accordance with the Contract Documents. Materials and workmanship shall be always subject to the approval of the Director, but no inspection, approval or acceptance of any part of the work contracted for, or of the materials used or any payment on account thereof, shall prevent the rejection of said work or materials at any time thereafter during the existence of the contract, should said work or materials be subsequently found to be defective, or not in accordance with the requirements of the contract.

2. Work and material will be inspected promptly, but, if for any reason, delay should occur, the Contractor shall have thereby no claim for damages or extra compensation.

3. The Contractor shall furnish the Director with every reasonable facility for ascertaining whether or not the work performed and materials used are in accordance with the requirements and intent of the Specifications and Contract. If the Director requests it, the Contractor shall, at any time before acceptance of the work, remove or uncover such portions of the finished work as may be directed. After examination, the Contractor shall restore said portions of the work to the standard required by the Specifications. Should the work thus exposed or examined prove acceptable, the uncovering, or removing, and the replacing of the covering or making good of the parts removed shall be paid for as extra work, but should the work so exposed or examined prove unacceptable, the uncovering or removing, the replacing of the covering or making good of the parts removed, shall be at the Contractor's expense. No rework under this provision shall be done nor materials used without inspection by the Owner.

4. The Contractor shall pay for all inspection costs necessary to complete the work that are incurred by any other agency than the Owner or its duly authorized representatives, such as any railroad, or any public service utility company, or any governmental agency or any other agency whose

jurisdiction affects the work in any manner unless otherwise specified herein, or in the Contract.

5. For privately funded projects or developer projects, the Developer shall pay the cost of all inspection costs necessary to complete the work.

6. For County capital projects, the Contractor shall notify the Director in writing of his intended working hours and will obtain approval of the Director before revising these hours. The inspector will be paid for all work hours other than during normal County working hours. The billing rate will be noted in the contract documents or at a rate of one and a half (1 1/2) times the current inspection fee, and this payment will be subtracted from the monthly payment due the Contractor. The following times are to be considered hours other than normal working hours.

   a. Contractor work performed on Saturday and Sunday; and

   b. County Holidays; and

   c. Special No-work Days as designated by the County; and

   d. Hours of a Contractor's work day in which the work is excess of eight (8) hrs.

E. AUTHORITY AND DUTIES OF INSPECTORS

1. Inspectors shall be authorized to inspect all work done and all material furnished. Such inspection may extend to all or any part of the work and to the preparation, fabrication or manufacture of the materials to be used. The Inspector is not authorized to revoke, alter or waiver any requirements of the Contract, nor is he authorized to approve or accept any portion of the complete project. He is authorized to call the attention of the Contractor to any failure of the work or materials to conform to the Specifications and Contract. He shall have the authority to reject materials or suspend the work until any questions at issue can be referred to and decided by the Director. Inspectors shall perform their duties at such times and in such manner as will not unnecessarily impede progress under the contract.

2. The Inspector shall in no case act as foreman or perform other duties for the Contractor, nor interfere with the management of the work by the Contractor. Any advice which the Inspector may give the Contractor shall not be construed as binding the Director in any way, or releasing the Contractor from fulfilling all of the terms of the Contract, or complying with these regulations or other applicable laws.

3. Where there is disagreement between the Contractor (or his representative) and the Inspector, such as, refusal by the Contractor to use properly approved materials; for performing work not in compliance with Plans and Specifications; and/or refusing to suspend work until problems at issue can be referred to and decided by the Director, the Inspector will immediately notify the Director as to the issue of disagreement and if the Contractor still refuses to make corrections, comply or suspend work, the Director will prepare and deliver in writing to the Contractor, by mail or otherwise, a

written order suspending the work and explaining the reason for such shutdown. As soon as the Inspector is advised of the delivery of the shutdown order, the Inspector shall immediately leave the site of the work and any work performed during the Inspector's absence will not be accepted or paid for.

F. OFFICE SPACE FOR INSPECTOR

1. When required by the Director, the Contractor shall provide a suitable field office in an approved location in the immediate vicinity of the site for the exclusive use of the Resident Inspector. The office shall be a trailer or suitable building set up, equipped and made ready for use (including all utilities) prior to the beginning of work on the project and shall remain operative until all field records pertinent to the project have been completed. It shall be separated from any buildings used by the Contractor. The Contractor shall, within the price bid and without extra cost to the Owner, pay all costs of providing, operating and maintaining the field office including but not limited to charges for electrical and local telephone service (excluding long distance telephone calls), sanitary facilities, heating, fuel oil, etc.
2. The office shall be weather-tight, secured, heated or air conditioned as the season requires, adequately lighted by 110 volt 60 cycle electric lights, and as a minimum, have the following furnishings: desk, chair, plan rack, telephone, and file cabinet with an approved lock.

G. DEFECTIVE WORK AND DEFECTIVE MATERIALS

1. No inspection and no failure to inspect, nor the presence of any employees of the Owner during the execution of the work, and no approval or acceptance of any part of the work herein contracted for or of the materials and equipment used therein shall relieve the Contractor of any of his obligations to fulfill his Contract, or shall prevent the rejection of said work, materials and equipment, in whole or in part, at any time thereafter, should said work, materials and equipment be subsequently found by the Director to be defective or not in accordance with the requirements of the contract documents.
2. All materials not conforming to the requirements of the Contract Documents shall be considered as defective and all such materials, whether in place or not, shall be rejected and shall be removed immediately from the site of the work, unless otherwise permitted by the Director. No rejected material, the defects of which having been subsequently corrected, shall be used until approval has been given. Upon failure on the part of the Contractor to comply with any order of the Director made under the provisions of this article, the Director shall have authority to remove and replace defective materials and to deduct the cost of removal and replacement from any monies due the Contractor.
3. The Contractor shall furnish the Director with adequate documentation to show that the work performed and materials used are in accordance with the requirements and intent of the Contract Documents. At the request of the

Director, the Contractor shall, at any time before acceptance of the work, remove or uncover such portions of the finished work as may be directed. After examination, the Contractor shall restore said portions of the work to the standard required by the Contract Documents. Should the work thus exposed or examined prove acceptable, the uncovering, or removing, and the replacing of the covering or making good of the parts removed shall be paid for as extra work, but should the work so exposed or examined prove unacceptable to the Director, the uncovering or removing, the replacing of the covering or making good of the parts removed, shall be at the Contractor's expense. No rework under this provision shall be done nor materials used without inspection by the Owner.

H. FAILURE TO REMOVE AND RENEW DEFECTIVE MATERIALS AND WORK

1. Should the Contractor fail or refuse to remove and renew any defective materials used, or work performed previously, or to make any necessary repairs in an acceptable manner and in accordance with the requirements of these Specifications within the time indicated in writing, the Director shall have authority to cause the unacceptable or defective materials or work to be removed and renewed or such repairs to be made or defects corrected at the Contractor's expense.

2. Failure or refusal on the part of the Contractor to make any or all necessary repairs promptly, fully and in an acceptable manner, shall be sufficient cause for the Owner to declare the contract forfeited, in which case the Owner may purchase materials, tools and equipment, and employ labor, or may contract with any other individual, firm or corporation to perform the work. Any and all cost or expense incurred by the Owner in making these removals, renewals or repairs, which the Contractor has failed or refused to make, shall be charged against the defaulting Contractor and the amount thereof deducted from any monies due or which may become due him under the contract. Any work performed, as described in this paragraph, shall not relieve the Contractor of his responsibility for the work performed by him.

I. SUSPENSION OF WORK

The Owner may suspend the whole or any part of the work under the Contract, if in its judgment such action is necessary or advisable. Any claim for damages from such action shall be subject to the terms of the paragraph entitled "CLAIMS FOR DAMAGE" in Section 1000-6.0-E, GENERAL PROVISIONS. No allowances, however, will be made for minor interruptions to the work, from whatever cause.

J. INTERPRETATIONS BY DIRECTOR

1. The Director shall make all necessary interpretations as to the meaning and intent of the specifications and drawings, and shall give all advice and assistance as contemplated therein or thereby, or in every case in which a difficult or unforeseen condition arises during the prosecution of the work. Should there be any discrepancies in or between, or should any misunderstanding arise as to the import of anything contained in the

drawings and specifications, the interpretation of the Director shall be final and binding. Any errors or omissions on the drawings or in the specifications may be corrected by the Director when such corrections are necessary for the proper fulfillment of their intent.

2. The Director shall in all cases determine the amount, quality and acceptability of the work to be paid for under the contract, and shall decide all questions in relation to said work. His decision and estimate shall be final and conclusive, and in case any question shall arise between the parties touching the contract, such decision and estimate shall be a condition precedent to the right of the Contractor to receive payment under that part of the contract which is in dispute.

3. Interpretations will be rendered by the Director as promptly as possible but should delay occur for any reason, the Contractor shall have thereby no claim for damages or extra compensation.

K. ALTERATIONS OF PLANS OR OF CHARACTER OF WORK

1. The Director reserves the right to change the alignment, elevation, grade, form, length, dimensions or materials of the work under the contract, whenever any conditions or obstructions are met that render such changes desirable or necessary. All such alterations shall be paid for at a unit price bid for these items of work, except as follows:

   a. In case such alterations make the work less expensive to the Contractor, a proper deduction shall be made from the contract prices and the Contractor shall have no claim on this account for damages or for anticipated profits on the work that may be dispensed with.

   b. In case such alterations make the work more expensive, a proper addition shall be made to contract prices. Any such deduction or addition shall be subject to the approval of the Director.

2. Any changes and/or alteration to the approved contract documents shall be submitted and approved by the Director prior to beginning work on that item. Minor alterations may be noted on the as-built drawings if approved by the Director.

L. COORDINATION OF PLANS, SPECIFICATIONS AND SPECIAL PROVISIONS

These specifications, the accompanying Plans, Special Provisions and all supplementary documents are essential parts of the Contract. They are intended as to be mutually supplementary and to describe and provide for a complete work. In case of discrepancy, figure dimensions shall govern over scale dimensions. Plans shall govern over Specifications. Special Provisions shall govern over both Specifications and Plans.

M. COOPERATION OF CONTRACTOR REQUIRED

The Contractor will be supplied by the Director with five copies of the Plans and of the Specifications, and the Contractor shall have available at the site of work at all

times, during the prosecution of the work, one copy each of said plans and specifications. The Contractor shall give the work his constant attention to facilitate the progress thereof and shall cooperate with the Owner in every way possible. He shall at all times have a competent English-speaking representative on the work site, authorized to receive orders and act accordingly.

N. OTHER CONTRACTORS

1. The Contractor shall cooperate with and so conduct his operations as not to interfere with or injure the work of other contractors or workmen employed by the Owner. He shall promptly make good, at his own expense, any injury or damage which may be done by him or his employees or agents on the work.
2. The Contractor shall suspend such part of the work herein specified, or shall carry on the same in such manner as may be ordered by the Director, when necessary to facilitate the work of such other contractors or workmen.

O. SOURCE OF SUPPLY AND QUALITY OF MATERIALS

1. In conjunction with Section 1000-4.0-C the source of supply of each of the material shall be approved in writing by the Director before the delivery is started. Representative preliminary samples of the character and quantity prescribed shall be submitted by the Contractor or producer, said samples being taken under the observation of the Director, for examination, and tested in accordance with the methods referred to herein. Only materials conforming to the requirements of these specifications and approved by the Director shall be used in the work. No materials which, after approval, have in any way become unfit for use shall be used.
2. Unless a material has a satisfactory record of performance, the Director reserves the right to withhold approval of a new source of supply, even though it meets the specification requirements, until its qualities have been verified and proved in actual service.
3. Tests of all materials specified will be made in accordance with the latest official approved methods effective as of the date of Contract as described in the Special Provisions, on the Contract Drawings or in these Standard Specifications, for the specified material. When ASTM, AASHTO, ASA, AWWA, or Federal Specification standard specifications and serial numbers are stipulated, the reference shall be construed to be the latest effective specification. If material previously certified is subsequently declared substandard or unfit for the intended use by the certifying agency, the Director may declare the unused materials unsatisfactorily or unfit for use under the Contract.
4. The Contractor shall furnish every facility for the verification of all scales, measures and other devices which he operates.

P. STORAGE OF MATERIALS

1. Materials shall be stored so as to insure the preservation of their quality and fitness of the work.

2. The portion of the easement or right-of-way not required for public travel may be used for storage purposes and for the placing of the Contractor's plant and equipment, and any additional space required, unless otherwise stipulated, shall be provided by the Contractor at his expense.

3. Unless directed or noted otherwise in the Contract documents, there will be no payment for stored material.

Q. CONDITIONAL ACCEPTANCE (CAPITAL PROJECTS ONLY)

Whenever, in the course of performance of a Contract, the Contractor shall consider the work to have been properly completed and ready to be accepted by the County, the Contractor shall make a written application for conditional acceptance for the Contract, and payment based upon the Contractor's final estimate of the value of authorized work done under the terms of the Contract. The Contractor shall also certify to the County the completion of the work, the amount of his final estimate, and the total amount due to be paid the Contractor pursuant to the Contract. Prior monthly estimates are subject to correction in the Contractor's final estimate. Such application and final estimate shall be submitted to the Director for verification and approval prior to payment. Upon receipt of such application and the Contractor's final estimate, the County will make an inspection of the work. Upon completion of all repairs or replacements by the Contractor which may appear at that time in the judgment of the County to be necessary, the County will process the Contractor's final estimate for Conditional Estimate Payment.

If, at the conclusion of the conditional acceptance inspection requested by the Contractor as described above, additional tests, testing, and/or reinspection is required because of failures or defects due to improper or faulty construction, materials, and/or equipment furnished and/or installed by the Contractor, or for other reason(s) attributable to the Contractor's performance of work under the terms of this Contract, or because of lack of preparation for delivery of documentation required by this Contract as a condition to conditional acceptance, all costs of County personnel, equipment, utilities, and services associated with the reinspection(s) and/or retest(s) will be deducted from amounts retained or to be paid to the Contractor.

The date of this conditional acceptance certification will be the beginning of a one year guarantee period (unless noted otherwise), during which the Contractor shall at his own cost and expense, make all repairs and replacements which, in the judgment of the County, may become necessary during the guarantee period on account of any failures or defects due to improper construction or materials furnished by the Contractor. During the guarantee period, the Contractor shall return phone calls or respond, within 2 hours. If not, Harford County will perform emergency work and back charge the Contractor for the work performed. For non-emergency work, the Contractor shall respond within 2 days and perform the repair within 7 days. Should the Contractor fail to make needed repairs and replacements within the time frame noted above, the County shall be empowered to make any repairs or replacements and the cost of the required repairs or replacements shall be the financial responsibility of the Contractor. To insure the County against the

nonpayment of such costs, the County will either require the retainage of 10 percent of the total value of the Contract plus the value of work remaining at the time of Conditional Acceptance or require the Contractor to post an equivalent Maintenance Bond.

R. FINAL ACCEPTANCE

Upon expiration of the aforesaid guarantee period, the County will make a final inspection of the work under the Contract, and if at such inspection all construction provided for and contemplated by the Contract is found completed, such inspection shall constitute the final inspection and the County shall make the final acceptance as of that date and the Contractor shall be notified of such acceptance. After final acceptance, the County will assume responsibility for maintenance, repairs, and/or replacement except where otherwise provided by the Contract.

6.0 LEGAL RELATIONS AND RESPONSIBILITY TO THE PUBLIC

A. LAWS TO BE OBSERVED

The Contractor shall at all times observe and comply with all Federal, State an/or local law ordinances, rules and regulations in any manner affecting the conduct of the work, and all such orders or decrees as exist at present and those which may be enacted later, by bodies or tribunals that have jurisdiction or authority over the work, and shall indemnify and save harmless the Owner, its agents or servants against any claims or liability arising from or based on violations of any such law, ordinance, regulation, order or decree, whether by himself or by his employees.

B. CONTRACTOR'S AND SUBCONTRACTOR'S INSURANCE

1. Compensation and Employer's Liability Insurance

The Contractor shall procure and maintain during the life of the Contract statutory Workers' Compensation and Employer's Liability Insurance for all of his employees to be engaged in work on the project under the contract and, in case any such work is sublet, the Contractor shall require and the Subcontractor is similarly required to provide Workers' Compensation and Employer's Liability Insurance for all of the latter's employees to be engaged in such work in an amount of not less than One Million Dollars ($1,000,000.00).

2. Bodily Injury Liability and Property Damage Liability Insurance

The Contractor shall procure and maintain during the life of the contract Bodily Injury Liability and Property Damage Liability Insurance to protect him and any Subcontractor performing work covered by the contract from claims for damages for personal injury, including accidental death, as well as from any claims for property damage, which may arise from operations under the contract, whether such operations be by himself or by any Subcontractor or by anyone directly or indirectly employed by either of them, and the amount of such insurance should not be less than:

a. Bodily Injury Liability Insurance in an amount not less than One Million Dollars ($1,000,000.00) for injuries including wrongful death to any one person, and subject to the same limits for each person in an amount not less than One Million Dollars ($1,000,000.00) on account of one accident.

b. Property Damage Insurance in an amount not less than that specified to fully and completely insure said property.

c. Fire Insurance: The Contractor shall have adequate fire and standard extended coverage insurance with a company acceptable to the Owner that covers the project under Contract. The insurance shall provide protection at all times against loss by the Owner and Contractor until final acceptance of the work.

3. The Contractor shall file insurance certificates with the Owner prior to execution of the contract.

4. Written in the body of the certificate shall be:

a. "In the event of cancellation of the insurance, the Owner shall be given ten (10) days prior written NOTICE BY THE INSURANCE COMPANY".

b. "This certificate covers Contract(s) Number(s) _____; Name of job _____ (i.e.: “Joppa Area Water").

C. PATENT FEES, ROYALTIES AND LICENSES

Whenever any materials, process, composition or thing used in the work done or materials furnished, under the contract are covered by Letters Patent, the Contractor, before using or employing such material process, composition or thing, must secure the assent in writing of the Owner or licensee of such letters Patent and file same with the Director. In the event that the Contractor shall fail to obtain such prior consent, he and his surety Bond given for the faithful performance of his work under the Contract, shall be liable to the Owner for any and every claim, suit or demand brought against the Owner by reason of any default or neglect of the Contractor to obtain the assent in writing of such owners or licensees of such letter Patent.

D. PERMITS AND LICENSES

1. Such permits, licenses, insurance policies, etc., as may be necessary in order to comply with Federal, State or local laws in conducting the work, shall be provided by the Contractor/Developer at his own expenses, except as otherwise provided.

2. The Owner has or will obtain a permit for any work within the State, County or Municipal Rights-of-Way, Railroad Rights-of-Way, and the Contractor shall perform all work in accordance with the requirements of this permit and to the satisfaction of the Director. Copies of any permit obtained by the Owner will be included with the bid forms at the time of bidding.

E. CLAIMS FOR DAMAGES

1. If the Contractor shall claim compensation for any damage sustained by reason of the acts of the Owner, or any official or agent thereof, he shall within ten (10) days after sustaining such damage make a written statement to the Director of the nature of the damage sustained, and shall, on or before the fifteenth (15th) day of the month succeeding that in which he shall allege that such damage has been sustained, file with the Director an itemized statement of the details and amount of the details and amount of such damage.

2. Whenever it shall appear to the Contractor that, due to the exigencies of the work, he is about to incur damage, owing to the neglect or refusal of the Director to issue an extra-work order or to any other cause whatever, he shall at once notify the Director or his representative in writing, of such fact and state the nature of his possible claim, in order that the Director may obtain necessary and authentic information to guide future consideration and action on such claim and unless the Contractor shall comply with this requirement his claim for damage shall be fortified and invalidated. Such notifications shall not take the place of, but shall be in addition to, written statement herein above required to be submitted within ten (10) days after the occurrence of and alleged cause of damage.

3. In any case where the Contractor deems extra compensation is due him for work or materials not clearly covered in the contract, or not ordered by the Director as an extra, as defined herein, the Contractor shall notify the Director in writing of his claim for such extra compensation and receive the approval of the Director before he begins the work on which he bases the claim. If such notification is not given, or the Director is not afforded proper facilities by the Contractor for keeping strict account of actual cost, then the Contractor is deemed to have waived the claim for such extra compensation and or not have had a valid claim initially. In case the claim is found to be just, it shall be allowed and paid as an extra as provided for herein for extra work under Section 1000-4.0-K.

F. PUBLIC CONVENIENCE AND SAFETY

1. The Contractor at all times shall conduct the work in such a manner as to ensure the least obstruction to traffic practicable. The convenience and services of the general public and of the residents along and adjacent to the improvement shall be provided for in an adequate and satisfactory manner. Material stored along the improvement shall be placed so as to cause as little obstruction to the travelling public as is considered necessary. The Contractor shall, unless otherwise specified, provide and maintain in passable condition such temporary highways and bridges as may be necessary to accommodate the traffic diverted from the roadbed affected by the construction, and he shall provide and maintain in a safe condition temporary approaches to, and crossing of, intersecting highways. On highways occupied by a railway, vehicle access shall be provided and maintained by the Contractor in an approved manner. Fire hydrants on or

adjacent to the improvement shall be kept accessible at all times to fire fighting personnel and equipment.

2. In the performance of their work, all contractors shall comply with all applicable Local, State, and Federal safety and health laws and regulations.

G. USE OF EXPLOSIVES

1. The use of explosives will not be permitted unless authorized in writing by the Director. When use of explosives is permitted, the Contractor shall use the utmost care so as not to endanger life or property; and whenever necessary the number of charges and size of the charge shall be reduced. The Contractor's attention is directed to the necessity of safeguarding the public during dynamiting operations, and a sufficient number of watchmen, flagmen, signs, etc. shall be used to warn motorists during periods of blasting. All explosives shall be stored in a secure manner, and all such storage places shall be marked clearly, "Dangerous Explosives" and shall be in care of competent watchmen at all times. Explosives shall be stored and handled in conformity with provisions of the statutes of the State of Maryland and local laws and ordinances.

2. The Contractor shall fully inspect the interior and exterior of foundations, and homes prior to and after blasting operations. In each case, the Contractor shall report the findings, with photo documentation, to the County within two working days. The Contractor shall be responsible to install seismographs at locations to document the forces resulting from blasting.

3. The Contractor shall notify each property owner/resident and public utility company having structures in proximity to the site of the work of his intention to use explosives, and such notice shall be given sufficiently in advance to enable the property owners/residents and companies to take steps as they may deem necessary to protect their property from injury. Such notice shall not relieve the Contractor of any responsibility for damages which may occur as a result of his operations.

4. Expert powder men licensed by the State Fire Marshal shall be employed by the Contractor for handling and use of explosives, and all their work shall conform to these requirements.

5. The Contractor shall notify the Harford County Fire Marshal's Office of his intention to use explosives, at least 48 hours in advance so the Fire Marshal's office can schedule their operations.

6. The authorization by the Director for use of explosives shall not relieve the Contractor of his full responsibility for damages which may occur or for obtaining all necessary permits.

7. The Contractor must file a copy of the blasting permit with the Director prior to the use of any explosives. The cost of the blasting permit shall be borne by the Contractor.

H. MAINTENANCE OF TRAFFIC

Unless otherwise noted in the Special Provisions, it shall be the responsibility of the

Contractor to maintain highway and pedestrian traffic safely, adequately, and continuously on all portions of the project. Traffic control shall be in accordance with the Harford County or Maryland State Highway Administration approved traffic control plan. Where it has previously been established that traffic cannot be maintained, specific information relative to the use of detour routes and working restriction, if any, will be included in the Contract Documents. If, during the conduct of the work, conditions are such that traffic cannot be maintained and other routes are available, the Contractor may with the approval of the Director request that the Division of Engineering and Transportation establish a detour route.

The Contractor shall, at his own cost and expense, furnish all watchmen, detour signs, road closure signs, and barricades in accordance with the approved traffic control plans and erect them at locations designated by the Director prior to the initiation of any work.

The cost of maintaining traffic as noted above shall be considered as incidental to other items and included in the price bid for them except when a special item for "Maintenance of Traffic" is provided in the Bid Form.

I. PRESERVATION AND RESTORATION OF PROPERTY, TREES, MONUMENTS, ETC.

The Contractor shall not enter upon private property for any purpose without obtaining permission, and shall be responsible for the preservation of all public and private property, trees, monuments, etc., along and adjacent to the work and shall use every precaution necessary to prevent damage or injury thereto. He shall use adequate precautions to prevent damage to tracks or pipes, conduits and other underground structures, and shall protect carefully from disturbance or damage all land monuments and property marks until an authorized agent has witnessed or otherwise referenced their location and shall not remove them until directed, and replacement of same shall be borne by the Contractor. The Contractor shall not willfully or maliciously injure or destroy trees or shrubs and he shall not remove or cut them without proper authority. He shall be responsible for all damage or injury to property of any character, during the prosecution of the work, resulting from any act, omission or misconduct in his manner or method of executing said work or due to the non-execution thereof on the part of the Contractor; he shall restore, at his own expense, such property to a condition at least equal to that existing before such damage or injury was done, by repairing, rebuilding or otherwise restoring, as may be directed, or he shall make good such damage or injury, in an acceptable manner. In case of the failure on the part of the Contractor to restore such property, or make good such damage or injury, the Director may, upon forty-eight (48) hours notice, proceed to repair, rebuild or otherwise restore such property as may be deemed necessary, and the cost thereof will be deducted from the monies due or which may become due the Contractor under his contract. Mail service shall be maintained at all times.

J. REQUIREMENTS OF THE MARYLAND DEPARTMENT OF STATE FORESTS AND PARKS

1. In conjunction with Section 1000-4.0-H 1-D-8, the attention of the Contractor is called to the fact that he will be required to protect and save from harm those trees which have been designated on the Contract drawings.
2. It will be required that the Engineer secure a permit from the Maryland Department of State Forest and Parks, which will be made part of the Bid Documents.
3. The Contractor must assume all expenses incurred by inspection and supervision service required by the Maryland Department of State Forest and Parks, and it is, therefore, necessary for the Contractor to contact the Maryland Department of State Forest and Parks' local District Office for further information.

K. INDEMNIFICATION OF THE OWNER

1. The Contractor shall indemnify and save harmless (including, but not limited to, compensation of attorney fees) the Owner and its officers, agents, and employees from all suits, actions, or claims of any character, name and description brought for or on behalf of persons or property due to any neglect in safeguarding the work, the use of unacceptable or defective material in the construction of the work, or on account of any act or omission, neglect, or misconduct of the Contractor, its agents, employees, or subcontractors.
2. The Owner may retain as much of the monies due the Contractor as shall be considered necessary by the Owner to assure settlement of said suits, actions or claims. In case no monies are due, the Contractor’s bond shall be held until all suits, actions, or claims thereon have been settled and suitable evidence to that effect furnished to the Owner.

L. NO WAIVER OF LEGAL RIGHTS

The Owner shall not be precluded or stopped by any measurement, estimate, or certificate made either before or after the completion and acceptance of the work and payment therefore, from showing the true amount and character of the work performed and materials furnished by the Contractor, from showing that any such measurement, estimate, or certificate is untrue or is incorrectly made, nor from showing that the work or material does not in fact conform to the Contract. The Owner shall not be precluded or stopped, notwithstanding any such measurement, estimate, or certificate, any payment in accordance therewith, from recovering from the Contractor or its sureties, or both, such damage as it may sustain by reason of its failure to comply with the terms of the Contract. Neither the acceptance by the Owner or any representative of the Owner, nor any payment for the whole or any part of the work, nor any extension of time, nor any possession taken by the Owner, shall operate as a waiver or any portion of the Contract or of any power herein reserved, or any right to damages.

The waiver of any breach of the Contract shall not be held to be a waiver of any

other or subsequent breach.

M. WAIVER OF CONTRACT

Neither the acceptance of the whole or any part of the work by the Director nor any order by the Owner for the payment of money, nor any payment by the Owner for the whole or any part of the work, nor any extension of time, nor any possession taken by the Owner or its employees, shall operate as a waiver or any portion of the Contract or of any power therein reserved to the Owner, or any right to damage therein provided, nor shall any waiver of any breach of the Contract be held to be a waiver of any other or subsequent breach.

N. PREQUALIFICATION REQUIREMENTS

All Contractors constructing, replacing, modifying or altering water and sewer facilities under the jurisdiction of Harford County, must be pre-qualified under Category D-1 (Sewer Mains) and/or Category D-2 (Water Mains) and/or Category M (Pump Stations) in accordance with the Harford County Department of Procurement pre-qualification procedures. For Developer projects, pre-qualification shall occur prior to the pre-construction meeting.

O. SANITARY SEWAGE OVERFLOW PREVENTION

1. **Sewage overflows are strictly prohibited**. The Contractor shall take every reasonable precaution to prevent overflows and spills during construction, startup and testing of projects.
2. Prior to construction, if applicable, the Contractor shall submit a plan of action to the County for review and approval that addresses the handling of existing wastewater flows. It is essential to the operation of the existing sewage system that there is no interruption in the flow of sewage throughout the duration of the project. The Contractor shall provide, maintain and operate all temporary facilities such as plugs, pipe, pumping equipment (both primary and back-up units), all necessary power, and all other labor and equipment necessary to maintain sewage flow around the work area in a manner that will not cause damage to sewers and that will protect public and private property from damage and flooding.
3. In the event of an emergency or special hazard (i.e., sewage spills, sewage overflows, unsafe working conditions, release of toxic chemicals, and other emergencies and hazards) that may occur during the performance of the work under the contract and/or that is the result of the Contractor's operations, the Contractor shall take immediate and appropriate action to halt the spillage or release and clean and disinfect the area to the satisfaction of the County. The Contractor shall immediately notify Harford County's Division of Water & Sewer at 410-612-1612. All project work shall cease until this notification has been made and the appropriate corrective actions have been taken.
4. The Contractor shall be solely responsible for all fines, clean-up costs, public notifications, posting of signs, bacterial sampling and testing, written reports,

and five year record retention resulting from emergencies and hazards that are the result of Contractor operations.

5. Any regulatory agency fines that are levied against Harford County as a result of the Contractor's actions or negligence shall be paid by the Contractor.

7.0 PROSECUTION AND PROGRESS

A. TIME OF BEGINNING AND COMPLETION

1. The Contractor shall accept a Contract with the understanding and intention to perform fully, entirely and in an acceptable manner the work contracted for within the Contract time stipulated in the Bid, accounting from the date provided in the Notice to Proceed. Time is of the essence in all Contracts.
2. The Contractor shall attend and participate in a Pre-Construction Meeting at a time and place indicated by the Owner. The Contractor's Superintendent must attend such meeting, as well as any other key personnel from the Contractor's work force deemed necessary by the Owner.
3. In connection with the improvement, the right is reserved to award any work not included in the Contract to another Contractor for performance during the progress of the Contract, or to perform such work by Owner's forces, and the Contractor for this Contract shall cooperate and so conduct his operations as to minimize the interference therewith.
4. When the Contract time is on a calendar day basis, it shall consist of the number of consecutive calendar days stated in the Contract, including all Sundays, holidays, and non-work days, but excluding all calendar days elapsing between the effective dates of any orders of the Director to suspend and resume operations. If, however, the prosecution of the work shall be delayed or suspended in consequence of the Contractor's inability to obtain the necessary materials, or in consequence of any act or omission of the County and not by any fault of the Contractor, then the time for completion of the work shall be increased by a period of time equal to the aggregate time expressed in calendar days, and parts of days, during which the prosecution of the work has been so delayed or suspended.
5. No allowance shall be made for delay or suspension of the prosecution of the work due to the fault of the Contractor. The Contractor, under certain conditions, may be ordered or after written application to the Director, be granted permission, in writing to suspend operations in whole or in part. During such periods if, the Contractor elects, and is permitted in writing, by the Director, to do any work, the time charged shall bear the same ratio to the total time allowed for completion of the work as the value of work performed bears to the total value of the Contract. Work of an emergency nature ordered by the Director for the convenience of the traveling public or for the production or delivery of materials for storage, if performed during such periods of suspension, shall not be charged to the Contract time.

6. Following the date on which all work has been completed except those landscaping items on which work is restricted to specified seasons and when final inspection and acceptance is being deferred pending completion of those landscaping items on which work is not permissible at the time because such work is currently out of season, and for no other reason, no time shall be charged against the Contractor until such time as it is again permissible to proceed with such work. However, time shall be charged during any extensions of the specified season which may be granted the Contractor.

7. If the satisfactory execution and completion of the Contract, as awarded and exclusive of extra work thereafter authorized, shall require work or material in greater amounts or quantities than those set forth in the Contract, then the number of days allowed for completion shall be increased in the same proportion as the additional work bears to the original work contracted for, figured at the Contract prices.

8. The Director shall compile a statement showing the date the Contractor was required to complete all the work, in accordance with all the terms and provisions of the Contract, as compared with the time actually consumed by the Contractor in so completing said work, and also showing the recommendations of the Director as to the number of days, if any, for which the Contractor shall pay liquidated damages.

9. The above statement, after being compiled by the Director, shall be certified by him and forwarded with his recommendations to the Director of Procurement.

B. SUB-LETTING AND ASSIGNMENT

1. The Contractor shall give his personal attention constantly to the faithful performance of the work, shall keep the same under his own control, and shall not assign the Contract by power of attorney or otherwise, nor sublet the work or any part thereof, without the previous written consent of the Director. He shall state to the Director, in writing, the name of each subcontractor he intends to employ, the portion of the work which he is to do, or the materials which he is to furnish, his place of business and such other information as the Director may require in order to know whether such subcontractors are reputable and reliable, and able to perform the work or to furnish the materials as called for in the Specifications. A subcontractor may not sublet work assigned to him.

2. The Contractor shall perform with his own organization work amounting to not less than 50 percent of the remainder obtained by subtracting from the total original Contract value the sum of any items designated in the Contract Special Provisions as "Specialty Items." Only complete items may be sublet.

3. The Contractor shall not, either legally or equitably, assign any of the moneys payable under the Contract, or his claims thereto, unless by and with the like consent of the Director.

4. The Contractor shall not be released from any of his liabilities or obligations under his Contract should any subcontractors fail to perform in a satisfactory

manner the work undertaken by him or them.

5. The Contractor shall be as fully responsible to the County for the acts and omissions of his subcontractors, and of persons either directly or indirectly employed by them, as he is for the acts and omissions of persons directly employed by him.

6. Nothing contained in the Contract Documents shall create any contractual relation between any subcontractor and the County.

C. WORKMANSHIP

All work shall be performed and all materials furnished in carrying out the Contract shall be of the character and quality required by the Contract documents. Where no standard is specified for such work or materials, they shall be the best of their respective kinds. Any unsatisfactory work done or materials furnished, at whatever time they may be discovered, shall be immediately removed and satisfactorily replaced by the Contractor, when notified to do so by the Director. If the Contractor shall neglect or refuse to remove such unsatisfactory work or material within forty-eight (48) hours after the receipt of the above mentioned notice, or if he shall not make satisfactory progress in doing so, the Director may cause said work or material to be removed and satisfactorily replaced, by contract, or otherwise, and the expense thereof shall be charged to the Contractor. Such expense shall be deducted from any moneys due or to become due the Contractor under the Contract. Upon the completion of the Contract, the entire work shall be delivered to the Owner in a condition equal to or better than the industry standard, complete, and in a satisfactory working condition.

D. COMPETENCE OF LABOR

Only competent labor shall be used. Any employee of the Contractor who shall use profane or abusive language to the Inspector or other employees of the Owner, or is otherwise disorderly and interferes with him in the performance of his duties, or who is careless and incompetent, shall be discharged on the request of the Director and shall not again be employed on the Contract Job except with the Director's consent.

E. ABANDONMENT OF OR DELAY IN WORK

If the work under the Contract shall be abandoned by the Contractor, or if at any time the Director shall be of the opinion, and shall so certify in writing to the Owner, that the performance of the Contract is unnecessarily or unreasonably delayed, or that the Contractor is violating any of the provisions of the Contract or is executing the same in bad faith, or if the work be not fully completed within the time named for its completion, together with such extension of time as may have been granted, the Owner, by written notice, may order the Contractor to discontinue all work thereunder, or any part thereof; and thereupon the Contractor shall discontinue the work, or such part thereof, and the Owner shall have the power, by contract, or otherwise, to complete said work and deduct the entire cost thereof from any moneys due or to become due the Contractor under the Contract. For such completion of the work, the Owner may for itself or its contractors, take possession

of and use or cause to be used any or all materials, tools, machinery and appliances found on the line of said work. When any part of the Contract is being carried on by the Owner as herein provided, the Contractor shall continue the remainder of the work in conformity with the terms of the Contract, and in such manner as not to interfere with the workmen employed by the Owner.

F. DEFAULT OR FAILURE TO COMPLETE WORK ON TIME

Should the Contractor fail to fully complete the work in accordance with the Contract Documents and within the time specified, the Director shall determine the number of days that the Contractor is in default in completing the work under the Contract and shall certify the same in writing. For each day so certified, the Contractor shall pay to the Owner the sum stipulated in the Bid and the Contract for each and every day thereafter, until and including the day when the said work shall be completed to all intent and purposes, as set forth in the Bid under the Contract and the specifications, in an acceptable manner and to the satisfaction of the Director, which sum is agreed upon, not as a penalty, but as liquidated damages which the Owner shall suffer by reason of such default: However, the Owner may, as hereinafter provided, extend the time for the completion of the work authorized and is empowered to deduct and retain the amount of any damages determined, as hereinbefore provided for, each day that the Contractor shall be in default in completing the work after the time fixed under the Contract, or for any later date to which the time of completion may have been extended, from any moneys due or to become due the Contractor under the Contract, at any time after such damages are so incurred, provided, however, that the Owner may extend the time for the completion of the work beyond the Contract time. The permitting of the Contractor to finish the work after the time fixed for its completion or after the date to which the time fixed for its completion or after the date to which the time for completion may have been extended, shall not in any way operate as a waiver on the part of the Owners or any of their rights under the Contract.

8.0 MEASUREMENT AND PAYMENT

A. GENERAL

1. Lump Sum Contracts - Lump sum payment shall include clearing and grubbing, removal and replacement of existing sidewalks, shrubbery, driveways, poles, mail boxes, signs, fences, or any other existing objects which are required to be restored to complete the work, and all new work such as trench excavation and backfill, sheeting and shoring, dewatering, furnishing and laying pipe, furnishing of materials and construction of manholes, vaults, headwalls, bends wye branches, and any other structures incidental to the work, and all other operations and materials required to complete the work. Lump sum contracts shall include, for the bid price, all costs of materials and services for which the Contractor shall be paid under the Contract, plus profit. No further or additional compensation is due and owing the Contractor except as the Contract may be modified to provide for.

2. Unit Price Contracts

a. Unit prices where directed shall be paid for by measurements of all quantities of work and material by the Director according to the specifications and drawings and the working-lines that may be given. No allowance will be made for any excess above the quantities required by the specifications, drawings and lines on any part of the work, except where such excess material has been supplied or work done by written order of the Director and in the absence of default or negligence on the part of the Contractor. Should the dimensions of any part of the work or of the materials be less than those required by the drawings or the directions of the Director, only the actual quantities placed will be allowed in the measurements. The County reserves the right to withhold payment of particular items or portions thereof until the item(s) in question has proven conformance by the Director's inspection and satisfactorily passing the applicable testing requirements stipulated in the Contract documents.

b. When a mobilization item has been established in the bid it shall consist of the furnishing of all work, materials, and operations required for the assembling and setting up for the project, including, but not limited, to the following:

i. Initial movement of personnel to the project site.
ii. Establishment of the Contractor's office.
iii. Establishment of the Engineer's field office.
iv. Establishment of shops and plants.
v. Construction of sanitary and other facilities required by the Specifications and state or local regulations.
vi. Clearing and grubbing, moving on and offsite all construction, hauling units, concrete mixers, hoisting equipment, compressors, and tools required to complete the work.
vii. Establishment of storage area.

Mobilization shall also include all other work and operations which must be performed prior to beginning work on compensable items of work at the project site.

The cost of required insurance and bonds and/or any other initial expense required for the start of work shall be included in this item.

Payment will be made at 50 percent of the lump sum price bid for "MOBILIZATION" of the Bid payable on the first monthly estimate subsequent to the Contractor's moving in all facilities required as indicated in the foregoing. The remaining 50 percent will be paid in equal monthly payments based on the specified construction term, during the progress of the contract. Payment as directed will be full compensation for all labor, materials, equipment, tools, and incidentals required to complete this item, regardless of the fact that the Contractor may have, for any reason, shut down the work on the project and moved equipment away from the project and then back again.

Where unit price contracts are directed, following the completion of the work and before final payment is made therefore the Director shall make final measurements to determine the quantities of various items of work performed as the basis for final settlement. The Contractor, in case of unit price items, will be paid for the actual amount of work performed and for the actual amount of materials in place, in accordance with these specifications as shown by the final measurements. All work contemplated under the Contract shall be measured by the Director according to the standards of weight and measures recognized by the National Bureau of Standards.

Measurements of items paid for on the basis of linear or surface area shall be along and parallel to the actual lines and surfaces on the roadway surfacing having an area of nine (9) square feet or less. In computing volumes, the method of average end areas will be used for excavation, embankments and removal of existing masonry. The pay weight for all items to be paid for by weight, certified shipping weight or by computed weight as hereinafter specified and no allowance for overrun, other than designated herein, shall be made.

Materials specified for measurement by tallying of vehicles having pre-determined carrying capacity shall be hauled only in approved units, struck off at the top of the carrying unit or to permanent lines at the loading point and tallied at the point of delivery. Unless all vehicles have uniform carrying capacity, each hauling unit shall be marked identifying the approved capacity.

In the volumetric measurements of the "Tamped Fill" over pipe, "Masonry" and "Stone Backfill" around pipe, deduction shall be made for the volume occupied by the pipe.

In the measurement of pipe whenever special fittings are used, for which a separate item price is set up, the accumulative linear measurement occupied by these fittings shall be deducted from the total linear measurement of pipe placed.

B. MONTHLY ESTIMATES

1. The Contractor shall, submit in writing on a date specified by the Director, and on forms provided by the Department of Public Works, an estimate, such as he shall believe to be just and fair, of the amount of work done under each item of the contract during the estimate period. Such estimate shall not be required to be made by strict measurements, but may be approximate only, and shall be subject to correction in later estimates. Monthly estimates shall not contain any allowance for materials delivered upon the site of the work but not incorporated therein, and the Contractor shall not be entitled to receive any payment therefore, except where specifically permitted by the Director. The estimate shall be submitted to the Director for confirmation that the work for which payment is claimed has

been performed.

2. Upon the Owner's approval of each monthly estimate, the Owner will retain a portion of the amount due the Contractor, in accordance with the following:

   a. Withholding of 10 percent (10%) of the payment claimed for projects $200,000 or less for the entirety of the project;

   b. For projects over $200,000:

      i. Withholding of 10 percent (10%) of the payment claimed until Work is 50 percent (50%) complete;
      ii. When the work is 50 percent (50%) complete, and at the sole discretion of the Director, the withholding may be stopped or lowered to a lower percentage of the payment claimed for all remaining work satisfactorily completed to date, provided that the Contractor is making satisfactory progress and there is no specific cause for greater withholding.
      iii. The County may reinstate up to 10 percent (10%) withholding of the total payment for the work completed to date, if the Contractor is not making satisfactory progress or there is other specific cause for such withholding.
      iv. The County may accept securities negotiable without recourse, condition or restrictions; a release of retainage bond; or an irrevocable letter of credit provided by the Contractor, instead of all or part of the cash retainage.
      v. In no case shall the withheld amount be less than 5 percent (5%) of the dollar value of the Work completed to date.

   Director may retain out of such payment any or all sums which, by the terms of these specifications, the Contract, or of any law of the State of Maryland in force at the date of the signing of the Contract, it is authorized to retain. Payments on monthly estimates may be withheld if, in the judgment of the Director, the Contractor is not complying with the terms of the Contract.

3. In the instance of lump sum items, the Director shall estimate the percentage of the lump sum item satisfactorily performed during the preceding month. The percentage of the lump sum items shall be computed from the approved Contractor's breakdown.

C. FINAL ESTIMATE

1. Upon completion of the work, the Contractor shall make a written final estimate, based upon the Director's measurement of the whole amount of authorized work done by the Contractor, and the value thereof under the terms of the Contract, and shall certify to the Owner the completion of the work and the amount of the final estimate. The Director's measurements, upon which the final estimate is based, shall be final and conclusive. The estimate shall be submitted to the Director for confirmation that the work for which payment is claimed has been performed. Following his review the Director will submit the estimate for payment.

2. Upon approval of the final estimate, the Owner will notify the Contractor, in writing, of the conditional acceptance of the work. Out of the amount representing the total of the final estimate, the Owner will deduct ten (10) percent, which shall be in addition to any and all other amounts which under the Contract is entitled or required to retain, and shall hold said sum for a period of twelve (12) months from and after the date of payment of the final estimate, as herein below stipulated. Such part as may be necessary, or all, of said retained sum shall be applied to any expense to which the Owner may be subjected, during the said period of twelve (12) months, in repairing any defects found in the work under the Contract which may be deemed to have been caused by failure of the Contractor to comply with the terms of the Contract, or to any breach of the Contract whatsoever on the part of the Contractor. The Owner shall be empowered to make any required repairs or renewals during said period, without notice to the Contractor, if they shall judge such action to be necessary, or if, after notice, the Contractor shall refuse or neglect to do said required work or make satisfactory progress thereon within such period as the Director shall consider necessary or reasonable. Where such emergency repairs have been made without prior notice to the Contractor, he shall be so advised as soon as possible thereafter. The right of expenditure of any retainage as provided for above shall be in addition to the Owner's right to proceed against any and all bonds posted or security by the Contractor.

3. Within fifteen (15) days after the approval of the final estimate, the Owner will pay to the Contractor the amount remaining after deducting from the total amount of the final estimate all such sums as have heretofore been paid to the Contractor under the provisions of the Contract, and also such amounts as the Owner has or may be authorized by these specifications or under the Contract to reserve or retain.

D. FINAL ACCEPTANCE AND PAYMENT

Prior to expiration of the aforesaid period of twelve (12) months succeeding the payment of the conditional acceptance the Owner will pay the Contractor all sums reserved or retained, less such amounts as it may be empowered under the provision of the Contract permanently to retain.

E. EVIDENCE OF PAYMENT

The Contractor shall furnish the Owner with a release of liens within ten (10) days after the final completion and acceptance of the whole work under the Contract from each person, partnership and corporation who has done work or furnished materials under the Contract, or in or about the work contracted for. In the event a release of lien is not furnished by the Contractor, the Director may withhold an amount from monies retained or due to the Contractor under the Contract as it deems necessary to cover the cost of materials or labor provided until a release of lien is received by the Director.

F. MAINTENANCE BOND

At any time after the approval of the final estimate the Contractor may be permitted to furnish a Maintenance Bond in favor of the Owner in the amount which would otherwise be retained by the Owner. Such bond shall be in a form and with a surety approved by the Owner, binding the Contractor as principal and the surety to promptly and properly replace any improper work or materials that may become apparent within a period of twelve (12) months following the conditional acceptance of the work. Upon acceptance by the Owner of such a bond, the sum retained by the Owner will be paid to the Contractor.

G. TERMINATION OF THE OWNER'S LIABILITY

The acceptance by the Contractor of the final payment made as aforesaid shall operate as and be a release to the Owner and every officer and agent thereof, for all claims by and liabilities to the Contractor and/or any other person, corporation or association for anything done or furnished for or relating to or affecting or affected by the work under the Contract.

STANDARD SPECIFICATION

Issued: 3/15/09

STANDARD SPECIFICATIONS
TABLE OF CONTENTS

No of Pages

Division 2 - Site Work
- Section 02012 - Test Pits 4
- Section 02050 - Removal or Abandonment of Existing Utilities 6
- Section 02110 - Clearing and Grubbing 4
- Section 02240 - Aggregate Backfill 4
- Section 02250 - Trench Excavation, Backfill and Compaction 12
- Section 02300 - Boring and/or Jacking Pipe 6
- Section 02310 - Directional Boring or Pressure Sewer 6
- Section 02400 - Tunneling 12
- Section 02660 - Water Mains 16
- Section 02662 - Water Valves and Appurtenances 6
- Section 02664 - Water Services and Appurtenances 8
- Section 02666 - Fire Hydrants 6
- Section 02700 - Gravity Sanitary Sewer and House Connections 14
- Section 02710 - Sanitary Sewer Manholes 8
- Section 02720 - Sanitary Sewer Force Mains 6
- Section 02731 - Low Pressure Sewer 8
- Section 02800 - Restoration 4
- Section 02820 - Turf Establishment 12
- Section 02830 - Sodding 4
- Section 02850 - Soil Stabilization Matting 4
- Section 02860 - Tree Protection 4
- Section 02865 - Trees and Shrubs 8
- Section 02870 - Fences 8

Division 3 - Concrete
- Section 03200 - Concrete Reinforcement 4
- Section 03300 - Cast In Place Concrete 20
- Section 03400 - Precast Concrete Utility Structures 6
- Section 03500 - DELETED .....

Division 4 - Masonry
- Section 04100 - Mortar 4
- Section 04200 - Brick Masonry 6

Division 5 - Metals
- Section 05500 - Miscellaneous Metals 6

Division 6 – NOT USED

Division 7 - NOT USED

Division 8 - NOT USED

Division 9 - NOT USED

Division 10 - NOT USED

Division 11 - Equipment
- Section 11307 - Sewage Grinder Pumping Units 14

SECTION 02012
TEST PITS

1.0 GENERAL

A. Description

1. Prior to construction it shall be the Contractor's responsibility to establish the location and/or elevation of existing utilities and structures that may affect the proposed work. The Contractor shall test pit all mainline utilities as required to perform the work (including but not limited to water mains, gas mains, electric, telecommunication and others which may conflict with the construction) prior to the excavation of the proposed utility and submit copies of the results to the Director within 1 working day. The Contractor shall immediately notify the Engineer if the horizontal or vertical location of the test-pitted utility will conflict with the proposed construction. The proposed construction may not occur until the Engineer has revised the construction drawings and the revised construction drawings have been approved by the County.

2. Test pits shall include, but not necessarily be limited to, excavation to determine the exact horizontal location and/or elevation of underground structures, utilities, and other obstructions; the backfill and compaction of the excavation; and the stabilization of the surface, in accordance with the Contract Documents.

B. Related Work Included Elsewhere

1. Trench Excavation, Backfill, and Compaction: Section 02250

2. Restoration: Section 02800

C. Quality Assurance

It is intended that all suitable materials removed from the test pit excavation, exclusive of paving materials, be used for backfill. The County has the right to inspect all material used as backfill to determine the material's suitability for use as backfill.

2.0 MATERIALS

A. Materials Furnished by the County

None

B. Contractor's Options

1. Use of Excavated Material

All suitable material excavated from test pits shall be used, as far as practicable, for backfill. The Contractor shall properly store or stockpile and protect all materials that are to be reused in the work. The Contractor shall replace, at his own expense, material that was suitable when excavated, which has subsequently become unsuitable because of careless, neglectful, wasteful, or unprotected storage. The Contractor shall have no property right in any material taken from any excavation and no excavated material shall be wasted or otherwise removed from the project site without permission of the County. All unsuitable material shall be removed from the excavation and disposed of off-site in accordance with local, state and federal regulations by and at the expense of the Contractor.

2. Borrow

Borrow material for test pit backfill shall meet the requirements of Section 02250.

3. Graded Aggregate Subbase

Graded aggregate subbase for test pit backfill shall meet the gradation requirements specified in Section 02240.

3.0 EXECUTION

A. General

It shall be the Contractor's responsibility to determine the location and/or elevation of underground structures and utilities by the use of test pit excavation prior to initiating excavation operations for the installation of the proposed facility. Test pits shall be of the size, depth and location as approved by the County. Should the location and/or elevation thus determined be different from that shown on the Plans, the Contractor shall promptly furnish the correct information to the County so that the impact on the project may be determined.

B. Test Pits

1. The Contractor shall provide all necessary traffic control in accordance with the applicable regulations.

2. Surface preparation, excavation, backfill, compaction, and maintenance of the backfilled excavation shall be as specified in Section 02250 for trenches, except that the limits of the work shall be as approved by the County.

3. Restoration shall be as specified in Section 02800 unless otherwise specified or directed by the County.

4.0 METHOD OF MEASUREMENT

Unless otherwise shown on the drawings, identified by “Miss Utility”, or specified in the Contract Documents, test pits will not be measured but shall be incidental to the proposed utility work. If directed by the Owner, measurement for test pits will be made on the basis of the volume of material actually removed from within the limits specified by the County.

5.0 BASIS OF PAYMENT

Payment for test pit excavation performed to establish the location of existing utilities shown on the Plans shall not be paid as it is considered incidental to the proposed work.

If directed by the Owner, payment for test pits will be made at contingent prices established in the bid proposal. The price bid shall include furnishing all labor, material, equipment, and incidentals necessary to perform the traffic control, excavation, backfill, compaction and surface restoration or pavement patch for the test pit.

This page has been intentionally left blank.

SECTION 02050
REMOVAL OR ABANDONMENT OF EXISTING UTILITIES

1.0 GENERAL

A. Description

1. Removal or abandonment of existing utilities and underground structures shall include, but not necessarily be limited to, the removal, salvage, demolition in place, abandonment, or other disposition of existing utilities, underground structures, or other facilities shown on the plans, encountered in the course of the work, and/or as directed by the County and in accordance with the Contract Documents.

2. All materials resulting from demolition work, except as indicated or specified otherwise, shall become the Contractors property. Salvaged materials specified to remain the property of the County shall be transported to another location designated by the County.

B. Related Work Included Elsewhere

1. Trench Excavation, Backfill, and Compaction: Section 02250

2. Water Mains: Section 02660

3. Gravity Sanitary Sewer and House Connections: Section 02700

4. Sanitary Sewer Manholes: Section 02710

5. Cast-in-Place Concrete: Section 03300

6. Mortar: Section 04100

7. Brick Masonry: Section 04200

C. Quality Assurance

The County will inspect all materials and work to insure compliance with the Contract Documents.

2.0 MATERIALS

A. General

Materials shall be furnished in accordance with the Contract Documents and the current edition of the Approved List of Suppliers and Materials for Water and Sewer Main Construction.

B. Materials Furnished by the County

Not Applicable.

C. Contractor's Options

None

D. Detailed Material Requirements

1. Borrow material for backfilling the space left by removal of facilities or backfilling abandoned structures shall meet the requirements specified in Section 02250.

2. Pipe plugs and caps for water main abandonment shall be as specified in Section 02660.

3. Pipe plugs for sewer main abandonment shall be a heavy-duty, conical-shaped, cast iron body sewer pipe plug with expandable rubber diaphragm with malleable iron wing nut.

4. Portland cement concrete for abandonment of utilities shall be Mix No. 1 as specified in Section 03300.

5 Mortar shall be as specified in Section 04100.

6 Brick for pipeline and structure bulkheads shall be sewer brick as specified in Section 04200.

3.0 EXECUTION

A. General

1. Utilities to be abandoned or removed shall not be abandoned or removed until all required proposed utility work is installed and tested to the complete satisfaction of the Director. Furthermore, the Contractor shall notify the Director at least three (3) days prior to beginning the abandonment or removal.

2. The area over the existing facility to be removed shall be excavated and, after removal or abandonment as specified, backfilled and compacted in accordance with Section 02250.

3. Brick construction shall be as specified in Section 04200 and as specified herein.

4. Rubbish and debris shall be removed from the site unless otherwise directed so as to not allow accumulations inside or outside the project site. Materials that cannot be removed daily shall be stored in areas approved by the County.

B. Removal

Where indicated on the Plans, or directed by the County, existing utility pipelines and/or appurtenances shall be removed by the Contractor.

C. Abandonment

1. Sanitary Sewers 18-inch Diameter and Smaller

a. All open ends of abandoned sewer pipe shall be sealed by setting the mechanical plug in the pipe followed by concrete fill as shown in the standard detail. Existing manhole channels and benches shall be reconstructed as necessary with brick and mortar to provide a smooth transition within the manhole.

b. Abandon sewer services by removing the vertical stack to a minimum depth of 4 feet below finish grade. The stack shall be detached by saw cutting. A sewer plug shall be installed on the abandoned vertical stack and encased in concrete a minimum of 12-inches around all sides of the stack. Backfill shall be as specified in Section 02250.

2. Sanitary Sewers 18-inch Diameter and Larger

a. All open ends of abandoned sewer pipe shall be sealed by constructing a minimum 20-inch thick brick and mortar or concrete bulkhead.

b. Where a sewer is to be abandoned while the adjacent manhole is to remain active the Contractor shall seal (watertight) the pipeline opening in the manhole with a minimum 20-inch thick brick and mortar or concrete bulkhead. Existing manhole channels and benches shall be reconstructed as necessary with brick and mortar to provide a smooth transition within the manhole.

3. Sanitary Manholes

a. Frames and covers of abandoned manholes will remain the property of Harford County. They shall be removed from the structure and transported to a designated location.

b. The Contractor shall remove the structure to at least three feet (3’ - 0") below finished grade in accordance with the standard detail.

c. Pipe openings within the manhole shall be sealed in accordance with the Standard Details.

4. Water Mains and Appurtenances

Where indicated on the Plans, or directed by the County, the Contractor shall abandon existing water mains and/or appurtenances as follows:

a. The section of water main remaining in service shall be capped or plugged and strapped and/or buttressed in accordance with the Contract Documents.

b. When abandoning water mains 20-inches in diameter and larger, construct a 20-inch thick brick and mortar or concrete bulkhead, or plug, or cap each end of the abandoned sections. All open ends of abandoned water pipe shall be sealed.

c. For water mains smaller than 20-inch diameter, install plugs or caps at each end of the abandoned sections.

d. Abandon water services by exposing the corporation stop at the main, turning stop off, disconnecting the service line from the corporation stop, inserting a plug or cap on the exposed end of the corporation stop, encasing corporation in 6 inches of concrete, and backfill excavation to finished grade. Water services larger than two inches in diameter shall have the valve at the main removed, the service capped, and encased in 12-inches of concrete.

e. The Contractor shall remove all structures to a minimum depth of three feet below finished grade, break or drill holes in the bottom of the structure to provide drainage, and backfill the structure as specified in Section 02250.

f. Fire hydrants shall be returned to the Division of Water and Sewer Maintenance office at 3111 Philadelphia Road, Abingdon, Maryland.

4.0 METHOD OF MEASUREMENT

A. Removal

Measurement for removal of existing utilities and appurtenances will be made horizontally along the centerline of the pipe for each size and type of pipe removed without deduction for valves or fittings. Measurement for removal of existing structures will be made on the basis of the count or number of structures removed.

B. Abandonment

Measurement for abandonment of existing utilities and underground structures will be made on the basis of the count or number of pipeline sections and/or structures abandoned.

5.0 BASIS OF PAYMENT

A. General

1. Payment will be made at the unit prices bid. The prices bid shall include furnishing all labor, tools, equipment, and materials necessary to satisfactorily complete the work as shown, specified, and in strict accordance with the Contract Documents.

2. The price bid for removal or abandonment of existing utilities and underground structures shall include the following:

   a. Excavation, backfill, and compaction as specified in Section 02250.

   b. Furnishing and installing borrow material for backfilling the space left by removed facilities, initial excavation, and/or abandoned structures as required by the Contract Documents.

   c. Storage of materials to be retained by the County, and disposal of those materials which the County does not want to retain.

   d. Furnishing materials for and constructing or installing caps, plugs, and/or bulkheads and appropriate concrete blocking on pressurized mains.

   e. Furnishing materials for and reconstructing channels or benches in existing manholes and/or structures.

3. Payment will be made for contingent items when approved by the County.

B. Removal

Payment for removal of existing utilities will be made at the unit price bid per linear foot for each size and type of pipe removed. Payment for removal of existing structures will be made at the unit price bid per each structure removed. The price bid shall include all traffic control, surface restoration and incidental items to remove the existing utility or underground structure.

C. Abandonment

Payment for abandonment of existing utilities and underground structures will be made at the unit price bid per each section of utility and/or structure abandoned. The price bid shall include all traffic control, surface restoration, and incidental items to abandon the existing utility or underground structure.

This page has been intentionally left blank.

SECTION 02110
CLEARING AND GRUBBING

1.0 GENERAL

A. Description

1. Clearing and grubbing shall include, but not necessarily be limited to, clearing areas of trees, brush, shrubs, down timber, rotten wood, other vegetation, debris and rubbish, as well as removal of fences and incidental structures; and grubbing or removing from the ground all stumps, roots and stubs, brush, organic materials, and debris, as shown and as specified in the Contract Documents and within the limits of disturbance.

2. For developer projects, the Contractor shall be responsible for acquiring all required permits associated with tree removal and tree trimming. For capital projects, the Contractor shall obtain a permit for any tree clearing outside of the L.O.D. and within the State Highway Administration right-of-way from the Maryland Department of Natural Resources prior to construction.

B. Related Work Included Elsewhere

None

C. Quality Assurance

The County will inspect the work to insure that it is performed in accordance with the Contract Documents.

2.0 MATERIALS

Not applicable.

3.0 EXECUTION

A. Limits

1. General

a. Unless otherwise indicated in the Contract Documents, all trees and other growth within the drainage and utility easement or rights-of-way shall be removed. In certain situations, designated trees may be required to be saved and shall be designated on the construction drawings.

b. Within the limits indicated on the Contract Documents to be cleared and grubbed, the County has the right to designate trees and other growth which the County may desire to leave standing. Unless otherwise shown or specified, the entire width and length of easements shall be cleared and grubbed.

c. The clearing and grubbing operation shall be completed in its entirety within 100 linear feet in advance of any water and sewer utility construction.

B. Unsuitable Materials

Note that after the clearing and grubbing operations are completed, unsuitable materials such as unstable formations, root mat, or swamp muck encountered below the surface of the ground must also be removed and properly disposed.

C. Salvaged Materials

When indicated, such materials as leaf mold or other organic materials above the surface of the ground and suitable for use as mulch or topsoil shall be salvaged and stockpiled.

D. Trees, Shrubbery and Plants

On County capital projects, the Contractor shall schedule a meeting with the County project manager and inspector to review which trees, shrubs, and vegetation shall not be disturbed. The County will discuss which trees, shrubbery, and plants which are not to be removed, and the Contractor shall protect them from any damage, as outlined in the “General Provisions.” Where trees which are left standing are trimmed or become scarred by the Contractor’s operations, the cuts or scars shall be repaired by the Contractor. All trimming and repairs shall be done by skilled workmen and in accordance with good tree surgery practices under the supervision of a tree expert licensed by the State of Maryland.

E. Burning

If allowed, the Contractor shall obtain the appropriate permits to allow the burning of trees, brush, trash, or other perishable materials. If burning is prohibited by the Fire Marshall, the Contractor shall remove these materials and dispose of them off-site in permitted disposal facilities.

F. Disposal Locations

Perishable materials and debris shall be removed from the site easement or right-of-way and disposed of at locations off the project and outside the limits of view from the project by the Contractor. The Contractor shall make all necessary arrangements with property owners, in writing, for obtaining suitable disposal locations, and furnish the County with a copy of the agreement. The cost involved shall be included in the price bid. The Contractor shall be responsible for obtaining all State and local permits for the disposal

locations and furnish the County with evidence indicating the sites are approved for disposal.

G. Fences

All fences within the easement or right-of-way that are identified to remain shall be removed as carefully as practicable and replaced so that it remains in a condition equal to or better than what existed prior to construction.

H. Excavation Areas

Within areas to be excavated, all imbedded stumps, root mats, etc., shall be removed to a depth of not less than 1-foot below the subgrade or slope surfaces. All depressions made below the subgrade or slope surfaces by the removal of stumps or roots shall be refilled with materials suitable for embankment and shall be compacted in accordance with the requirements in Section 02250.

4.0 METHOD OF MEASUREMENT

The amount of clearing and grubbing will not be measured.

5.0 BASIS OF PAYMENT

Payment for clearing and grubbing will not be made, as it shall be included in the unit quantity item for all pipe and structures installed.

This page has been intentionally left blank.

SECTION 02240
AGGREGATE BACKFILL

1.0 GENERAL

A. Description

Aggregate backfill shall include, but not necessarily be limited to, furnishing and placing granular material for the installation of pipes, fire hydrants, manholes, vaults, and other structures as directed by Harford County, indicated on the plans, and in accordance with the Contract Documents.

B. Related Work Included Elsewhere

1. Trench Excavation, Backfill, and Compaction: Section 02250
2. Water Mains: Section 02660
3. Water Services and Appurtenances: Section 02664
4. Fire Hydrants: Section 02666
5. Gravity Sanitary Sewer and House Connections: Section 02700
6. Sanitary Sewer Manholes: Section 02710
7. Sanitary Sewer Force Mains: Section 02720

C. Quality Assurance

All aggregate fill material will be subject to test by the County to determine the material's compliance with the Contract Documents.

2.0 MATERIALS

A. Materials Furnished by the County

The County will not furnish aggregate fill material.

B. Contractor's Options

When properly compacted, sand that meets the Maryland SHA requirements for fine aggregate may be used for PVC water mains and sanitary force mains in lieu of Size 57 as shown on the Standard Details.

C. Detailed Material Requirements

1. Aggregate fill material for the installation of pipes, hydrants, manholes, vaults and miscellaneous structures as noted in the Standard Details shall meet the requirements of AASHTO M43, Size 57.

2. Aggregate fill material for subgrade stabilization shall meet the requirements of AASHTO M 43, Size 3.

3. Aggregate backfill material that meets the Maryland SHA requirements for graded aggregate subbase may be used with the approval of Harford County.

3.0 EXECUTION

A. If areas of the foundation are soft, composed of mud, or are, in the County's judgement, unfit to receive the pipe, structure, concrete, or masonry, then such unacceptable material shall be removed and replaced with aggregate fill material as directed by Harford County.

B. The aggregate backfill material shall be carefully placed to the dimensions indicated on the plans or directed by Harford County.

C. Except for Size 57 or 3, all aggregate backfill material shall be compacted.

D. Aggregate fill shall not be dropped from heights in excess of 5 feet above utility.

4.0 METHOD OF MEASUREMENT

A. Except when used as a contingent item or noted otherwise, measurement for aggregate fill will not be made, as it shall be included in the unit quantity item for all pipe and structures installed.

B. When used as a contingent item or noted otherwise, measurement for furnishing and installing aggregate fill will be made on the basis of the volume of material accepted and satisfactorily placed to the lines, grades, and dimensions shown in the Contract Documents.

5.0 BASIS OF PAYMENT

A. General

1. Except when used as a contingent item or noted otherwise, payment for aggregate fill will not be made, as it shall be included in the unit quantity item for all pipe and structures installed.

2. When used as a contingent item or noted otherwise, payment will be made at the unit price bid. The price bid shall include furnishing all labor, tools, equipment, and materials necessary to complete the work as shown and specified in strict accordance with the Contract Documents.

3. Payment will be made for contingent items when approved by the County.

B. Aggregate Fill

1. Payment for furnishing and installing aggregate fill complete and in place will be made at the contingent prices established in the bid proposal. The price shall include all traffic control, and incidental items to complete excavation and placement.

2. Payment for removal of unacceptable foundation material will be made under the pertinent contingent item.

3. No payment will be made for any aggregate fill which is used because of any error in the Contractor's operations, such as excavating beyond specified lines or grades, etc.

This page has been intentionally left blank.

SECTION 02250
TRENCH EXCAVATION, BACKFILL AND COMPACTION

1.0 GENERAL

A. Description

Trench excavation, backfill and compaction shall include, but not necessarily be limited to, the excavation, backfill, and compaction of trenches for pipelines, fire hydrants, valves, manholes, vaults and other structures shown on the Plans, and in accordance with the Contract Documents.

B. Related Work Included Elsewhere

1. Test Pits: Section 02012
2. Removal and Abandonment of Existing Utilities: Section 02050
3. Aggregate Backfill: Section 02240
4. Boring and/or Jacking Pipe: Section 02300
5. Tunneling: Section 02400
6. Water Mains: Section 02660
7. Water Valves and Appurtenances: Section 02662
8. Water Services, Water Meter Settings and Vaults: Section 02664
9. Fire Hydrants: Section 02666
10. Gravity Sanitary Sewer and House Connections: Section 02700
11 Sanitary Sewer Manholes: Section 02710
12. Sanitary Sewer Force Mains: Section 02720

C. Quality Assurance

All materials removed from trench excavations and used for backfill will be subject to test by the County to determine the material's suitability for use as backfill.

2.0 MATERIALS

A. Materials Furnished by the County

The County will not furnish any materials for trench backfill other than those materials which are available from the trench excavation limits as shown on the Standard Details and the Contract Documents.

B. Contractor's Options

Not applicable.

C. Detailed Material Requirements

1. Material for backfills may be from on-site excavations (if of proper quality) or from borrow sources. The material shall be free from organic material, sludge, grit, trash, muck, roots, logs, stumps or frozen material and other deleterious substances. Except as otherwise specified or approved, the material shall not contain rocks or lumps larger than six inches in greatest dimension. The material shall not contain mica in quantities which, in the judgment of the County are sufficient to affect compaction characteristics. The use of any soil additive that in the judgment of the Director may adversely affect the proposed utility is strictly prohibited.

2. Material for Backfill shall be as follows:

a. Select Material - Within public right-of-way, private roads and parking lots within drainage and utility easement, business, commercial, and industrially-zoned properties, areas supporting vehicular loads, and as specified herein or noted in the Contract Documents.

AASHTO Soil Classification Sieve Analysis (% passing)	A-1	A-2	A-3
No. 10 (2.0 mm)	50 max.	- - -	- - -
No. 40 (0.425 mm)	50 max.	- - -	51 min.
No. 200 (0.075 mm)	25 max	35 max.	10 max.
Typical Material	Stone fragment, gravel and sand	Silty or clayey gravel and sand	Fine sand

Additionally, the following material is allowable under the Unified Soil Classification System: GW and SW, or a well graded aggregate meeting the Maryland State Highway Administration requirements for roadway sub-base.

The maximum dry density shall be 105 lb/ft^3 or greater as measured by AASHTO T-180, Method C. The liquid limit and plasticity index for the portion of material passing the No. 40 size shall not exceed 41 and 10 respectively.

b. Suitable Material – All other areas not required under paragraph a. above.

The maximum dry density shall be 100 lb/ft^3 or greater as measured by AASHTO T-180, Method C, unless the material has more than 35 percent retained on the No. 4 sieve in which case Method D shall be used. Suitable Material shall include all material designated as Select Material as well as material classified in the Unified Soil Classification System (USCS) as ML, CL, MH and CH.

c. Structural Fill – Structural fill shall be placed and compacted against cast-in-place concrete structures in accordance with the requirements specified in the Contract Documents.

3. Use and Ownership of Excavated Material

a. All Suitable Material excavated from utility trenches shall be used, as far as practicable, for backfill in trenches.

b. The Contractor shall properly store, stockpile and protect all materials that are to be reused in the work. The Contractor shall replace, at his own expense, material that was suitable when excavated, which has subsequently become unsuitable because of careless, neglectful, wasteful, or unprotected storage. The Contractor shall have no property right in any material taken from any excavation and no excavated material shall be wasted or otherwise removed from the project site without permission of the County. All unsuitable and surplus Suitable Material, as determined by the County, shall be removed from the excavation and disposed of off-site by and at the expense of the Contractor in accordance with all applicable Federal, State, and local regulations.

c. If insufficient suitable soils are available from excavation on the contract project, the Contractor may obtain suitable soils from sources designated in the Special Provisions, or from such sources within 300 yards of the site as may be approved by the County. If these sources do not supply sufficient suitable soils, the Contractor shall submit for inspection and test by the County borrow excavation sites from which such soils as may be required to complete the construction of excavation backfill on the contract project. Borrow Excavation shall be supplied and placed at the contract unit price or when not provided for in the contract at a negotiated price for "Extra Work".

4. Aggregate backfill for pipe and structure installation, bedding and trench backfill shall meet the gradation requirements specified herein and Section 02240.

3.0 EXECUTION

A. Surface Preparation

1. Sediment Control

The Contractor shall install all required sediment control devices in accordance with permits and all applicable Federal, State and local regulations.

2. Clearing and Grubbing

The Contractor shall clear and grub the surface over the line of the trench in accordance with the requirements of Section 02110.

3. Removing Pavement, Sidewalk, Curb, etc.

   a. Prior to removal, the Contractor shall saw-cut all existing pavement, sidewalk and curb. Jack hammering edges of pavement, sidewalk and curb removal is prohibited.

   b. The Contractor shall remove paving only to the width shown on the Standard Details, noted in the Special Provisions, or as directed by the County. When the Contractor removes paving for a greater width than is deemed necessary or disturbs paving, sidewalk, curbs, etc. due to settlement, slides, or cave-ins, or in making excavation outside the limits of the trench without written order of the County, the County will require the Contractor to replace the excess damaged area and may retain from payments due the Contractor such amounts required to permanently replace the excess material removed. The Contractor shall be responsible for repaving or surfacing roadbeds or replacing sidewalk, curbs, etc. that have failed, settled, or have been damaged at any time before expiration of the Contract maintenance period due to work or any other activities by the Contractor, his subcontractors, or suppliers.

4. Maintaining Traffic

   The Contractor shall furnish all labor, tools, equipment, and materials required for the maintenance of traffic during construction in accordance with the traffic control plan or permits.

B. Trench Excavation

1. General

   a. Excavation for the installation of utilities shall be unclassified and shall consist of the excavation removal and/or disposition of all material encountered to the lines, grades, and sections shown on the Plans and/or the Standard Details, as specified, or as directed by the County.

   b. Unless otherwise indicated, excavation shall be by open cut, except that short sections of a trench may be tunneled, or the pipeline jacked, if, in the opinion of the County, the pipe can be safely and properly installed.

   c. Trenches shall be excavated and backfilled either by hand or by machinery. The Contractor shall have no claims, nor will extra compensation be allowed, for hand excavation or backfill which may be required by these Specifications or by the County for protection of existing utilities or structures.

2. Protection of Property and Structures

   a. The Contractor shall, at his own expense, sustain in place and protect from direct or indirect injury all existing facilities in the vicinity of the excavation, whether above or below the ground, or that may appear in the trench. The

Contractor shall be responsible for the implementation of protective measures associated with the presence or proximity of pipes, poles, tracks, walls, buildings, property markers, and other structures and property of every kind and description in or over his trenches or in the vicinity of his work whether above or below the surface of the ground. The Contractor shall repair or replace damaged facilities at his expense.

b. The Contractor shall be responsible to obtain any applicable local, State and Federal permits associated with dewatering. Dewatering means and methods shall be the responsibility of the Contractor.

3. Utility Adjustments

a. All adjustments to utilities other than those owned by the County shall be performed by the utility owner.

b. Adjustments to water services between the property line and the water main shall be performed by Harford County pre-qualified utility contractors. Adjustments between the property line and the house shall be performed in accordance with Harford County Plumbing Code. It shall be the Contractor's responsibility to obtain all permits necessary for the performance of this work.

c. Adjustments to sanitary sewers within the County Easement or right-of-way shall be accomplished by a Harford County pre-qualified utility contractor. Adjustments to sanitary sewers outside the County Easement or right-of-way shall be performed in accordance with the Harford County Plumbing Code. It shall be the Contractor's responsibility to obtain all permits necessary for the performance of this work.

4. Obstructions Shown on Plans

a. Certain information regarding the reputed presence, size, character, and location of existing underground utilities and structures has been shown on the Plans based upon available records. There is no certainty of the accuracy of this information, and it shall be considered by the Contractor in this light. If test pit data is not shown on the Plans, the Contractor shall excavate test pits in advance of his work in accordance with Section 02012 to locate existing utilities. The Contractor shall hereby distinctly understand that the County is not responsible for the correctness or sufficiency of the information given. The Contractor shall have no claim for delay or extra compensation on account of incorrectness of information given, or on account of the insufficiency or absence of information regarding obstructions. The Contractor shall have no claim for relief from any obligation or responsibility under the Contract in case the location, size, or character of any underground facility is encountered that is not shown on the Plans.

b. It shall be the responsibility of the Contractor to notify "MISS UTILITY," all municipal utilities, all utility line owners, and any other parties affected prior

to the beginning of work. It is the Contractors responsibility to reference and maintain the location markings during the construction of the project. In the event that a utility location needs to be re-established by Harford County, the cost to provide this shall be borne by the Contractor.

5. Removing Obstruction

   a. Should the position of any pipe, conduit, or other structure above or below ground be such as, in the opinion of the County, to require its removal, realignment, or change due to the work to be done under the Contract, the work of removal, realignment, or change will be done as extra work, or will be done by the owner of the obstructions without cost to the Contractor; but the Contractor shall uncover and support the structures in the limits of his trench at his own expense before such removal, and before and after such realignment or change. Whether the obstruction is shown on the Plans or not, the Contractor shall not be entitled to any claim for damage or extra compensation on account of the presence of said structure or on account of any delay in the removal or rearrangement of the same; however, if said structure is not shown on the Plans, time extension will be allowed if deemed to be warranted by the County.

   b. In the event that obstructions would delay the work of pipe installation, the Contractor may, with prior written County approval, be permitted to leave a gap in the work and return to fill the gap after the obstructions have been removed. The installation shall be completed by laying full pipe lengths and appropriate closure pieces.

   c. The Contractor shall not interfere with any persons, firms, or corporations or with the County in protecting, removing, changing or replacing pipes, conduits, poles, or other structures.

   d. In the event that the County has entered into any agreement with an affected utility owner or owners which will have an effect on the operations or financial responsibilities of the Contractor, the requirements of these agreements will be included in the Special Provisions of the Contract.

6. Change of Trench Location

   a. In the event the County directs that the location of a trench be changed to a reasonable extent from that proposed on the drawing on account of the presence of an obstruction, or from other cause, or if a changed location shall be authorized upon the Contractor's request, the Contractor shall not be entitled to extra compensation or to a claim for damages; provided that the change is made before the excavation is begun. If, however, such change, made at the direction of the County involves the abandonment of excavation already made, such abandoned excavation together with the necessary backfill, will be considered extra work and the Contractor shall be compensated accordingly. In the event that the trench is abandoned in favor of a new location, at the Contractor’s request, the abandoned excavation and backfill shall be at the Contractor’s expense.

b. If an obstruction shall lie within the trench in such manner that the trench has to be excavated to extra width in order that sheeting or bracing may be properly placed, or in order that a structure to be placed in the trench may be properly built, such extra width of trench shall be classed as miscellaneous excavation. No sloping of sides of excavation, however, for the purpose of avoiding the necessity of placing sheeting or bracing, either in the presence or absence of obstructions, will be considered as excavation beyond pay limits.

7. Trench Width and Depth

a. Trenches shall be excavated to the necessary width and depth as may be shown on the Plans or Standard Details, as specified in the Special Provisions, or as directed. The trench subgrade shall be such as to provide a uniform and continuous bearing and support for the pipe on solid undisturbed earth for the full length of each pipe, except for that portion at the bell hole. Any part of the bottom of the trench excavated below subgrade shall be backfilled with approved material and compacted in accordance with Contract Documents.

b. Subgrade, in the case of pipe lines, shall be six (6) inches below the underside of the pipe barrel, where the pipe is laid on granular bedding. Where the pipe is laid on a natural foundation, subgrade shall be four (4) inches below the underside of the pipe barrel.

c. The sides of the trenches shall be practically plumb and under no circumstances will they be permitted to be sloped except with the written approval of the County. Should the Contractor elect to slope or cut-back the sides of the trench, no additional payment will be made for extra excavation, backfill, restoration, or contingent items beyond the limits indicated on the Standard Details.

d. Bell holes shall be excavated in the bottom of the trench to ensure that pipe has continuous bearing.

e. Where sheeting or trench boxes are used, the maximum width shall be as noted in the Standard Details.

8. Length of Open Trench

a. The Contractor shall keep the backfill operation to the top of trench for offsite and existing areas and to road subgrade in areas of new construction, within 100 feet of excavation and pipe laying operations. The County reserves the right to require the backfilling of open trenches over completed pipe lines if, in his judgment, such action is necessary; and the Contractor shall thereby have no claim for extra compensation, even though to accomplish said backfilling, he is compelled temporarily to stop excavation or other work at any place.

b. All trenches shall be closed at the end of each work day.

c. The excavation of all trenches shall be fully completed at least one full pipe length in advance of pipe installation, unless otherwise authorized.

9. Responsibility for Condition of Excavation

The Contractor shall be responsible for the condition of all excavations made by him.

10. Trench Support

a. The support of the trench shall be the sole responsibility of the Contractor.

b. The Contractor shall support the sides and ends of all excavations wherever necessary with braces, sheeting, shoring or stringers, trench boxes, or other acceptable excavation support systems. All trench support systems shall be installed by men skilled in such work and shall be so arranged that it may be withdrawn as backfilling proceeds, without injury to the utility or structure constructed or to any roadbed, adjacent structure or property.

c. All timbering in excavations, trench boxes, or excavation support systems shall be withdrawn as the backfilling is being done, except where and to such extent as the County shall order in writing that said timbering or excavation support system be left in place or where the County permits the trench support to be left in place at the Contractor's expense and upon his request. The Contractor shall cut off any sheeting left in place 2 feet below finished grade and shall remove the material cut off without compensation therefore.

d. Wherever necessary, in running sand, or soft ground, or for the protection of any structure or property, sheeting shall be driven without extra compensation to such a depth below the bottom of the trench as may be required or directed. Where directed by the County to leave sheeting in place, payment will be made under the appropriate contingent item.

e. All work shall be performed in accordance with the latest applicable Federal, State, and local safety and health regulations.

11. Drainage and Dewatering

a. The Contractor shall grade the site as necessary to prevent surface water ponding or from flowing into the trench or other utility excavations and shall provide all necessary temporary surface drainage and keep the same operating to the satisfaction of the County until permanent drainage or finished grading and permanent surface stabilization has been completed.

b. It shall be the Contractor's responsibility to adequately control water that may be present in the excavation. He shall provide for the disposal of water removed from excavations in such a manner not to cause damage to public or private property or to any portion of the work completed or in progress or cause any impediment to the use of any area by the public; nor shall the Contractor discharge any flushing or ground water or any material of any

nature into existing sanitary sewer system during the construction of the facilities. All water shall be discharged through an approved sediment control device. The costs of dewatering trench excavations will not be paid for directly, but will be included in prices bid for other related items.

12. Excavation Below Subgrade

    a. The Contractor shall, without additional compensation, before any pipe or appurtenance is installed, fill all unauthorized depressions or irregularities in the bottom of the trench or tunnel with aggregate fill.

    b. Where the bottom of the trench, at subgrade, is in unstable or unsuitable material, excavation shall be carried to such depth as ordered by the County. The trench bottom shall be restored to subgrade with aggregate fill. Excavation and backfill for removal of unsuitable material will be paid for under the appropriate contingent item.

C. Backfill

1. The Contractor shall backfill all trenches as rapidly as practicable after the installation of the utility therein, or after the excavation has served its purpose.

2. Subgrade to 2'-0" above top of pipe: Unless otherwise noted in the Construction Drawings, Specifications or Permits, backfill material shall be carefully placed around and to a depth of two feet over the pipe. These initial lifts shall be carefully placed and hand-tamped in four inch layers. Care should be exercised in this operation to insure that the alignment of the utility is not disturbed.

3. 2'-0" above top of pipe to top of trench: The remainder of the trench may be backfilled in layers not exceeding the specified compaction lift depths. However, if lift thickness is followed and the specified compaction is not obtained based on the testing during backfilling, the Contractor shall, at his own expense, remove, replace, and retest as many times as is required to obtain the specified compactions. In backfilling the remainder of the trench, stones of not more than 6 inches in largest dimension which have been taken out in excavating may be mixed with earth in an amount not exceeding 25% of the backfill volume. Stones of larger size or in greater quantities shall not be used, unless directed by the County. The Contractor shall not permit excavations to be used for the disposal of refuse.

4. In paved areas, the Contractor shall furnish and backfill the trench as per the requirements of the governing regulatory agency, and/or Contract Documents.

5. Should additional material be required for backfilling in excess of that obtained from excavation, the Contractor shall obtain Borrow material from off-site sources, to complete the trench backfill.

6. Use of frozen backfill material is prohibited.

7. Pipe, structures, appurtenances and backfill material shall not be laid upon frozen soil or aggregate.

D. Compaction

1. In unimproved areas (areas not identified in paragraph 2 below), compaction shall be accomplished as follows for the remaining depth of trench: Suitable Material shall be placed in maximum 2 foot layers or as approved by the County and compacted in such a manner that a completely dense refill is obtained which is free of voids and not susceptible to undue settlement or depression.

2. Soil compaction, certified by a soils testing company will be required under the following conditions, unless otherwise shown on the Construction Drawings, noted in the Specifications or required in the permit:

   a. Road Right-of-Ways, Roadways, driveways, parking lots, sidewalks and other easement areas with vehicular loads; and all business, commercial or industrial property.

      The remaining trench depth up to a depth of two feet below sub-base shall be backfilled with Suitable Material and mechanically tamped in layers not to exceed twelve inches to not less than 92% of the maximum density at optimum moisture content as determined by the Modified Proctor Method, AASHTO Designation T-180. The remaining trench shall be backfilled with Select Material (top 1-foot) shall be compacted to not less than 97 percent of the maximum dry density determined as noted above. All compaction must comply with the aforementioned or the latest edition of the governing applicable road code or permit whichever is most stringent. In some circumstances, lawn and landscaped areas may require the above compaction standards.

   b. Residentially Zoned Property (Maintained lawn and landscaped areas)

      The remaining trench depth shall be backfilled with Suitable Material and mechanically tamped in layers not to exceed twelve inches to not less than 85% of the maximum density at optimum moisture content as determined by the Modified Proctor Method, AASHTO Designation T-180.

3. Insofar as the specifications for mechanical tamping equipment or methods are concerned, no specific requirements are included in these Specifications other than that the use of any particular type of equipment is subject to the approval of the County and that the County has the right to judge if equipment is unsuitable for the uses intended. The Contractor shall be cognizant that use of hand-tamping equipment may be required around existing utilities.

4. For developer projects, the developer or contractor shall inspect and test the soil compaction utilizing a County-approved soils testing company to ensure the requirements are met in paragraph 2 above. A full-time soils testing technician shall be on-site performing compaction tests during all backfilling operations. The following shall be required of the soils testing company:

   a. Prior to construction, perform modified Proctor Test T-180 on bag samples of proposed backfill material for the purpose of obtaining moisture-density relationship curves (Proctor curves). The soils technicians inspecting the backfilling operations shall have the proctor curves with them at all times.

b. Monitor and document all backfill operations that are subject to compaction certification.

c. The soils technicians shall assure each lift meets the compaction requirements noted on the construction drawings. Testing shall occur at least once each day on every lift, with the spacing of the tests not to exceed 100 feet. The moisture and density of the soil shall be tested by either the sand cone method or by nuclear density gauge. The soils technician shall notify the contractor if any lift does not meet the compaction requirements. The contractor shall then re-compact the backfill as necessary until the minimum compaction has been achieved. The soils technician shall note the station and depth of each test and re-test with results. The contractor shall not proceed until the minimum compaction requirements have been met.

d. The soils technician shall provide the County Inspector with copies of the reports on a daily basis on the day the testing occurred.

e. The soils technician shall take moisture tests of the backfill material a minimum of twice daily. If the tested soil moisture will prevent the required density, the technician shall immediately notify the Contractor. The Contractor shall then take the necessary steps to modify the soil moisture to acceptable levels that will achieve the minimum compaction requirements without the use of additives.

f. The soils technician shall determine if the backfill material meets the requirements of the Standard Specifications.

For capital projects, Harford County will retain the services of a soils testing company at the County's expense.

E. Maintenance of Backfilled Trench

1. All backfilled trenches shall be maintained in an acceptable condition by and at the expense of the Contractor for a period of twelve (12) months following the date of conditional acceptance of the work.

2. If the Contractor fails to fill depressions in the backfilled trench within 24 hours after the receipt of notice from the County, the County may refill said depressions and the cost thereof shall be retained from any monies due the Contractor, under the Contract. In case of emergency, the County may refill any dangerous depression or protect with lights wherever necessary without giving previous notice to the Contractor; and the cost of so doing shall be retained from any monies due to become due the Contractor under the contract.

3. The Contractor shall be responsible for any injury or damage that may result from lack of maintenance of any refilled excavation at any time prior to final acceptance of the Project.

4.0 METHOD OF MEASUREMENT

A. Trench Excavation, Backfill and Compaction

Trench excavation, backfill, and compaction will not be measured as a separate item, but will be included with other items of work contained in the Bid Documents.

5.0 BASIS OF PAYMENT

A. General

1. No separate payment will be made for trench excavation, backfill, and compaction. The cost shall be included in the price bid for installing pipe, or constructing the various appurtenances included in the Contract. The bid prices shall include furnishing all labor, tools, equipment, and materials necessary to complete the work as shown and specified in strict accordance with the Contract Documents.

2. Payment will be made for contingent items when approved by the County.

B. Trench Excavation, Backfill and Compaction

In addition to the work listed above, trench excavation, backfill, and compaction shall also include the traffic control, removing, storing, and rehandling of surface materials over the trench, including paving; the scoring of existing paving in a straight and uniform line; the excavation of all materials encountered in the trench including excavation at manholes, structures, vaults, and other appurtenances that may be shown or required, and any extra excavation necessary for sheeting or bracing or installation of other excavation support systems; the backfilling and compaction of trenches; the removal and disposal of unsuitable and/or surplus material; and all other incidental items to complete the work.

SECTION 02300
BORING AND/OR JACKING PIPE

1.0 GENERAL

A. Description

Boring and/or jacking pipe shall include, but not necessarily be limited to, furnishing and installing carrier pipe and/or casing pipe beneath railways, roadways, or other locations indicated on the Plans and in accordance with the Contract Documents. The work consists of the furnishing of a trenchless installation which serves as a casing for utilities. The trenchless excavation shall be installed to the lines and grades shown on the Construction Drawings. The Contractor shall be responsible for selecting a method suitable for the conditions to be encountered and to assure no disturbance to the existing surface.

B. Related Work Included Elsewhere

1. Aggregate Backfill: Section 02240

2. Trench Excavation, Backfill, and Compaction: Section 02250

3. Water Mains: Section 02660

4. Water Services and Appurtenances: Section 02664

5. Gravity Sanitary Sewer and House Connections: Section 02700

6. Sanitary Sewer Force Mains: Section 02720

C. Quality Assurance

The County will inspect all materials before, during, and after installation to ensure compliance with the Contract Documents.

D. Railroad Crossings

No work shall begin without a fully executed Agreement between the County and the Railroad. The Contractor is required to read and adhere to all terms and conditions of the Agreement. The Contractor shall furnish and install all materials specified in the Agreement.

2.0 MATERIALS

A. Materials Furnished by the County

The County will not furnish any materials for boring and/or jacking pipe.

B. Detailed Material Requirements

1. Portland Cement Concrete

Portland cement concrete for inverts or cradles shall be Mix No. 1 as specified in Section 03300.

2. Mortar for Grout

a. Mortar used for grouting voids outside the casing pipe shall conform to the requirements of Section 04100 except that it shall be composed of one part Portland cement and three parts sand.

b. Mortar used for bulkheading sleeve ends shall conform to the requirements of Section 04100.

3. Brick Masonry

Brick Masonry for bulkheading sleeve ends shall conform to the requirements of Section 04200.

4. Steel Casing Pipe

a. Steel casing pipe shall be smooth walled and have a minimum yield strength of 36,000 psi (ASTM A-570, Grade 36). Minimum wall thickness shall be as noted herein or as specified in the Contract Documents. Pipe shall conform to AWWA C-200.

Casing Pipe

Nominal Pipe Size (inches)	Wall Thickness (inches)
12	0.375
16	0.375
20	0.375
24	0.375
30	0.500
36	0.500
48	0.500

b. The pipe shall be fabricated and field connected in accordance with Section 02660. Joints shall be fully welded around the circumference of the pipe.

c. The exterior of the pipe shall have a factory applied bituminous coating. The field connection shall also be bituminous coated before installation. Bituminous coating shall meet the requirements of AWWA C210.

5. Carrier Pipe

   Carrier pipe shall be as specified in the Contract Documents and meet the requirements specified in Sections 02660, 02700, or 02720 as appropriate.

6. Casing Spacer/Insulators

   a. Casing spacer/insulators shall be fabricated items capable of providing position, support and separation of carrier pipes inside casing pipes. Spacer/insulators shall be virtually corrosion-proof and resistant to sodium chloride and acids.

   b. Spacer/insulators shall provide the ability to position the carrier pipe within the casing. Unless otherwise approved by the Division of Water and Sewer, the concentric centering method shall be utilized. Spacer/insulators shall be capable of grade adjustment to position a gravity sewer to its required grade alignment within a casing pipe and to maintain the required carrier pipe alignment due to irregularities in the casing pipe alignment.

   c. Spacing/insulators shall be injection molded high density virgin polyethylene or an ultra high molecular weight polymer. The carrier pipe shall be capable of sliding within the casing pipe with minimal pushing force. The bearing surfaces of runners shall have a high resistance to wear and abrasion, high impact strength, low deflection under compression, and low coefficient of friction.

3.0 EXECUTION

A. Preparation

1. Bored and/or jacked pipe greater than 4 inches in diameter shall receive a casing pipe unless directed otherwise by the Director.

2. Preliminary work shall consist of excavating and sheeting a suitable shaft on the lower side of the crossing and installation of a backstop and guide rails. The guide rails shall be long enough to hold at least two lengths of pipe and shall be carefully checked for line and grade before any pipe is placed on them.

3. Design, construction, maintenance and removal of the jacking pit and receiving pits, including damage attributed to the construction of the pits shall be the responsibility of the Contractor. The Contractor shall be responsible for any necessary support or protection of utilities related to the jacking and receiving pit construction. Utility support and protections, for those utilities shown on the construction drawings shall be at no additional cost to the County.

4. The Contractor shall provide, operate and maintain for the duration of the construction, a ventilation system, lighting, and other health and safety measures suitable for meeting local, State and Federal health and safety requirements.

B. Boring and/or Jacking

1. When augers or similar devices are used for pipe emplacement, the front of the pipe shall be provided with mechanical arrangements or devices that will positively prevent the auger and cutting head from leading the pipe so that there will be no unsupported excavation ahead of the pipe. The arrangement shall be removable from within the pipe in the event an obstruction is encountered. The excavation by the cutting head shall not exceed the outside diameter of the pipe by more than ½ inch. The face of the cutting head shall be arranged to provide reasonable obstruction to the free flow of soft material.

2. If an obstruction is encountered during installation that stops the forward action of the pipe, and it becomes evident that it is impossible to advance the pipe, operations shall cease and the pipe abandoned in place and filled completely with flowable fly ash.

3. Bored or jacked installations shall have a bored hole essentially the same as the outside diameter of the pipe plus the thickness of the protective coating. If voids should develop or if the bored hole diameter is greater than the outside diameter of the pipe (plus coating) by more than approximately 1-inch, grouting or other methods approved by the County shall be employed to fill such voids.

4. When groundwater is encountered in the excavation, pumps of sufficient capacity to handle the flow shall be maintained at the site. The pumps shall be in constantly attended operation on a 24 hour basis until their operation can be safely halted. When dewatering, close observation shall be maintained to detect any settlement or displacement of surface facilities. Should settlement or displacement be detected, the Contractor shall notify the County immediately and take such action as necessary to maintain safe conditions and prevent any further damage. Discharge of groundwater shall meet all local, State, and Federal regulations and shall be borne by the Contractor at his expense.

5. All operations shall be conducted so as not to interface with, interrupt, or endanger the operation of traffic, or damage, destroy, or endanger the integrity of any surface facilities.

6. Carrier pipe will be tested in accordance with Section 02660 or Section 02700 as applicable.

7. Each end of the sleeve will be bulkheaded in accordance with Section 02050.

C. Installation of Carrier Pipe

1. Carrier pipe shall be installed within the casing pipe as shown in the Contract

Documents and as specified in Sections 02660, 02700, and 02720.

2. There shall be no direct contact between carrier pipe and casing pipe. There shall be no less than three pipe spacer/insulators per segment of pipe. The first spacer shall be placed not more than two feet from each end of the casing pipe. Spacer placement intervals shall be set to maintain joint stability during and after installation, to maintain separation distance between casing and carrier pipe and to maintain required grade adjustments. Interval between spacers shall be seven to nine feet however, manufacturer recommendations shall be adhered to for type, size, and live load of carrier pipe.

4.0 METHOD OF MEASUREMENT

A. Casing Pipe

Measurement for bore and/or jacked casing pipe will be made of the length of casing pipe satisfactorily installed. Measurement will be made horizontally along the centerline of the pipe between the ends of the casing pipe.

B. Carrier Pipe

Carrier pipe will not be measured as it will be incidental to the casing pipe installation.

5.0 BASIS OF PAYMENT

A. General

1. Payment will be made at the unit and/or lump sum prices bid. The prices bid shall include and cover furnishing all labor, tools, equipment, and materials necessary to complete the work as shown and specified in strict accordance with the Contract Documents.

2. Payment will be made for contingent items when approved by the County.

3. Should a contractor elect to make a boring and/or jacking pipe under trees, sidewalks, curbs, pipelines, or similar obstructions that are not specifically noted as a boring and/or jacking operation in the Contract Documents it shall be done at no additional cost to the County.

B. Casing Pipe

Payment for bored and/or jacked casing pipe will be made per linear foot for the various diameters of casing pipe furnished and installed by boring and/or jacking. The price(s) bid shall include the traffic control, compaction, excavation, support, and restoration of the boring and receiving pits; removal and disposal of excess excavated material; dewatering, settlement monitoring; carrier pipe, fittings, jointing material, joint restraint, testing, disinfection (if applicable), and incidental items to complete the installation.

C. Carrier Pipe

Payment for bored and/or jacked carrier pipe will not be made as it will be incidental to the casing pipe installation.

SECTION 02310
DIRECTIONAL BORING OF PRESSURE SEWER

1.0 GENERAL

A. The pressure sewer shall be located within the easement and within 1 foot horizontally and within 2-inches vertically of the alignment shown on the contract plans and shall be installed by directional boring. Directional boring shall be conducted so as to minimize the number and size of excavation holes.

B. Operating Expertise

The Contractor or his Subcontractor must demonstrate expertise in trenchless methods by providing the County a list of ten utility references for whom similar work has been performed within the last three years prior to the pre-construction meeting. The references should include a name and telephone number where contact can be made to verify the contractor capability. The Contractor must provide documentation showing successful completion of the projects used for reference. The pre-construction meeting may not be scheduled until after the County approves of the above expertise. Conventional trenching experience will not be considered applicable.

C. Submittals

1. The Contractor shall submit technical data for equipment, method of installation, and proposed sequence of construction for approval by the County. The submittal shall include information pertaining to working and receiving shaft, dewatering, method of spoils removal, size and capacity of equipment capabilities for installing pipes on a curve, type of cutter head, drilling fluid type, method of monitoring line and grade, and detection of surface movement.

2. Prior to the pre-construction meeting and County approval to perform the directional boring, the Contractor must submit the names of supervisory field personnel and historical information of directional boring experience. In addition, the Contractor must submit for approval the name plate data for the drilling equipment and mobile spoils removal unit and MSDS information for the drilling slurry compounds.

D. Related Work Specified Elsewhere

1. Clearing and grubbing: Section 02110

2. Trench Excavation, Backfill and Compaction: Section 02250

3. Low Pressure Sewer: Section 02731

4. Sewage Grinder Pumping Units: Section 11307

E. Quality Assurance

The County will inspect all materials before, during and after installation to ensure compliance with the Contract Documents.

2.0 MATERIALS

A. Materials shall be in accordance with Section 02731.

3.0 EXECUTION

A. Installation

1. Unless otherwise prohibited by specific wetland permit requirements or otherwise shown on the construction drawings or specified, prior to installation, the entire drainage and utility easement and/or right-of-way shall be cleared and grubbed in accordance with Section 02110.

2. Installation shall be in trenchless manner producing a continuous bore. The number of access pits shall be kept to a minimum.

3. The drilling system shall be remotely steerable and permit electronic monitoring of tunnel depth and location. Accurate placement of pipe at up to eight feet deep, within a ± 2-inch window is required. The drilling device shall be capable of drilling a 90 degree, 35-foot radius curve.

4. The equipment must be capable of boring the following lengths in single bores, and successive boring pits will not be allowed to be any closer than the following distances:

Pipe Size	Boring Distance
1 in. to 1 ½ in.	400 feet
2 in. to 2 ½ in.	350 feet
3 in. to 6 in.	300 feet

5. Drilling must be performed by a fluid cutting process (high pressure/low volume), utilizing a liquid/clay slurry, i.e. bentonite. The clay slurry must be totally inert vacuum spoils recovery vehicle on site to remove the drilling spoils from the access pits. The spoils must then be transported from the job site and be properly disposed of. Under no circumstance will the drilling spoils be permitted to be disposed of into sanitary, storm, or other public or private drainage systems.

6. Mechanical, pneumatic, or water jetting methods will be considered unacceptable due to the possibility of surface subsidence.

7. Upon Owner request, the Contractor shall prove the accuracy of the electronic monitor every fifty (50) feet of directional bore in the presence of the Owner during directional drilling operations via test pit every 50' of bore. If the above accuracy is not met, the Contractor shall adjust or provide the necessary equipment which will meet the accuracy requirements. All such calibration costs shall be at no cost to the Owner.

8. After an initial bore has been completed, a reamer head shall be installed at the termination pit, and the pipe and reamer head shall be pulled back to the starting pit. The reamer must also be capable of discharging liquid clay to facilitate the installation of the pipe into a stabilized and lubricated tunnel. Reaming diameter shall not exceed 1.5 times the outside diameter of the pipe being installed.

9. The pipe being pulled into the tunnel will be protected and supported so that it moves freely and is not damaged by stones and debris on the ground during installation.

10. Pullback forces shall not exceed the manufacturers recommended allowable pulling force for the product pipe.

11. The Contractor shall allow sufficient lengths of pipe to extend past the termination point to allow connections to adjacent pipe sections. Pulled pipe shall be allowed a minimum of twenty-four (24) hours of stabilization prior to making tie-ins. The extra length of pipe shall be sufficient to make all necessary connections and tests.

12. Upon completion of boring and pipe installation, the Contractor will remove all spoils from the starting and termination pits. All pits will be compacted as per County and contract documents and be restored to their original condition.

B. Safety

1. Because the directional boring may encounter existing buried electrical lines, the following safety requirements must be met.

   a. All drilling equipment must have a permanent inherent alarm systemcapable of detecting an electrical current. The ground system shall be equipped with an audible alarm to warn the operator when the drill head nears electrified cable.

   b. All crews shall be provided with grounded safety mats, heavy gauge ground cables with connectors, and hot boots and gloves.

   c. All supervisory personnel must be adequately trained and have direct supervisory experience in directional boring.

C. Obstruction/Alignment

1. The bore shall not deviate from the horizontal alignment shown on the drawings by more than one (1) foot. If obstructions are encountered during the drilling operation, the Owner shall be notified immediately. With approval of the Owner, the Contractor shall attempt to go around the obstruction. If a deviation of more than three (3) feet from the horizontal alignment is required to bypass the obstruction, the Owner shall be immediately consulted to determine if adjustments in the alignment are required. At no time shall the alignment be allowed to exit the sewer easement or right-of-way. To prevent dips and high points in the pipeline profile, a vertical deviation in the pipeline profile may not exceed two (2) inches.

2. The Contractor shall employ all means necessary to complete the pipe installation as specified at no additional cost to the Owner. Any deviation from the previously approved means and methods shall be approved by the Owner prior to the implementation.

3. The Contractor shall mark the location and depth of the alignment with spray paint on paved surfaces and wooden stakes on non-paved surfaces at twenty-five (25) foot intervals. The Contractor shall record the depth of the sewer at the twenty-five (25) foot intervals and provide a copy of the record to the Owner upon completion of the installation of each bore. The Contractor shall measure or survey locations where the horizontal alignment deviates from the proposed alignment and incorporate the changes in the as-built drawings.

4. If the bore pipe installation has deviated beyond the specified tolerances, it shall be the Owners option to require the Contractor to abandon the bore, or remove the installed pipe, and rebore or reinstall the pipe on the correct alignment at no additional cost to the Owner.

D. Detection

1. Tracer Wire: All non-metalic pipe shall have tracer wire secured with duct tape to the top of the pipe. The wire shall be continuous for the full length of the pipeline. Underground splice connections shall be made with solderless split bolt connectors and taped to pipe.

2. Detector wire shall be terminated from each pipe run in each structure along the system, i.e. flushing connection vaults, air release vaults, service valve assembly vaults, etc. Allow adequate length of each wire in the structure, so it may be pulled one (1) foot out of the top of the structure for connection of detection equipment.

3. The detection wire shall be tested for continuity for each bored installation before acceptance by the Owner.

4. Detection tape is not required for pipe installed by directional boring.

4.0 METHOD OF MEASUREMENT

The amount of directional boring of pressure sewer shall be measured in accordance with Section 02731.

5.0 BASIS OF PAYMENT

Payment for directional boring of pressure sewer will not be made, as it shall be included in the unit price item for low pressure sewer Section 02731. Payment shall include clearing and grubbing.

This page has been intentionally left blank.

SECTION 02400
TUNNELING

1.0 GENERAL

A. Description

Tunneling shall include, but not necessarily be limited to, furnishing and installing tunnel liners beneath railways, roadways, or other locations indicated on the Plans and in accordance with the Contract Documents. The work consists of the furnishing of a trenchless installation which serves as a liner for utilities. The trenchless excavation shall be installed to the lines and grades shown on the construction drawings. The Contractor shall be responsible for selecting a method suitable for the conditions to be encountered and to assure no disturbance to the existing surface.

B. Related Work Include Elsewhere

1. Aggregate Backfill: Section 02240

2. Trench Excavation, Backfill, and Compaction: Section 02250

3. Water Mains: Section 02660

4. Gravity Sanitary Sewer and House Connections: Section 02700

5. Sanitary Sewer Force Mains: Section 02720

C. Quality Assurance

The County will inspect all materials before, during, and after installation to ensure compliance with the Contract Documents.

D. Railroad Crossings

No work shall begin without a fully executed Agreement between the County and the Railroad. The Contractor is required to read and adhere to all terms and conditions of the Agreement. The Contractor shall furnish and install all materials specified in the Agreement.

E. Design

The trenchless excavation method shall be designed for the earth, construction, and other loads present plus AASHTO HS25 Highway Live Load increased 30 percent for impact. If the tunnel crosses a railway, it shall meet the design standards of the Railway Company. The Contractor's engineer, or appropriate design professional, who must be registered in the State of Maryland, shall prepare the design for review by the Engineer. Steel Tunnel Liner Plates, if used, shall be designed in accordance with the latest edition of the Standard Specifications for Highway Bridges adopted by the American Association of State Highway and Transportation Officials. All design shall be in accordance with OSHA, MOSH and all federal, state and local regulations.

F. Working Drawings

The Contractor shall submit working drawings for review by the Engineer on the trenchless excavation method itself and on any required launching/jacking and receiving pits. The Working Drawings shall be signed and sealed by the Contractor's engineer, or appropriate design professional. The Contractor shall submit six copies of drawings showing typical sections and details of the trenchless excavation method to be used, and any grouting procedures. Working Drawings shall contain certification by the Contractor's engineer that the proposed trenchless excavation method and the proposed construction of any launching/jacking and receiving pits have been designed in accordance with these Specifications. County review of the working drawings shall not relieve the Contractor of the responsibility and liability for the adequacy and accuracy of the working drawings when implemented in the field.

G. Preconstruction Survey

The Contractor shall survey, photograph, and videotape all buildings, structures, and roadways within a horizontal distance of the centerline of the trenchless excavation that is three times the vertical distance from the invert of the trenchless excavation to the finished grade over the trenchless excavation. This survey shall be performed by a company that can show acceptable previous experience to the County. The Survey shall be prepared and submitted to the County and shall be sufficient to document the existing condition of any cracks, settlement, upheaval, spalls, or other existing deficiencies in existing buildings, structures, or roadways. If the trenchless excavation is under wetlands or other surface, the complete condition of the wetlands or other surface which is over the proposed trenchless excavation shall be documented. The Preconstruction Survey shall be submitted, reviewed, and approved by the County before any activity related to the trenchless excavation begins.

H. Submittals

The Contractor shall submit the following to the Engineer for review:

1. Working Drawings, Trenchless Excavation Plan, and Preconstruction Survey, describing in detail the proposed methods, procedures and the entire operation to be used, shall include but not be limited to the following:

General

a. size, capacity and arrangement of equipment
b. method of dewatering and drainage
c. method of ground stabilization and materials, if proposed, and evidence of experience and competency
d. method of detection of ground movement
e. method of monitoring and controlling line and grade

Tunneling

a. launching and receiving pits
b. method of excavation and removing soils materials
c. method of support of tunnel face and initial supports
d. method of erecting, placing and operating the tunnel shield
e. grout and concrete design mix specifications
f. method and procedure for the placement of gravel pack or grout between the tunnel liner plates and the excavation
g. method and procedure for installing the carrier pipe, and casing spacer/insulators, or supports and anchors, to prevent flotation and surge pressure buckling
h. method of bulkheading the tunnel ends

2. Certified test reports for liner plates and connectors, and shop drawings and specifications showing sizes, shapes, methods of attachment, connection details and grout hole details, shall be submitted for conformance with the specifications and approved by the Engineer before delivery of materials. Certifications for liner plates shall be in accordance with AASHTO M167, Paragraph 18.

3. Certified test reports for casing pipe, and shop drawings and specifications showing sizes, joint welds, and coatings, shall be submitted for conformance with the specifications and approved by the Engineer before delivery of materials.

2.0 MATERIALS

A. Materials Furnished by the County

The County will not furnish any materials for tunneling.

B. Contractor's Options

None.

C. Detailed Material Requirements

1. Portland Cement Concrete

Portland cement concrete for invert cradles shall be Mix No. 1 as specified in Section 03300.

2. Mortar for Grout

For filling voids outside the liner plate, the grout shall conform to the requirements of Section 04100 and the following. The mortar shall be composed on one (1) part Portland Cement (Type 1) and three (3) parts sand with only enough water to permit the material to flow properly. The grout shall remain fluid long enough to be injected through the lining and to fill the voids and shall set promptly enough to avoid grout flowing into the new annular space after the next advance.

3. Liner Plate

a. All materials shall be new and unused. Steel liner plates shall conform to the requirements of ASTM A569 and AASHTO M167. Steel liner plates shall have the minimum mechanical properties of flat plate before cold forming as follows:

Tensile strength	=	42,000 psi
Yield strength	=	28,000 psi
Elongation, 2 inches	=	30%

The liner plate thickness provided shall be no less than that shown in the Contract Documents. If the proposed tunneling method includes jacking operations, liner plate thickness shall be increased to withstand the jacking pressure to be imposed.

Tunnel liner plate segments shall be fabricated with such accuracy and uniformity in dimensions that segments shall be entirely interchangeable, not only with individual rings but with similar segments of other rings. All plates shall be punched for bolts on both longitudinal and circumferential seams and shall be so fabricated as to permit complete erection from the inside of the tunnel. In 2-flange plates, the longitudinal lapped seams shall have four bolts per foot. To provide four bolts per foot, holes along the edge of the plates that will form the longitudinal seams in the finished structure shall be staggered in rows two inches apart with holes in one row in the valleys and holes in the other row in the crests of the corrugations. The tolerance of hole diameter shall be plus or minus 0.02 inches. Liner plate grouting rings shall be located longitudinally at 48-inch or 54-inch intervals, depending on plate size. Liner plate grouting rings shall have a minimum of four grout holes in each grouting ring with one hole each at 2:00, 4:00, 8:00 and 10:00 positions. Grout holes shall be 1 ½ or 2-inch diameter pipe half couplings welded to the liner plate.

b. The liner plates shall be coated on both sides as follows:

1. Liner plates shall be hot-dipped galvanized using prime westerns spelter, or equal in accordance with AASHTO M167. In no case shall the coating application be less than 2 oz/sq.ft. Spelter coating shall be of first class commercial-quality, free from defects such as blisters, flux, and uncoated spots.

2. Liner plates shall be bituminous coated on all sides in accordance with AASHTO M190, Type A pipe.

c. Bolts and nuts used with 4-flange plates shall be not less than ½ inch in diameter for plate thicknesses less than or equal to 0.179 inch (7 gauge) and not less than 5/8 inch in diameter for plate thicknesses greater than 0.179 inch. Bolts shall have quick-acting course threads meeting the requirements of ASTM A307. Nuts shall have quick-acting course threads meeting the requirements of ASTM A307, grade A. Bolts and nuts shall be hot-dip galvanized in accordance with ASTM A153.

4. Carrier Pipe

Carrier pipe shall be as specified in the Contract Documents and meet the requirements specified in Sections 02660, 02700, or 02720 as appropriate.

5. Surface Settlement Markers

a. Surface settlement markers within pavement areas shall be P.K. nails.

b. Surface settlement markers within non-paved areas shall be wooden hubs.

6. Casing Spacer/Insulators

a. Casing spacer/insulators shall be fabricated items capable of providing position, support and separation of carrier pipes inside casing pipes. Spacer/insulators shall be virtually corrosion-proof and resistant to sodium chloride and acids.

b. Spacer/insulators shall provide the ability to position the carrier pipe within the casing. Unless otherwise approved by the Division of Water and Sewer, the concentric centering method shall be utilized. Spacer/insulators shall be capable of grade adjustment to position a gravity sewer to its required grade alignment within a casing pipe and to maintain the required carrier pipe alignment due to irregularities in the casing pipe alignment.

c. Spacing/insulators shall be injection molded high density virgin polyethylene or an ultra high molecular weight polymer. The carrier pipe shall be capable of sliding within the casing pipe with minimal pushing force. The bearing surfaces of runners shall have a high resistance to wear and abrasion, high impact strength, low deflection under compression, and low coefficient of friction.

3.0 EXECUTION

A. Line and Grade

The Contractor shall be responsible for extending the line, grade, and elevation in the tunnel/casing from the launching/jacking pit. The Contractor shall submit to the Engineer for approval the method it proposes to use for extending controls within the tunnel/casing. No work in these areas will be allowed to be performed prior to such approval. The Engineer may make periodic checks on the lines, grade elevation, etc., established by the Contractor. The Contractor shall maintain line and grade to within plus or minus 2 inches of that indicated on the Contract Documents.

B. Job Conditions

Blasting is prohibited without the explicit written approval of the County.

Tunneling, or jack and bore construction shall be performed so as not to interfere with, interrupt or endanger surface and activity thereon, and minimize subsidence of the surface, structures, and utilities above and in the vicinity of the casing pipe. Support the ground continuously in a manner that will prevent loss of ground and keep the perimeters and face of the casing pipe, passages and shafts stable. The Contractor shall be responsible for all settlement resulting from trenchless operations and shall repair and restore damaged property to its condition prior to being disturbed at no cost to the County or Owner of property or additional cost to the Contract.

The Contractor shall comply with applicable ordinances codes, statues, rules and regulations of the State of Maryland, MDSHA, applicable County building codes, and applicable regulations of the Federal Government, OSHA 29CFR 1926 and applicable criteria of ANSI A1O.16-81, “Safety Requirements for Construction of Tunnel Shafts and Caissons”.

C. Excavation Support Systems and Dewatering Systems

Excavation Support Systems and Dewatering Systems shall meet the requirements of Section 2250 of these Specifications, and the following:

1. Dewatering – When water is encountered, provide and maintain a dewatering system of sufficient capacity to remove water on a 24-hour basis keeping excavations free of water until the backfill operation is in progress. Dewatering shall be performed in such a manner that removal of soil particles is held to a minimum. Discharge from dewatering operations shall be directed into approved receiving basins in accordance with all applicable regulatory requirements. When dewatering, the Contractor shall maintain close observation of the highway or railroad to detect any settlement or displacement of the embankment, tracks or other facilities.

Methods of dewatering shall be at the option and responsibility of the Contractor with prior County approval. The Contractor shall maintain close observation to detect settlement or displacement of surface facilities due to dewatering. Should settlement or displacement be detected, the Contractor shall notify the Engineer immediately and take such action as necessary to maintain safe conditions and prevent damage.

2. Protection of Drainage Facilities – If it becomes necessary during construction to block a ditch, pipe or other drainage facility, the Contractor shall install temporary ditches, pipes or other drainage facilities to maintain adequate drainage as approved by the Engineer, or the property owner. The temporary facilities shall be removed and the permanent facilities restored upon completion of the work.

   The Contractor shall use soil erosion attenuation methods and materials to protect ditches and other drainage facilities during construction.

3. Construction of Launching and Receiving Pits – Design, construction, maintenance and removal, including any damage attributed to the construction of launching and receiving pits, is the responsibility of the Contractor.

   Launching and receiving pits shall be constructed in accordance with approved working drawings sealed by a professional engineer registered in the State of Maryland.

   Excavation, backfill and grading shall be performed in accordance with Section 2250 of these Specifications and to the requirements specified herein.

   The Contractor is responsible for any necessary utility relocations or the supporting of utilities for launching/jacking and receiving pits during construction. Utility support and relocations, for those utilities shown on the construction drawings, shall be at no additional cost to the County.

D. Ground Movement Monitoring

The Contractor shall carry out operations to minimize horizontal displacement, settlement and/or heave of the ground, and shall be responsible for all damage due to displacement, settlement consolidation or heave from any construction related activities.

No horizontal displacement, settlement or heave will be permitted at property structures.

The Contractor shall install and maintain a system of instrumentation to monitor the underground excavation operation and to detect movement in the soil, adjacent structures and utilities.

Installation of the instrumentation by the Contractor shall not preclude the Engineer, through an independent Contractor or consultant, from installing instrumentation to monitor ground movement in or adjacent to the construction work.

Survey benchmarks used for ground movement monitoring shall be a sufficient distance away from the construction to avoid errors in readings due to ground movement.

The Contractor shall cooperate fully with the agency which has rights to the right-of-way. Settlement detected shall be corrected by the Contractor at no additional cost to the Contract.

The contractor shall report any settlement and horizontal movement immediately to the Engineer and take immediate remedial action, at no additional cost to the Contract.

In the event of movement of the ground surface, structure or utility being detected or damage recorded, the Engineer may order that the work be stopped and secured. Before proceeding, the contractor shall correct any problems causing or resulting from such movement at no additional cost to the Contract. If ground settlement or heave occurs which might affect the accuracy of temporary or permanent benchmarks, it is the Contractor's responsibility to monitor and report such movements to the Engineer.

E. Power Supply

Provide temporary electric lights to properly and safely illuminate all parts of the tunnel construction area including special illumination at the working face. Lighting circuits shall be thoroughly insulated and separated from power circuits, and lights shall be enclosed in wire cages. The Contractor shall secure all necessary electrical permits to prosecute the Work.

Power machinery and tools within the tunnel shall be operated by either electricity, compressed air, diesel with approved scrubber or other approved power. Electrical tools and equipment shall be grounds in accordance with the latest requirements of the National Electrical Code.

F. Ventilation and Air Quality

The Contractor shall provide, operate, and maintain for the duration of the trenchless project a ventilation system suitable for meeting applicable local, state and federal safety requirements for the health of the workers.

G. Tunneling Operations

Tunneling equipment shall be of U.S. Bureau of Mines approved types.

The tunnel face shall be controlled using such support procedures as breasting, poling plates, face jacks, sliding tables, either singly or in combination, spaced as required.

Excavate in such a manner that voids behind liner plates are held to a minimum. immediately after each increment of excavation, install one ring of liner plates. Completely fill voids with grout, or gravel pack followed by grout, placed under pressure as specified in this Section.

The use of water or other liquids to facilitate liner plate installation and/or spoil removal is prohibited.

Whenever the tunneling operation is suspended, the face or heading shall be completely bulkheaded or supported by positive means and all completed liner plate rings shall be grouted. The dewatering system shall remain operating. Qualified personnel shall periodically check conditions that might threaten the stability of the work.

Spoil from the work shall be disposed of off-site at a permitted facility or location.

1. Tunnel Shield – The shield shall be of steel construction, designed to support railroad loading in addition to the other loadings that it must sustain. The advancing face shall be provided with a hood extending no less than twenty (20) inches beyond the face, and extending around no less than the upper 240° of the total circumference. It shall be of sufficient length to permit the installation of at least one complete ring of liner plates within the shield before it is advanced for the installation of the next ring of liner plates. The shield shall conform to, and not exceed, the outside diameter of the liner plate tunnel being installed by more than one (1) inch at any point on its periphery unless otherwise approved by the Engineer.

   The shield shall be adequately braced and provided with the necessary appurtenances for completely bulkheading the face with horizontal breast boards, and arranged so that the excavation can be benched as necessary. Excavation shall not be advanced beyond the edge of the hood, except in rock.

2. Installation of Tunnel Lining – The Contractor shall construct tunnel to the line and grade shown on the Contract Documents.

   The inside dimensions of the tunnel liner plate ring, measured along the diameter at any location, shall not vary more than three percent of the liner plate diameter.

   Liner plates shall be installed in a manner that will not damage the liner plates or coating. Damaged liner plates shall be replaced at no additional cost to the Contract. Coating damage shall be repaired to the satisfaction of the Engineer.

   Flanges which will be in contact with each other shall be cleaned of foreign matter, taking care not to damage the coating in the cleaning process. Such surfaces shall be free from material that could interfere with proper bearing and water tightness.

   Bolt liner plates in accordance with liner plate manufacturer's recommendations. Retighten or replace bolts as required.

3. Grouting – Cement grout shall be placed under pressure through the grout holes to fill any voids that exist between the liner plates and the undisturbed earth.

   Grouting shall be kept as close to the heading as possible, using grout stops behind the liner plates, if necessary. In no case shall more than six (6) lineal feet of tunnel be progressed beyond the grouting. Grouting shall be done:

a. At more frequent intervals than six (6) feet if conditions warrant;

b. At the end of the work shift, or when work is interrupted for any reason; or

c. Progressively with each adjacent set of grout holes.

In general, grouting shall proceed progressively upward from the lowest grout holes of each ring. When going from lower to higher grout holes, do not make connection to the higher holes until grout has completely filled the space below. Continue grouting until grout appears in the next set of grout holes, which shall be kept open during grouting to permit escape of air and water.

A threaded plug shall be installed in each grout hole as the grouting is completed at that hole.

The grout pump and injection system shall be of a type that will deliver the grout in a smooth even flow without surge. The grouting circuit shall contain a return line to allow return of the grout from the nozzle to the supply tanks. The grouting equipment shall be capable of development a uniform pressure at the grout hole connection sufficient to fill voids without disturbing the liner plates, adjacent utilities, structures or roadways. The equipment shall be equipped with hoses having a minimum inside diameter of 1 ½ inches and have a minimum capacity of ½ cubic yard per minute.

5. Placement of Invert Concrete – Place concrete fill in invert of tunnels even with edges of liner plate flanges, and to the limits shown on the Contract Documents, to facilitate skidding carrier pipe into tunnel. Concrete fill shall not be poured as a level floor.

4.0 METHOD OF MEASUREMENT

A. Tunneling

Measurement for earth tunneling and liners will be made horizontally along the centerline of the tunnel satisfactorily installed between the ends of the tunnel.

B. Carrier Pipe

Carrier pipe will not be measured as it will be incidental to the tunnel liner installation.

5.0 BASIS OF PAYMENT

A. General

1. Payment will be made at the unit and/or lump sum price bid. The price bid shall include and cover furnishing all labor, tools, equipment, and materials necessary to complete the work as shown and specified in strict accordance with the Contract Documents.

2. Payment will be made for contingent items when approved by the County.

3. Should a contractor elect to install a tunnel in lieu of a bore and jack under roads trees, sidewalks, curbs, pipelines, or similar obstructions that are not specifically noted as a tunneling operation in the Contract Documents it shall be done at no additional cost to the County.

B. Liner Plate

Payment for liner plate will be made per linear foot for the various diameters of liner plate furnished and installed by the tunneling operations. The price(s) bid shall include the traffic control, excavation, support, grouting, backfill, compaction, and restoration; removal and disposal of excess excavated material; dewatering, settlement monitoring; furnishing and placing grout within the tunnel liner plate; carrier pipe, fittings, jointing material, joint restraint, testing, disinfection (if applicable), and incidental items to complete the installation.

C. Carrier Pipe

Payment for carrier pipe will not be made as it will be incidental to the tunnel installation.

This page has been intentionally left blank.

SECTION 02660
WATER MAINS

1.0 GENERAL

A. Description

Water main installation shall include, but not necessarily be limited to, furnishing and installing water pipe, fittings, and appurtenances of the size and type shown on the Plans, installed on a firm foundation true to line and grade in accordance with the Contract Documents.

B. Related Work Specified Elsewhere

1. Trench Excavation, Backfill, and Compaction: Section 02250
2. Water Valves and Appurtenances: Section 02662
3. Water Services and Appurtenances: Section 02664
4. Fire Hydrants: Section 02666
5. Cast-In-Place Concrete: Section 03300
6. Miscellaneous Metals: Section 05500

C. Quality Assurance

The County will inspect all materials before, during and after installation to ensure compliance with the Contract Documents.

2.0 MATERIALS

A. General

1. Materials shall be furnished in accordance with the Contract Documents and the current edition of the Approved List of Suppliers and Materials for Water and Sewer Main Construction.
2. To minimize the number of joints, only standard manufacturers length of pipe shall be furnished and installed for all water mains unless otherwise indicated on the Plans, or as approved by the County.

B. Pipe Symbols

For convenience and standardization, the various types of pipe are designated on the plans by the following symbols:

DIP - Ductile Iron Pipe

PVC - Polyvinyl Chloride Pipe

C. Materials Furnished by the County

1. The County will not furnish any materials for water main construction.

2. Unless otherwise noted in the "Special Provisions," the County will make water available from its potable water system for pipeline testing at no charge to the Contractor for one attempt at a test cycle. Test cycle shall include initial flushing, filling, chlorination, hydrostatic testing, and flushing with dechlorination. If any portion of the cycle fails, the Contractor will be responsible for water. The Contractor shall contact the Division of Water and Sewer to coordinate its use. If subsequent testing is required, the Contractor shall purchase additional water from the County's system.

D. Contractor's Options

1. The Contractor may furnish Polyvinyl chloride plastic water pipe (PVC) and compatible specified fittings for water mains equal to or smaller than 12-inches in diameter unless specified otherwise by the County.

2. The Contractor may furnish ductile iron pipe (DIP) and compatible specified fittings for water mains 3-inches in diameter and greater unless specified otherwise by the County.

E. Detailed Material Requirements

1. Portland cement concrete for pipe fitting buttresses and anchorages shall be as specified in Section 03300.

2. Polyvinyl Chloride Plastic Water Pipe 4 inch through 12 inch shall be Class 200 (DR14) and shall meet the requirements of AWWA C900. PVC Water Pipe 3 inch and smaller shall be PVC 1120 (SDR21) and shall meet the requirements of ASTM D 2241. The outside diameters of DR14 shall be equivalent to cast-iron pipe. PVC Water Pipe shall have an integral bell with a rubber gasketed joint as listed in the AWWA C900 standard. Pipe and couplings shall be marked and factory tested in accordance with AWWA C900.

3. Ductile Iron Pipe and Fittings

a. Pipe

i. Pipe shall be designed and manufactured in accordance with ANSI/AWWA C151/A21.51 unless directed in writing by the County.

ii. All pipe and fittings shall be designed and constructed to withstand all external pressure caused by overburden as indicated on the profile and traffic loads to which the pipe may be subjected.

iii. Pipe shall be double thickness cement mortar lined in accordance with AWWA C104 with an interior seal coat of bituminous material.

The outside surface shall also be bituminous coated.

iv. The minimum special standard thickness class shall be as noted herein or as shown on the plans or specified in the "Special Provisions".

Size (In.)	Class	Max. Cover (Ft.)
3	52	100+
4	52	100+
6	52	86
8	52	49
10	52	38
12	52	33
14	52	24
16	52	21
20	52	18
24	52	17
30	52	14
36	52	13
42	52	13
48	52	12
54	52	12

b. Joints

Joints may be mechanical or rubber gasketed push-on type. Unless otherwise noted, all joints shall be in accordance with ANSI/AWWA C111/A21.11 Standard.

c. Fittings

i. All fittings shall have mechanical joints.

ii. All fittings 3-inches through 24-inches shall be manufactured in accordance with the ANSI/AWWA C153/A21.53 Standard. All fittings 30-inches through 48-inches shall be manufactured in accordance with the ANSI/AWWA C110/A21.10 standard for a working pressure of 250 psi unless specified or directed otherwise by the County.

4. Joint Restraint

a. Restrained joint pipe and fittings shall be of the pipe manufacturer's standard design for ductile iron, and fittings.

b. Mechanical joint restraining systems for ductile iron pipe may be used at fittings, valves, fire hydrant leads, vault bypasses and when connecting to existing utilities unless noted otherwise by the Water and Sewer Engineering office. The mechanical joint restraint shall be incorporated in the design of the follower gland and shall include a restraining mechanism which when actuated imparts multiple wedging action

against the pipe, increasing its resistance as the pressure increases. Flexibility of the joint shall be maintained after burial. Glands shall be manufactured of ductile iron conforming to ASTM A 536-80. Restraining devices shall be of ductile iron heat treated to a minimum hardness of 370 BHN. Dimensions of the gland shall be such that it can be used with the standardized mechanical joint bell and tee-head bolts conforming to ANSI/AWWA A21.11 and ANSI/AWWA C153/A21.53 of the latest revision. Twist-off nuts shall be used to insure proper actuating of the restraining devices. The 3 inch through 16 inch mechanical joint restraining device shall have a working pressure of at least 350 psi with a minimum safety factor of 2:1. The 18 inch through 48 inch mechanical joint restraining device shall have a working pressure of at least 250 psi with a minimum safety factor of 2:1. Restrained joints on straight lengths of pipe shall be as manufactured by the pipe manufacturer and the restraining mechanisms shall be an integral part of the bell and spigot.

c. Rod for tie rod assemblies shall meet the material requirements of ASTM A 193, Grade B7, and shall be threaded for at least 4 inches on both ends. Rod shall be 3/4 inch diameter unless otherwise noted. Nuts shall meet the requirements of ASTM A 194. Manufactured tie rod and accessories shall result in the completed restrained joint assembly having a minimum working pressure rating of 200 psi.

5. Detector Tape

Visual Detection Tape shall be 3 inches wide (minimum) nonmetallic blue plastic tape lettered "water" in black graphics.

6. Tracer Wire for Non Metallic Pipelines

Tracer wire shall be 8 gage, 7 strand continuous copper wire with a 45 mil polyethylene insulation. The wire shall be blue, have “UL” markings and suitable for direct bury applications. All underground splicing shall be with butt splice connectors and shrink tubing or split bolt connections with a water proof binder and underground electrical tape.

7. Continuity Test Station

a. The continuity test station aside a fire hydrant shall be a 2 1/2" shaft cathodic test box constructed of ABS plastic with cast iron rim and lid. The minimum box length shall be 24" and the body shall be flared or squared at the base to prevent pull out or settling. Lid shall be locking, blue in color and have raised custom lettering noting Atest@. Test station shall be complete with an inset removable terminal board with three (3) teminals.

b. The continuity test station that is located over the water main shall be a 4 1/4" valve box with blue locking lid. Test station shall be complete with an inset removable terminal board with three (3) terminals.

3.0 EXECUTION

A. Preparation

1. Trench excavation, backfill, and compaction, and pipe bedding and haunching shall be as specified in Section 02250.

2. Prior to start of utility installation, all rights-of-way shall be graded to within +/- 0.2 feet of the proposed subgrade in paved areas and finished grade in unpaved areas.

3. Trench Water: The pipeline trench excavation shall be dewatered sufficiently to allow pipe joints to be made under dry conditions. No joint shall be made under water.

4. Laying Pipe in Freezing Weather: No pipe shall be laid upon a foundation into which frost has penetrated, nor at any time when there is danger of ice formation or frost penetration at the bottom of the excavation. In freezing weather, open trench length shall be kept to a minimum and the excavation promptly backfilled after the pipe has been installed.

5. Pipe Bedding: Each pipe shall be bedded on a solid foundation acceptable to the County and in accordance with the Standard Details. Bedding shall be installed to insure that joints are properly made and the pipe is firmly supported the full length of the barrel. Aggregate bedding shall be installed to grade prior to laying pipe.

B. Pipe Installation

1. All pipe shall be installed in accordance with the approved manufacturers written instructions, Harford County Standards, and as specified herein. These recommendations, if more restrictive than that shown in the Standard Details shall include: maximum trench width, bedding requirements, backfill material, and compaction, where applicable. In addition, the following shall apply unless otherwise noted:

   a. Polyvinyl chloride water pipe (PVC) shall be installed in accordance with the Standard Details and the recommendations of Uni-Bell.

   b. Ductile iron pipe (DIP) shall be installed in accordance with the Standard Details and the recommendations of the Ductile Iron Pipe Research Association.

2. Equipment for Handling Pipe: Proper and suitable tools and appliances as approved for safe and convenient handling and joining of pipes shall be used.

3. Pipe Installation: Pipe shall be carefully handled and lowered into the trench. Pipe shall be installed with special care to insure that each joint is watertight, has met the required manufacturers insertion depth, and has no shoulder or unevenness of any kind along the inside of the pipeline. No wedging or blocking will be permitted in installing any pipe unless directed by

written order or permission in writing is obtained from the County.

4. Pipe Setting and Protection: No pipe shall be brought into position until the preceding length has been thoroughly bedded and secured in place. Care shall be used to assure water tightness and prevent damage to, or disturbing of, the joints during the refilling process. After pipes have been installed and joints have been made, there shall be no walking on or working over the pipe, except as may be necessary in tamping the backfill material, until the backfill is at least 2 feet over the top of the pipe.

5. Cleaning Pipe: The pipes shall be thoroughly cleaned before being installed and shall be kept clean until acceptance of the completed work. Open ends of all pipelines shall be provided with a stopper carefully fitted to keep dirt and other substances from entering. This stopper shall remain in place at all times when installation is not in progress.

6. Cutting Pipe: Whenever a pipe requires cutting, to fit into the line or bring it to the required location, the work shall be performed by an approved method that leaves a smooth, square end. Cut PVC pipe ends shall have burrs removed and the end beveled to match factory bevel. Field spigots shall be stop-marked with a felt tip marker or wax crayon for the proper length of assembly insertion.

7. Jointing Pipe

   a. General

      Before any joints are made in the trench, the Contractor shall demonstrate to the County by making a sample joint that methods he will employ conform with the Specifications, will secure a watertight joint, and that the workmen whom he intends to use for this work are familiar with the requirements for making proper joints.

   b. Push-On Gasketed Joints

      Prior to making gasketed joints, both mating pipe ends and the gasket shall be cleaned of all foreign material. The gasket shall then be inserted in or stretched over the cleaned gasket seat and lubricant applied as recommended by the manufacturer and approved by the County. The pipe ends shall be carefully aligned and pushed together to meet the required manufacturer's insertion depth. There shall be no shoulder or unevenness of any kind along the inside of the pipeline. In all cases, the spigot shall be inserted into the previously laid and seated bell, in order to minimize the potential of gasket roll, to prevent the bell dragging and pushing soil into the joint, and to prevent the need to undercut the pipe to lay the bell.

c. Mechanical Joints

Mechanical joints shall be joined in accordance with the manufacturers recommendations as approved by the County. All nuts shall be tightened uniformly with a torque of not less than 75 or more than 90 foot-pounds.

d. Other methods of jointing pipe will be given consideration by the County, provided the Contractor furnishes evidence that the proposed method is equal to or better than the specified methods, and further, provided that the proposed method has been successfully used and that the joint has previously been manufactured by the company from whom the Contractor proposes to purchase pipe.

e. All jointing material and workmanship shall be in accordance with the manufacturer's recommendations as approved by the County.

8. Tracer Wire: All non-metallic water mains shall have tracer wire secured with duct tape to the top of the pipe at ten (10) foot centers. The tracer wire shall be continuous for the full length of the pipeline. Continuous conductivity shall be maintained and tested. Underground splice connections shall be made with solderless split bolt connectors and taped to pipe.

9. Detector Tape: Install visual detection tape 18 inches above all mains.

10. Restrained joints and joint restraint systems shall be assembled in accordance with the manufacturer's recommendations. Tie rod nuts shall be uniformly tightened and double nutted to prevent movement . Joint restraint systems shall be field protective coated with two coats of a bituminous coating after assembly.

11. Connections to existing work shall be made by the Contractor in the presence of the County at such a time and in such manner as directed and approved by the County. The Contractor shall notify the consumers in the area to be affected by the shut-off a minimum of 3 working days prior to the work. Notification shall include at a minimum knocking on all doors and placing type-written flyers in doorways. All valves necessary for making connections will be operated by the County. The Contractor shall complete the connections with the greatest possible speed and all work shall proceed without interruption until the existing system is returned to operation, so that the public will be inconvenienced as little as possible.

12. Buttresses and anchors shall be installed at all caps, horizontal bends, tees, branches and vertical bends as required in the Contract Documents, Standard Details, and as directed by the County.

C. Field Tests

1. General

a. All portions of water mains and appurtenances shall be tested prior to

connection to the existing water system. The County shall have the final decision as to the methods used.

b. During installation water mains will be visually inspected for compliance with these specifications and the contract documents by the County with the assistance of the Contractor. Further inspections and tests will be conducted by both parties after the section of pipeline being inspected and tested has been backfilled and has had ample time for the curing of buttresses.

c. The Contractor shall schedule all tests with the County at least 2 County working days in advance of the test, and shall conduct all tests in the presence of the County. On County Capital Projects, the County will witness one test at no cost to the Contractor. Should the pipeline fail the first County witnessed test, the Contractor shall reimburse the County for all costs resulting from such additional tests so required until the pipeline passes the test(s). The Contractor shall also reimburse the County for the cost of inspection if the Contractor is not prepared for any test, or for additional tests required.

d. Prior to performing any test and filling operations, the pipeline shall be flushed free of all debris, silt, earth, gravel, rock or other foreign material. It shall be done in a manner to prevent debris or flushing water from entering the existing water mains.

e. Any defective work which shows up while conducting tests shall be replaced or repaired as approved by the County by the Contractor at his expense.

f. Water mains shall be tested in sections dictated by the operational breaks noted on the Contract Documents or as approved by the County.

g. No water mains shall be connected to existing mains, except through 3/4" loading line, at any point until they have been tested and chlorinated.

h. All stub valves shall be open and testing will be through caps or blow-offs at buttress.

i. After these tests have passed, the Contractor will drain the line and connect to existing mains.

j. After tying into existing mains the Contractor will refill and flush the lines and a representative of the County Water and Sewer Maintenance Department will check to see that the chlorine residual is back to acceptable levels before any water services are installed.

k. Once the line is permanently tied into the County system the line shall remain charged unless directed otherwise by the County.

l. Chlorination, testing and dechlorination is required to be performed by a professional chlorination and testing company which has received prior

written approval by the Division of Water and Sewer Maintenance Department.

m. All water used for testing procedures must be accounted for and documented by the Contractor. Certification reports prepared by the testing company shall be provided to the maintenance department and along with pipe size, length, and number of times pipe was filled to the maintenance department prior to the permanent tie-in.

2. Disinfection and Hydrostatic Testing Procedures

a. General

i. When mains are completed, they shall be flushed, chlorinated, tested and dechlorinated. Chlorination and hydrostatic testing is performed simultaneously. The Contractor shall furnish all labor, tools, materials, and equipment necessary to perform the procedures specified.

ii. Testing and tieing-in will be coordinated through the Resident County Inspector on the job. Under no circumstances will any existing valves or fire hydrants be operated by the Contractor without prior approval of the Resident County Inspector, and the Water and Sewer Maintenance Department.

iii. The section of water main being tested shall be filled from an existing fire hydrant or main as designated by the County. The Contractor shall furnish an approved backflow preventer and meter at the point of supply. When charging and testing water mains which are not sufficiently close to existing water mains, the Contractor may use an approved and sanitized potable water truck to haul water from an existing water main as pre-approved by the Water and Sewer Maintenance Department.

b. Initial Flushing

i. Prior to the simultaneous chlorination and hydrostatic testing, the Contractor shall flush the water main from all debris and particulate matter adhering to the pipe interior with a minimum scouring velocity of 2.5 feet per second in accordance with AWWA C651. The purpose of this initial flush is to eliminate foreign matter which may significantly reduce the effectiveness of the disinfectant. The following table presents the flow rates necessary to properly flush the main.

Pipe Diameter (inches)	Minimum Flow Rate (gallons per minute)	Flushing duration per every 100 ft. of pipe (seconds)
4	100	40
6	200	40
8	400	40
12	900	40

16	1,600	40
20	2,200	40
24	3,200	40
30	4,800	40
36	7,200	40

The Contractor shall measure and County shall witness the flow rate provided using his meter to ensure the minimum rate has been achieved.

ii. The Contractor shall provide the County Inspector a minimum of 1 working day advanced written notice of flushing. The Contractor shall provide the County Inspector with size and linear feet of pipe, proposed discharge point, diameter of drain (if applicable), chlorine concentration, time and date flushing will commence, and anticipated time duration of flushing. The County Inspector will in-turn notify the Division of Water and Sewer Maintenance Superintendent.

c. Disinfection and Hydrostatic Testing

i. Following the initial flush, the testing company shall simultaneously disinfect and hydrostatically test the main.

ii. Disinfection – Continuous Feed Method

(a) The continuous feed method, in accordance with AWWA C651, may be utilized for disinfection and as specified herein.

(b) Approved forms of chlorine include liquid or gaseous chlorine, sodium hypochlorite solution, and calcium hypochlorite.

(c) At a cap and fill pipe in the new main, the water and chlorine solution shall be introduced at a constant rate to provide a uniform minimum concentration of 25 ppm available free chlorine. Air within the line shall be fully evacuated in the filling process.

(d) The following table from AWWA C651 provides a reference for the amount of chlorine required to achieve the minimum chlorine dosage.

Chlorine required to produce minimum 25 ppm concentration in 100 feet of pipe

Pipe Diameter (inches)	100% Chlorine (pounds)	1% Chlorine Solution (gallons)
4	0.13	0.16
6	0.30	0.36
8	0.54	0.65
12	1.20	1.44
16	2.17	2.60
20	3.42	4.21
24	4.80	5.91

Note: Solutions of 1 percent chlorine shall be prepared with sodium hypochlorite or calcium hypochlorite. Sodium hypochlorite requires 1 lb. of chlorine with 8 gallons of water.

(e) The chlorine residual shall be tested by the testing company and verified by Harford County no less than 24 hours after the main was completely full of chlorinated water. Valves and fire hydrants shall be operated to ensure full contact with the chlorinated solution, during the filling operations.

iii. Disinfection – Slug Method (Superchlorination Method)

(a) The slug method, in accordance with AWWA C651, may be utilized for disinfection

(b) Approved forms of chlorine include liquid or gaseous chlorine, sodium hypochlorite solution, and calcium hypochlorite.

(c) At a cap and fill pipe in the new main, the water and chlorine solution shall be introduced at a constant rate such that the water will not have less than 100 ppm free chlorine. Air within the line shall be fully evacuated in the filling process.

(d) The chlorine residual shall be tested by the testing company and verified by Harford County no less than 3 hours after the main was completely full of chlorinated water. Valves and fire hydrants shall be operated to ensure full contact with the chlorinated solution, during the filling operations.

iv. Hydrostatic Testing

(a) Hydrostatic testing shall be performed in accordance with AWWA C600.

(b) After filling the main during the disinfection process, the main

shall be hydrostatic tested by piping potable water into the main up to 200 psi measured at the highest elevation of the main in accordance with the pipeline profile shown on the contract documents. If pressure readings cannot be taken at the highest elevation, the pressure shall be increased to accommodate the difference between the highest elevation and test elevation. An additional 0.43 psi shall be added to every additional foot in elevation change.

(c) The test pressure shall be maintained and shall not drop for a minimum fifteen (15) minutes.

(d) If the test did not pass, the Contractor shall remedy such defects and repeat the disinfection and hydrostatic test until approved by the County at the Contractor's expense for additional water.

(e) Hydrostatic testing against closed valves is prohibited.

d. Final Flushing

Upon completion of the disinfection and hydrostatic testing, the main shall be flushed to remove the chlorinated water. Flushing procedures shall be as follows:

i. The Contractor shall provide the County Inspector a minimum of 1 working day advanced written notice of flushing. The Contractor shall provide the County Inspector with size and linear feet of pipe, proposed discharge point, diameter of drain (if applicable), chlorine concentration, time and date flushing will commence, and anticipated time duration of flushing. The County Inspector will in-turn notify the Division of Water and Sewer Maintenance Superintendent.

ii. The discharge of chlorinated or dechlorinated water into the wastewater collection system is strictly prohibited.

iii. In accordance with the Maryland Code of Regulations, the discharge of chlorinated water onto the ground surface or into storm drains is prohibited. In such cases, the water shall first be dechlorinated to achieve no more than 0.1 ppm free chlorine residual before disposal.

iv. The main shall be considered flushed once the free chlorine residual has matched the chlorine residual in the water main from which the flushed water originated.

e. Bacteriological Testing

i. After final flushing, but before the main is tied into the existing system bacteriological tests shall be performed. The Contractor shall obtain the services of a Maryland-Certified water testing company to perform bacteriological testing. All test samples shall be collected in the presence of the Division of Water and Sewer

Maintenance personnel. A minimum 2-working day, advanced notification shall be made to the Maintenance office. Bacteriological tests shall be performed in accordance with AWWA C651 and as specified herein. Prior to testing the free chlorine residual shall be between 0.5 mg/l and 1.5 mg/l.

ii. Two consecutive sets of acceptable samples, taken at least 24 hours apart shall be collected.

iii. At a minimum, one set of samples shall be taken at the beginning of the main, one set every 1200 feet, one set at every branch, and one set at the end of the main.

iv. A technician employed by the certified testing company shall collect all samples no less than 24 hours after the final flush. Samples shall be taken from a corporation stop with a copper-tube gooseneck assembly located at or near the end of the main. A blow-off drain, if provided as part of the testing apparatus may also be utilized. Samples may not be taken from fire hydrants.

v. Samples shall be tested by the certified testing company for bacteriological quality in accordance with "The Standard Methods for the Examination of Water and Wastewater".

vi. The sample results must be submitted to the Water and Sewer Maintenance Department within 24-hours of receipt. These results shall indicate free chlorine residual, concentration, the presence or absence of coliform organisms and a standard plate count. The samples shall pass if there is no presence of coliform organisms and the plate count is 500 cfu per ml or less.

vii. If acceptable, the main may be put into service.

viii. If the results are not acceptable, the main shall be flushed and re-sampled. If the results of the second sampling are not acceptable, the Contractor shall repeat the disinfection and final flushing procedures and re-test for bacteriological quality until two consecutive successful tests taken at least 24 hours apart have been performed.

f. Hydrostatic Testing

These results must be submitted to the Water and Sewer Maintenance Department within 24 hours of receipt.

g. Continuity Testing for Non-Metallic Pipe

i. After backfilling, the County shall test at the Contractor's/Developer's expense, the tracer wire to demonstrate electrical continuity between valve boxes and through the length of the non-metallic pipeline installed. The Contractor shall schedule all tests with the County at least 48 hours in advance. Any discontinuity shall be located,

repaired, and retested at the Contractor's expense until continuity is demonstrated.

ii. On Capital Projects, the County will perform one continuity test at no cost to the Contractor. Should the continuity test fail, the Contractor shall reimburse the County for all costs resulting from such additional test so required until the continuity test passes.

4.0 METHOD OF MEASUREMENT

A. Water Mains

Measurement for furnishing and installing water mains will be made horizontally along the center line of the pipe for each size and type of pipe without deduction for fittings or valves less than 8-inches in diameter.

B. Fire Hydrant Leads

Measurement for furnishing and installing fire hydrant leads will not be made as it will be incidental to fire hydrant installation.

5.0 BASIS OF PAYMENT

A. General

1. Payment will be made at the unit and/or lump sum prices bid. The prices bid shall include and cover furnishing all labor, tools, equipment, and materials necessary to complete the work as shown and specified in strict accordance with the Contract Documents.

2. The prices bid for furnishing and installing water mains shall include the following:

   a. Trench excavation, backfill, compaction, and incidental items as specified in Section 02250.

   b. Furnishing and installing granular pipe bedding materials and concrete for pipe fitting anchorages and buttresses as shown on the Standard Details and as required elsewhere in the Contract Documents.

   c. Furnishing and installing restrained joints and/or joint restraint systems where required by the Contract Documents.

3. Payment will be made for contingent items when approved by the County.

B. Water Mains

Payment for furnishing and installing water mains, complete and in place, will be made per linear foot of the size and type of pipe installed and/or lump sum price bid. The price(s) bid shall include traffic control, furnishing and installing all pipe valves (less than 8-inches in diameter), fittings, jointing materials, tracer wire and test

stations where required, and buttresses, providing an approved spoil site, and disposing of all spoil or excess materials; bedding materials between top of pipe and subgrade, all environmental and erosion or sediment control work including off-site requirements at spoil storage or borrow sites; restoration of all disturbed areas, removing existing buttresses when necessary, and connecting to existing pipelines, structures; testing and disinfecting the water main, and incidental items to complete the water main.

C. Fire Hydrant Leads

Payment for furnishing and installing fire hydrant leads, will not be made as it will be incidental to fire hydrant installation.

D. Valves and Fire Hydrants

Payment for furnishing and installing valves and fire hydrants will be made as specified in Section 02662 and Section 02666.

This page has been intentionally left blank.

SECTION 02662
WATER VALVES AND APPURTENANCES

1.0 GENERAL

A. Description

Water valve and appurtenance installation shall include, but not necessarily be limited to, furnishing and installing gate, butterfly, air release, vacuum, combination air valves or assemblies with appurtenant valve vaults, roadway valve boxes and accessories in accordance with the Contract Documents.

B. Related Work Included Elsewhere

1. Trench Excavation, Backfill, and Compaction: Section 02250

2. Water Mains: Section 02660

3. Cast-In-Place Concrete: Section 03300

4. Precast Concrete: Section 03400

5. Brickwork, Unit Masonry: Section 04200

6. Miscellaneous Metals: Section 05500

C. Quality Assurance

The County will inspect all materials before, during and after installation to insure compliance with the Contract Documents.

2.0 MATERIALS

A. General

Materials shall be furnished in accordance with the Contract Documents and the current edition of the Approved List of Suppliers and Materials for Water and Sewer Main Construction.

B. Materials Furnished by the County

The County will not furnish any water valves or appurtenances.

C. Contractor's Options

None

D. Detailed Material Requirements

1. Aggregate for bedding, leveling, and drainage shall meet the gradation requirements of AASHTO M 43, Size Number 57.

2. Water mains and appurtenances shall be as specified in Section 02660.

3. Tapping saddles and corporation stops shall be as specified in Section 02664.

4. Portland cement concrete for miscellaneous valve appurtenances and cast-in-place vaults shall be the mix number indicated on the Standard Details and as specified in Section 03300.

5. Precast concrete vaults, manhole sections and grade rings shall be as indicated on the Standard Details and as specified in Section 03400.

6. Brick for valve support and miscellaneous valve appurtenances shall be sewer brick as specified in Section 04200.

7. Mortar for brickwork shall be as specified in Section 04100.

8. Frames, covers, and steps shall be as indicated on the Standard Details and as specified in Section 05500.

9. Valves 16" and greater shall not have less than 2 feet from top of operating nut to finish grade. All vertical adjustment shall be at no additional cost to the County.

10. Gate Valves

a. General

Gate valves shall be iron body, resilient-seated, non-rising stem, 2-inch square operating nut which shall turn left (counter-clockwise) to open, with ample strength to withstand and operate under a working pressure of 150 psi, unless otherwise noted. The thrust collar shall be effective for both opening and closing. Valves up to and including 12" shall be manufactured in accordance with AWWA C 509. Valves greater than 12" shall be manufactured in accordance with AWWA C 509 or C 515. Valves shall be furnished with mechanical joint ends unless flanged or other type ends are indicated in the Contract Documents.

b. Gate valves through 20-inch diameter shall be vertical type with O-ring stem seals. Gate valves 20-inches and greater shall have gearing as approved by Harford County.

c. Gate valves shall be coated in accordance with AWWA C550. Both the inside and outside surfaces of the body and bonnet shall be epoxy coated.

d. Buried valves shall be furnished with an extension in accordance with the Standard Details.

e. Wedge rubber shall be molded in place and bonded to the ductile iron portion, and shall not be mechanically attached with screws, rivets, or similar fasteners.

f. Waterway shall be smooth and shall have no depressions or cavities in seat area where foreign material can lodge and prevent closure or sealing.

g. Wedge shall be constructed of gray or ductile iron, fully encapsulated in synthetic rubber except for guide and wedge nut areas.

11. Tapping Valves and Sleeves

Valves for tapping service shall meet all the requirements for gate valves. In addition, the body seat rings shall have a clear opening equal to the nominal size of the tapping valve. Tapping sleeves shall be iron body mechanical joint type, or as approved by the County. Tapping valves for ductile iron pipe shall have flange by mechanical type ends unless otherwise shown on the Plans. All tapping sleeves shall be furnished with an outlet for testing. Tapping sleeves for prestressed concrete pipe shall be furnished and installed in accordance with the pipe manufacturer's recommendations.

12. Butterfly Valves

a. Butterfly valves shall be manufactured in accordance with AWWA C504 as modified herein. Valves shall be Class 150B, and designed for a differential pressure across the valve of 150 psi and a minimum flow of 16 feet per second for opening and closing.

b. Valves shall be furnished with mechanical joint ends unless otherwise noted in the Contract Documents. When flanged ends are specified, valves shall be of the short lay length configuration.

c. Valves shall be furnished with a rubber seat, either in the body or on the disc, and a seat mating surface of alloy cast iron conforming to ASTM A 436, Type I, or 18-8 stainless steel, Type 304 or 316. Valves 24-inch diameter and larger shall have adjustable seats of a design that permits replacement in the field without removal of the valve from the line.

d. Valve shafts shall be stainless steel or monel, and shall be horizontal when the valve is installed in the water main.

e. Valve actuators may be worm gear or traveling nut type with a 2-inch square operating nut which shall turn left (counter-clockwise) to open. Operators shall be fully enclosed in a gasketed grease-filled enclosure, and shall withstand an input of 350 foot pounds to the nut at extreme operator position without damage.

f. Valves shall be furnished with an extension stem terminating a maximum of 6-inches below finished grade. The operating nut shall be located in a standard valve box and shall include a sealed valve position indicator which shows a valve position, and direction and number of turns to open or close the valve.

13. Air and/or Vacuum Release Valve

a. Air-release, air/vacuum, and combination air valves shall be manufactured in accordance with AWWA C512 as modified herein. Valves shall be furnished with threaded ends unless otherwise noted in the Contract Documents.

b. The air/vacuum valve shall have a cast iron body and cast iron cover. The internal compound level mechanism shall be stainless steel and all other internals including float shall be stainless steel to avoid galvanic action. The stainless steel float shall withstand a minimum pressure of 1,000 psi.

c. All materials of construction shall be certified in writing to conform to ASTM specifications as follows:

PART	MATERIAL	SPECIFICATION
Body and Cover	Cast Iron	ASTM A48, Class 35
Internal Linkage	Stainless Steel	Series 300
Float and Internals	Stainless Steel	Series 302
Seat	Buna-N	
Exterior Paint	Phenolic Primer Red Oxide	FDA approved for potable water

d. All internals shall be easily removed through the top cover without removing the main valve from the lines.

e. An isolating valve shall be installed between main and air/vacuum release valve for maintenance.

f. Air/vacuum release valve shall be installed in an easily accessible vault. Vault shall be adequately vented to meet air/vacuum release valve requirement.

g. The valve manufacturer shall furnish installation and maintenance instruction manuals with each valve.

14. Roadway Boxes

Screw type roadway valve boxes and covers shall be made of cast iron conforming to the requirements of ASTM A 48, Class 30 B and shall meet the dimensional and marking requirements indicated on the Standard Details and Section 05500.

3.0 EXECUTION

A. General

1. Excavation, foundation preparation, backfill, and compaction shall be as specified in the Standard Details and Section 02250.

2. Valves shall be restrained, supported, and strapped and/or anchored in accordance with the Standard Details.

B. Gate and Butterfly Valves

1. Gate and butterfly valves shall be installed in accordance with the Standard Details and at the locations shown on the Plans or as directed by the County.

2. Roadway valve boxes shall be centered and plumb over the valve operating nut. Backfill shall be compacted under and around valve boxes to insure that no vertical loads are transmitted to the valve operators.

C. Valves in Vaults or Manholes

Dewatering and air release, vacuum, and combination air valves shall be installed in manholes in accordance with the Standard Details.

D. Field Tests

1. Water valves and appurtenances installed at the same time as a new water main shall be tested, after installation, by the Contractor along with the water main in accordance with Section 02660.

2. Water valves and appurtenances installed in an existing water main will be visually inspected for leakage by the County at the existing water main line pressure before the excavation is backfilled. The valve and joints shall be leak free under line pressure.

3. Tapping sleeves and valves shall be tested after assembly on the existing water main but prior to making the tap. The Contractor shall pressurize the complete assembly to 150 psi for 15 minutes with zero leakage, unless otherwise noted, and the County will visually inspect the tapping sleeve and valve for leakage. No leakage will be permitted.

4.0 METHOD OF MEASUREMENT

A. Water Valves

Measurement for furnishing and installing water valves (gate, tapping valves and sleeves, and butterfly) 8-inches in diameter and greater and appurtenances will be made of the number of each size and type installed complete.

B. Air and/or Vacuum and Combination Air Valves

Measurement for furnishing and installing air and/or vacuum and combination air valves and appurtenances will be made of the number of each size and type installed complete.

5.0 BASIS OF PAYMENT

A. General

1. Payment will be made at the unit price bid. The price bid shall include furnishing all labor, tools, equipment, and materials necessary to satisfactorily complete the work as shown and specified in strict accordance with the Contract Documents.
2. Payment for furnishing and installing water valves and appurtenances will include the following:

    a. Excavation, backfill, compaction, and incidental items as specified in Section 02250.
    b. Furnishing and installing aggregate, tie rods, retainer glands, and concrete valve support and restraint as shown on the Contract Documents.
3. Payment will be made for contingent items when approved by the County.

B. Water Valves

Payment for furnishing and installing water valves (gate, tapping valves and sleeves, and butterfly) 8-inches in diameter and greater and appurtenances will be made for each size and type of valve installed. The price(s) bid shall include traffic control, furnishing and installing all valves, vaults, manholes, roadway valve boxes, jointing materials and buttresses, strapping, restoration; testing of the complete installation; and incidental items to complete the valve installation.

C. Air and/or Vacuum and Combination Air Valves

Payment for furnishing and installing air and/or vacuum and combination air valves and appurtenances will be made for each size and type installed. The price(s) bid shall include traffic control, furnishing and installing all valves, saddles, vaults, manholes, pipe supports, angle valves, corporation stops, extensions, restoration; testing of the completion installation; and incidental items to complete the valve installation.

D. Payment for furnishing and installing valves on water service connections will be made as specified in Section 02664.

SECTION 02664
WATER SERVICES AND APPURTENANCES

1.0 GENERAL

A. Description

Water services and appurtenances shall include, but not necessarily be limited to, furnishing and placing water services with appurtenant meter housings and connection to the water main in accordance with the Contract Documents.

B. Related Work Included Elsewhere

1. Trench Excavation, Backfill, and Compaction: Section 02250

2. Water Mains: Section 02660

3. Water Valves and Appurtenances: Section 02662

4. Cast-In-Place Concrete: Section 03300

5. Precast Concrete: Section 03400

C. Quality Assurance

The County will inspect all materials before and after installation to insure compliance with the Contract Documents.

2.0 MATERIALS

A. General

1. Materials shall be furnished in accordance with the Contract Documents and the current edition of the Approved List of Suppliers and Materials for Water and Sewer Main Construction.

2. To minimize the number of joints, only standard manufacturers length of pipe shall be furnished and installed for all water services unless otherwise indicated on the Plans, or as approved by the County.

B. Materials Furnished by the County

The County will furnish and install 5/8-inch and 3/4-inch water meters and remote readouts for water service connections.

C. Contractor's Options

Refer to Standard Details and the current edition of the Approved List of Suppliers and Materials for Water and Sewer Main Construction.

D. Detailed Material Requirements

1. Water Meters

   a. Water meters shall be as shown on the Standard Details and the Construction Documents.

   b. Water meters shall meet the requirements of AWWA C700, C701, C702 and C703 (proportional type only). The mainline case shall be bronze or epoxy coated cast iron. Registers shall be permanently sealed, straight reading and read in U.S. gallons.

2. Water Service

   a. Water services less than 3-inches in diameter shall be Type K, annealed copper tubing and shall meet the material, chemical and mechanical requirements of ASTM B 88 or SDR 21 gasketted PVC water pipe that meets the requirements of ASTM D 2241 and ASTM D 1784: PVC 1120. The pipe is to have an integral bell that utilizes a gasket for sealing that meets the requirements of ASTM F477.

   b. Water services 3-inches in diameter and larger shall be as specified in Section 02660.

3. Meter fittings, yokes, lids, covers, and appurtenances shall be as noted in the Approved List of Suppliers and Materials for Water Main Construction.

4. Tubing Couplings - Copper tube couplings shall be as noted in the Approved List of Suppliers and Materials for Water Main Construction.

5. Corporation stops with compression type fittings shall be as noted in the most recent Approved List of Suppliers and Materials for Water Main Construction.

6. Gate valves, roadway valve boxes, curb boxes and tapping sleeves for water services shall be as specified in the Standard Details and Section 02662.

7. All service line valves and fittings shall be manufactured in accordance with AWWA C800. Connection to service lines shall be compression type.

8. Meter vaults for 1½-inch or larger service lines shall have aluminum access hatches designed to withstand an H-20 wheel load. Door leaf shall be ¼-inch aluminum diamond or safety tread pattern plate. Channel frame shall be ¼-inch aluminum with concrete anchor flange around the perimeter, bituminous coated where in contact with concrete, and a 1½-inch drainage coupling. Doors shall be equipped with stainless steel hinges and an automatic hold-open arm with release handle. The door shall have a locking mechanism and snap lock with a removable handle. The door shall be operable by a force not to exceed 30 pounds. Fixed ladders shall be equipped with an aluminum LadderUp safety post or approved equal.

9. Tapping saddles shall be manufactured of high strength ductile iron, ASTM A536, protected with a fusion applied epoxy or nylon fused (10-12 mil) coating. Saddles shall be furnished with Type 304 stainless steel straps with a minimum 2 inch wide bearing area and a rubber gasket suitable for potable water.

10. Pipe wall penetrations shall be as specified in the Standard Details.

11. Meter vaults shall be precast concrete vaults of the size indicated on the Standard Details furnished and installed as specified in Section 03400.

12. All water services and/or fire service lines shall be equipped with approved backflow prevention devices.

13. Detector Tape

    Visual Detection Tape shall be 3 inches wide (minimum) nonmetallic blue plastic tape lettered “water” in black graphics.

14. Location Lumber

    Lumber for marking house connection locations shall be minimum 2-inch x 6-inch boards of sufficient length to extend from the plug at the end of the house connection to a height of 4 feet, more or less, above finished grade, painted blue above finished grade.

15. Tracer Wire for Nonmetallic Pipelines

    Tracer wire shall be 8 gage, 7 strand continuous copper wire with a 45 mil polyethylene insulation. The wire shall be blue, have “UL” markings and suitable for direct bury applications. All underground splicing shall be with butt splice connectors and shrink tubing or split bolt connectors with a water proof binder and underground electrical tape.

16. Continuity Test Station

    a. The continuity test station aside a fire hydrant shall be a 2 1/2" shaft catodic test box constructed of ABS plastic with cast iron rim and lid. The minimum box length shall be 24" and the body shall be flared or squared at the base to prevent pull out or settlement. Lid shall be locking, blue in color, and have raised custom lettering noting “test”. Test station shall be complete with an inset removable terminal board with three (3) terminals.

    b. The continuity test station that is located over the water main shall be a 4 1/4" valve box with blue locking lid. Test station shall be complete with an inset removable terminal board with three (3) terminals.

3.0 EXECUTION

A. Preparation

1. Trench excavation, backfill, and compaction, bedding and haunching shall be as specified in Section 02250.

2. Prior to start of utility installation, all rights-of-way shall be graded to within $\pm$0.2 feet of the proposed subgrade in paved areas and finished grade in unpaved areas.

3. Trench Water: The service trench excavation shall be dewatered sufficiently to allow pipe joints to be made under dry conditions. No joint shall be made under water.

4. Laying Service in Freezing Weather: No service shall be laid upon a foundation into which frost has penetrated, nor at any time when there is danger of ice formation or frost penetration at the bottom of the excavation. In freezing weather, open trench length shall be kept to a minimum and the excavation promptly backfilled after the service has been installed.

5. Pipe Bedding: Each service shall be bedded on a solid foundation acceptable to the County and in accordance with the Standard Details. When aggregate bedding is required, bedding shall be installed to grade prior to laying pipe.

B. Water Services and Appurtenances

1. Water services and appurtenances shall be installed in accordance with the approved manufacturers written instructions, County Standards, Contract Documents, and as specified herein:

2. Equipment for Handling Pipe: Proper and suitable tools and appliances as approved for safe and convenient handling and joining of pipes shall be used. Bending of copper tubing shall be accomplished by the use of a tubing bender to eliminate kinking unless otherwise approved by the inspector.

3. Water services shall be jacked or driven under paving unless otherwise directed by the County. In case jacking or driving house services under any type of paving cannot be made, the County with approval of the pertinent agency may permit the Contractor to open cut. In the case of an open cut in paving, trench widths shall not exceed 18 inches or the requirements noted in the utility permit, whichever is most stringent.

4. House services installed in areas other than paving areas shall be open cut or driven at the Contractor's option.

5. All services shall be laid to the grade and lines in accordance with the Contract Documents or as directed by the County. Special care shall be taken to insure that the services are well-bedded. Any defects resulting from settlement shall be repaired by the Contractor at his expense.

6. Copper service pipe shall be cut square to the run of the pipe and free from burrs. 3/4-inch to 1-inch pipe can be cut with a disc-type pipe cutter or hacksaw. An abrasive wheel will not be allowed. Care must be taken not to deform pipe end.

7. All services shall be thoroughly flushed with potable water at the time the main is tapped. All PVC services and services larger than 3-inch diameter shall be installed, chlorinated and tested as specified in Section 02660.

8. The pipe and fittings shall be thoroughly cleaned before being installed, and shall be kept clean until the acceptance of the completed work.

9. All meter vaults 24-inch in diameter and smaller shall be set at a minimum depth of two feet, eight inches (2' - 8"). They shall be set on brick or precast concrete rings and bedded on firm undisturbed earth.

10. Tracer Wire: All nonmetallic water services shall have tracer wire secured with duct tape to the top of the pipe at ten (10) foot centers. The tracer wire shall be continuous for the full length of the pipeline. Continuous conductivity shall be maintained and tested. Underground splice connections shall be made with solderless split bolt connectors and taped.

11. Detector Tape: Install visual detection tape 18-inches above all water service pipe.

C. Connections to Water Mains

1. The following table provides types of allowable taps for different pipe sizes and materials.

Pipe Material	Main Size (inches)	Service Size (inches)	Allowable Tap Type			
			Direct	Service Saddle	Tapped Tee w/Boss	Tapping Sleeve and Valve
DIP	≤ 4	All	NO	YES	YES	NO
DIP	> 4	≤ 1	YES	-	-	-
DIP	6 thru 10	>1	NO	YES	YES	YES
DIP	≥12	≤ 2	YES	-	-	-
DIP	>12	>2	NO	YES	YES	YES
PVC	≤ 4	All	NO	YES	YES	NO
PVC	>4	≤1	YES	-	-	-
PVC	6 thru 10	>1	NO	YES	YES	YES
PVC	12	≤1	YES	-	-	-
PVC	12	>1	NO	YES	YES	YES

2. Corporation taps or tapping sleeves shall be installed on new water mains under operating pressure after the water mains have been chlorinated, tested, and tied in, in accordance with the Contract Documents.

3. Service connections to existing water mains shall be made as noted in this section only where authorized by the County.

4. The County reserves the right to require a saddle on any water main service connection where the integrity of the connection or appurtenances is in question.

4.0 METHOD OF MEASUREMENT

A. Measurement for water services will be made per each type and size of service installed.

B. Measurement for meter settings and vaults or curb stops will not be made for it will be incidental to water service installation.

5.0 BASIS OF PAYMENT

A. General

1. Payment will be made at the unit price bid. The price bid shall include furnishing all labor, tools, equipment, and materials necessary to satisfactorily complete the work as shown and specified in strict accordance with the Contract Documents.

2. The prices bid for furnishing and installing water services shall included the following:

    a. Trench excavation, backfill, compaction, and incidental items as specified in Section 02250.

    b. Tapping the main or furnishing and inserting saddles or fittings in the main with appropriate buttresses, and furnishing and installing corporation stops or valves at the main.

    c. Furnishing and installing cast-in-place or precast concrete or plastic meter vaults with frames and covers and access hatches as per the Contract Documents.

3. Payment will be made for contingent items when approved by the County.

B. Water Services

Payment for furnishing and installing water services will be made per each type and size of service installed. The price(s) bid shall include traffic control furnishing and installing the pipe or tubing, fittings, driving sleeves, curb stops, curb stop valve boxes, meter yoke/meter setting, bypass lines, temporary paving, and incidental items to complete the work.

C. Meter Settings and Vaults

Payment for furnishing and installing meter settings and vaults will not be made for it will be incidental to water service installation.

This page has been intentionally left blank.

SECTION 02666
FIRE HYDRANTS

1.0 GENERAL

A. Description

Fire hydrant installation shall include, but not necessarily be limited to furnishing and installing fire hydrants or relocating fire hydrants in accordance with the Contract Documents.

B. Related Work Included Elsewhere

1. Trench Excavation, Backfill, and Compaction: Section 02250

2. Water Main Installation and Chlorination: Section 02660

3. Water Valves and Appurtenances: Section 02662

4. Cast-In-Place Concrete: Section 03300

5. Unit Masonry: Section 04200

C. Quality Assurance

The County will inspect all materials before, during and after installation to insure compliance with the Contract Documents.

2.0 MATERIALS

A. General

Materials shall be furnished in accordance with the Contract Documents and the current edition of the Approved List of Suppliers and Materials for Water and Sewer Main Construction.

B. Materials Furnished by the County

The County will not furnish any materials for fire hydrant installation or relocation.

C. Contractor's Options

None.

D. Detailed Material Requirements

1. Washed gravel for hydrant foundation shall meet the gradation requirements of AASHTO M 43, Size Number 57.

2. Fire Hydrants

a. Hydrant valve opening shall be at least 5¼-inch diameter net. Inlet connection shall be 6-inch mechanical joint .

b. Hose connections shall consist of two 2½-inch diameter hose connections and one 4½-inch diameter steamer or pumper connection. Hose and pumper nozzle threads shall conform to ANSI Specifications B26 for “National (American) Standard Fire-Hose Coupling Screw Thread.”

c. Operating nut shall be 5-sided, 1½ inches from point to flat, and shall turn left (counterclockwise) to open.

d. The inlet connection to hydrants shall be six (6) inch mechanical joint.

e. Hydrant design shall be such that when the barrel is broken, it may be replaced without excavating or breaking adjacent pavement; that the entire barrel, including all working parts along with the main and drain valve seats, may be removed for inspection or repair without excavating or disturbing the ground.

f. The groundline lugs and valve rod shall be frangible so that in the event of accident, damage or breaking of the hydrant above or near the grade level, the main valve will remain closed and reasonably tight against leakage. Breakaway lugs are required, breakaway bolts will not be accepted.

g. The main valve seal shall be compression type sealing against a bronze seat and the valve shall open against pressure. The main valve shall be removed by use of a short-stemmed wrench.

h. Minimum bury depth shall be three and a half (3 ½) feet measured from the top of the connecting pipe to the ground level at the hydrant.

i. Bonnet shall have cast on the top an arrow and the word "open" indicating the direction for opening.

j. Fire hydrants shall meet the requirements of the “AWWA” Standard for fire hydrants for ordinary water works service C502. All lug bolts shall conform to ASTM A307, Grade B.

k. Interior of shoe shall be epoxy coated.

3.0 EXECUTION

A. General

1. Excavation, foundation preparation, backfill, and compaction shall be as specified in Section 02250.

2. Construction methods shall be in accordance with Section 02660.

B. Fire Hydrant Installation

1. Fire hydrants shall be installed and restrained in accordance with the Standard Details, at the locations shown, and to elevations directed by the County. Hydrants shall be set within an aggregate drainage well extending the full width of the trench, from the center of the hydrant to a length equal to the width in a direction towards the main line, and from the bottom of the trench to a point 6-inches above the drip opening.

2. Hydrant leads shall be laid level on a firm foundation to insure that the hydrant is set plumb. Backfill around the hydrant shall be compacted so as to obtain a density of at least 92% of maximum when measured in accordance with AASHTO T180, Method D.

3. Where hydrants are to be relocated, the Contractor shall ascertain whether or not the hydrant valve has been restrained before removing the hydrant to be relocated.

4. Where the existing lead is to be abandoned the lead shall be capped and blocked at the main by removing the hydrant valve and installing the cap or plug. All caps and plugs shall be buttressed and strapped to the main or restrained in accordance with County Standards.

5. The outside of all fire hydrants above the breakaway flange shall be painted with two coats of paint as noted in the County Approved List of Suppliers and Materials for Water Main Construction.

6. Main port of fire hydrant shall be directed towards the curb or roadway.

7. There shall be no obstruction within a three foot radius of the hydrant.

C. Field Test

1. Fire hydrants installed at the same time as a new water main shall be tested after installation by the Contractor, along with the water main, in accordance with Section 02660.

2. Fire hydrants installed on an existing water main will be visually inspected for leakage by the County at the existing water main line pressure before the excavation is backfilled. The hydrant, valve, and connecting pipe shall be leak-free under line pressure.

4.0 METHOD OF MEASUREMENT

A. Measurement for fire hydrant installations or relocations will be made of the number of hydrants satisfactorily installed or relocated as shown on the Plans or directed by the County.

B. Fire hydrant lead pipe, fittings, valves and appurtenances will not be measured for it will be incidental to fire hydrant installation.

5.0 BASIS OF PAYMENT

A. General

1. Payment will be made at the unit price bid. The price bid shall include furnishing all labor, tools, equipment, and materials necessary to satisfactorily complete the work as shown as specified in strict accordance with the Contract Documents.

2. The price(s) bid for furnishing and installing or relocating fire hydrants shall include the following:

   a. Trench excavation, backfill, compaction, and incidental items as specified in Section 02250.

   b. Furnishing and installing aggregate fill and bedding, tie rods, retainer glands, and concrete thrust blocking as shown on the Standard Details or elsewhere in the Contract Documents.

3. Payment will be made for contingent items when approved by the County.

B. Fire Hydrants

1. New

   Payment for furnishing and installing fire hydrants complete and in place will be made per hydrant for the total number placed. The price bid shall include all traffic control, removal and disposal of spoil materials; furnishing and placing washed gravel under and around the hydrant; tee, hydrant lead, hydrant lead valve, hydrant, all hydrant and/or valve extensions (if required), bracing, testing and painting of the complete installation; and for incidental items to complete the hydrant installation.

2. Relocations

Payment for removing and reinstalling existing fire hydrants complete and in place will be made per hydrant for the total number placed. The price bid shall include all traffic control, removal and disposal of spoil materials, investigation of existing restraint system, all required lead modifications (including valve), the removal and reinstallation of the existing hydrant, all hydrant or valve extensions (if required), the capping or plugging of the existing lead line (if required), retapping the existing water main (if required); furnishing and placing washed gravel under and around the relocated hydrant, testing and painting of the complete installation; and incidental items to complete the hydrant relocation.

C. Fire Hydrant Lead Pipes

Payment for furnishing and installing fire hydrant lead pipe, fittings, valves and appurtenances, including strapping the valve to the water main fitting, will not be made for it will be incidental to the fire hydrant installation.

This page has been intentionally left blank.

SECTION 02700
GRAVITY SANITARY SEWER AND HOUSE CONNECTIONS

1.0 GENERAL

A. Description

Sanitary sewer installation shall include, but not necessarily be limited to furnishing all labor, materials, and services necessary to install pipe, fittings, miscellaneous structures of concrete or brick masonry, and appurtenances for gravity sewer and house connections, of the size and type shown, in accordance with the Contract Documents.

B. Related Work Specified Elsewhere

1. Trench Excavation, Backfill and Compaction: Section 02250

2. Sanitary Sewer Manholes: Section 02710

3. Precast Concrete Structures: Section 03400

4. Mortar and Masonry Grout: Section 04100

5. Unit Masonry: Section 04200

6. Miscellaneous Metals: Section 05500

C. Quality Assurance

The County will inspect all materials before, during and after installation to ensure compliance with the Contract Documents.

2.0 MATERIALS

A. General

1. Materials shall be furnished in accordance with the Contract Documents and the current edition of the Approved List of Suppliers and Materials for Water and Sewer Main Construction.

2. To minimize the number of joints, only standard manufacturers length of pipe shall be furnished and installed for all sanitary sewer mains and house connections unless otherwise indicated on the Plans, or as approved by the County.

B. Pipe Symbols

For convenience and standardization, the various types of pipe are designated on the plans by the following symbols:

CISP - Cast iron soil pipe
DIP - Ductile iron pipe
PVC - Polyvinyl chloride pipe

C. Materials Furnished by the County

1. The County will not furnish any materials for gravity sanitary sewer and house connections.

2. Unless otherwise noted in the “Special Provisions”, the County will make water available from its potable water system for pipeline testing at no charge to the contractor for one test only. The Contractor shall contact the Division of Water and Sewer to coordinate its use. If subsequent testing is required, the Contractor will purchase additional water from the County’s system.

D. Contractor’s Options

1. The Contractor may furnish Polyvinyl chloride (PVC), or ductile iron pipe (DIP) for sewers equal to or smaller than 24-inch diameter unless specified otherwise in writing by the County.

2. The Contractor shall furnish ductile iron pipe (DIP) for sewers greater than 24-inch diameter unless specified otherwise in writing by the County.

3. The Contractor may furnish precast, cast-in-place, or masonry construction for miscellaneous sanitary sewer structures unless specified otherwise in writing by the County.

E. Detailed Material Requirements

1. Polyvinyl Chloride Sewer Pipe (PVC) and Fittings

a. Polyvinyl chloride (PVC) pipe and fittings 4-inch and 6-inch diameter must comply with ASTM D 3034 and F1336 and have a minimum wall thickness of SDR 26. Pipe and fittings 8-inch through 15-inch diameter must comply with ASTM D 3034 and F1336 and have a minimum wall thickness of SDR 35. Pipe and fittings 18-inch through 24-inch diameter shall meet the material requirements of ASTM F679 and F1336 and have a minimum pipe stiffness of 115 psi. All PVC compounds for all sizes shall comply with ASTM D 1784 and have a minimum cell classification of 12454B.

b. All pipe and fittings must be manufactured with a locked-in gasket.

c. All pipe and fittings for standard sewer house connections shall be heavy wall having a wall thickness of SDR 26.

d. All pipe and fittings for drop sewer house connections shall be PVC with a wall thickness of SDR 26, including 45^0 wye fitting on the main.

e. Alternatively, the drop sewer house connection may be constructed of ductile iron pipe, in which case the entire run of sewer main to which the drop connects must constructed of either ductile iron pipe or PVC C900 pipe meeting the detailed material requirements of section 02660.

2. Ductile Iron Pipe (DIP) and Fittings and Cast Iron Fittings

a. Pipe

(1) Ductile iron pipe (DIP) and fittings shall conform to ANSI/AWWA C150/A21.50 in matters of design and ANSI/AWWA C151/A21.51 for materials. Pipe thickness shall conform to the Special Thickness Class 52 minimum or as shown on the Plans. The outside surfaces shall be bituminous coated.

(2) The Contractor shall be cognizant of available ductile iron fittings which adapt to PVC SDR-35.

b. Interior Linings

Ductile iron pipe, ductile iron fittings and cast iron fittings shall be cement-lined in accordance with AWWA C104, double thickness. This lining shall be sealed with a bituminous seal coat. The outside surfaces shall be bituminous coated.

3. Cast Iron Soil Pipe and Fittings

Cast iron soil pipe and fittings for sanitary house connections outside the public right-of-way or on risers shall meet material requirements of ASTM A74, service weight or heavier with mechanical, or gasketed joints.

4. Pipeline Plugs for Testing

Pipeline plugs shall be rubber gasketed or ribbed, watertight, airtight to the extent required by air testing requirements of this Section, cannot be dislodged by testing pressure (internal or external), and of an approved design.

5. Detector Tape

   Detector Tape shall be 3 inches wide (minimum) nonmetallic green plastic tape lettered “sewer” in black graphics.

3.0 EXECUTION

A. Preparation

1. Trench excavation, backfill, and compaction, and pipe bedding and haunching shall be as specified in Section 02250.

2. Prior to start of utility installation, all rights-of-way shall be graded to within ±0.2 feet of the proposed subgrade in paved areas and finished grade in unpaved areas.

3. Trench Water: The pipeline trench excavation shall be dewatered sufficiently to allow pipe joints to be made under dry conditions. No joint shall be made under water. In the event significant groundwater is encountered during construction, the Director may require the Owner and/or Contractor to prepare a corrective plan of action for review and approval by the County.

4. Laying Pipe in Freezing Weather: No pipe shall be laid upon a foundation into which frost has penetrated, nor at any time when there is danger of ice formation or frost penetration at the bottom of the excavation. In freezing weather, open trench length shall be kept to a minimum and the excavation promptly backfilled after the pipe had been installed.

5. Pipe Bedding: Each pipe shall be bedded on a solid foundation acceptable to the County and in accordance with the Standard Details. Bedding shall be installed to insure that joints are properly made and the pipe is firmly supported the full length of the barrel. All sewer mains and services shall be installed with a minimum of six inches of aggregate bedding below the pipe invert, meeting the gradation requirements of AASHTO M43, size number 57. Aggregate bedding shall be installed to grade prior to laying of pipe sections.

B. Pipe Installation

1. All pipe shall be installed in accordance with the approved manufacturers written instructions, Harford County Standards, and as specified herein. These recommendations, if more restrictive than that shown in the Standard Details shall include maximum trench width, bedding requirements, backfill material, and compaction, where applicable. In addition, the following shall apply unless otherwise noted:

a. Polyvinyl chloride sewer pipe (PVC) shall be installed in accordance with the Standard Details and the recommendations of Uni-Bell.

b. Ductile iron pipe (DIP) and cast iron soil pipe shall be installed in accordance with the Standard Details and the recommendations of the Ductile Iron Pipe Research Associations.

2. Equipment for Handling Pipe: Proper and suitable tools and appliances as approved for safe and convenient handling and joining of pipes shall be used.

3. Pipe Installation: Pipe shall be carefully handled and lowered into the trench. Pipe shall be installed with special care to insure that each joint is watertight, has met the required manufacturer's insertion depth, and has no shoulder or unevenness of any kind along the inside of the pipeline. No wedging or blocking will be permitted in installing any pipe unless directed by written order or permission in writing is obtained from the County.

4. Pipe Setting and Protection: No pipe shall be brought into position until the preceding length has been thoroughly bedded and secured in place. Care shall be used to assure water tightness and prevent damage to, or disturbing of, the joints during the refilling process. After pipes have been installed and joints have been made, there shall be no walking on or working over the pipe, except as may be necessary in tamping the backfill material, until the backfill is at least 2 feet over the top of the pipe.

5. Cleaning Pipe: The pipes shall be thoroughly cleaned before being installed and shall be kept clean until acceptance of the completed work. Open ends of all pipelines shall be provided with a stopper carefully fitted to keep dirt and other substances from entering. This stopper shall remain in place at all times when installation is not in progress.

6. Cutting Pipe: Whenever a pipe requires cutting, to fit into the line or bring it to the required location, the work shall be performed by an approved method that leaves a smooth, square end. Cut PVC pipe ends shall have burrs removed and the end beveled to match factory bevel. Field spigots shall be stop-marked with a felt tip marker or wax crayon for the proper length of assembly insertion.

7. Alignment of Pipe: A calibrated, precise sewer pipe laser shall be used to align the pipe to the proper grade. The Contractor is responsible to continuously monitor the line and grade in each pipe run between structures It is the Contractor's responsibility to maintain proper calibration of the equipment throughout the duration of the project.

8. Jointing Pipe

   a. General

      Before any joints are made in the trench, the Contractor shall demonstrate to the County by making a sample joint that methods he will employ conform with the Specifications, will secure a watertight joint, and that the workmen whom he intends to use for this work are familiar with the requirements for making proper joints.

   b. Push-On Gasketed Joints

      Prior to making gasketed joints, both mating pipe ends and the gasket shall be cleaned of all foreign material. The gasket shall then be inserted in or stretched over the cleaned gasket seat and lubricant applied as recommended by the manufacturer and approved by the County. The pipe ends shall be carefully aligned and pushed together to meet the required manufacturer's insertion depth. There shall be no shoulder or unevenness of any kind along the inside of the pipeline. In all cases, the spigot shall be inserted into the previously laid and seated bell, in order to minimize the potential of gasket roll, to prevent the bell dragging and pushing soil into the joint, and to prevent the need to undercut the pipe to lay the bell. All bells shall be laid uphill.

   c. Other methods of jointing pipe will be given consideration by the County, provided the Contractor furnishes evidence that the proposed method is equal to or better than the specified methods, and further, provided that the proposed method has been successfully used and that the joint has previously been manufactured by the company from whom the Contractor proposes to purchase pipe.

   d. All jointing and workmanship shall be in accordance with the manufacturer's recommendations as approved by the County.

9. Detector Tape: Install visual detection tape 18 inches above all mains.

10. Connections to existing work shall be made by the Contractor in the presence of the County at such a time and in such manner as directed and approved by the County. Shut-off operations will not be allowed. The Contractor shall complete the connections with the greatest possible speed and all work will proceed without interruption until the connection operation is complete. When specified in the "Special Provisions", the Contractor shall make connections at night.

C. Sanitary House Connections

1. Sanitary house connection branch fittings shall be located where designated by the contract documents and/or the County. Short pieces of sewer pipe shall be field-cut to meet this condition as approved. The Contractor shall have available at the construction site factory approved equipment to machine and adapt the field-cut end to standard couplings and jointing materials.

2. Sanitary Sewer Taps: All taps made into sanitary sewer lines shall be made by an approved hole-cutting method in accordance with the manufacturer=s recommendations. Every effort shall be made to prevent entrance of foreign matter into the pipe during the tapping procedure.

3. Backfill for the support of Y-branches and bends shall be placed as shown in the Standard Details, or as directed.

D. Field Tests

1. General

a. All portions of the sewers and appurtenances shall be tested. The County shall have the final decision as to the method or methods used, i.e. water infiltration, water exfiltration, air, mirror, or combination of these.

b. After installation, sanitary sewers and sanitary house connections will be inspected by the County with the assistance of the Contractor for compliance with these specifications. Inspections and tests will not be conducted until the section of pipeline being inspected and tested has been backfilled, dewatering pumps have been removed from the area, and the ground water has stabilized.

c. The Contractor shall schedule all tests with the County at least 2 working days in advance of the test, and shall conduct all tests in the presence of the County. On County Capital Projects, the County will witness one test at no cost the Contractor. Should the pipeline fail the first County witnessed test, the Contractor shall reimburse the County for all costs resulting from such additional tests so required until the pipeline passes the test(s). The Contractor shall also reimburse the County for the cost of inspection if the Contractor is not prepared for any test, or for additional tests required.

d. Sewer mains may not contain any debris, silt, earth, gravel, rock, or other foreign material prior to field testing. Each manhole run shall be flushed by the Contractor with sufficient quantities of potable water to flush all material within the sewer main prior to performing any tests. The downstream manhole shall be plugged and the flushing water and debris shall be

collected within this manhole. The Contractor shall completely remove the water and all stones, silt, sediment, debris and foreign material from the manhole. The flush water and debris may not extend beyond one or more manhole runs which collectively add up to 400 feet. Flush water may not be re-used for subsequent manhole runs. Potable water from the county water system shall be quantified in gallons by the Contractor and provided to the Division of Water and Sewer Maintenance personnel at the time of testing. At no time may flush water or debris be introduced into the existing County sewage collection system. The Contractor shall be responsible for all labor, material, equipment and other associated costs of cleaning the sewer mains to the satisfaction of the County.

e. Control and/or treatment of the discharge of chlorinated water used for flushing, cleaning, or testing operations shall comply with all current applicable local, state, and federal regulations. Costs associated with the control or treatment procedures shall be the Contractor's responsibility.

f. Harford County Water and Sewer will allow repairs to sewer mains on a very limited basis, if the main does not pass the pressure test. Repairs to sewer mains will be allowed with gasketed PVC couplings only. There shall be no more than one repair within any running 125 feet section in any given manhole run. If the number of identified air leaks exceed the above requirement, then new pipe shall be laid instead of additional PVC couplings. Upon completion of construction and successful testing, there shall be no more than one repair within any running 125 feet section in any given manhole run.

2. Materials

a. When specific test of materials are called for in the referenced standards and specifications, the County has the option of requiring that any or all of these tests be performed.

b. Polyvinyl chloride (PVC) pipe and couplings shall be homogeneous throughout and free from visible cracks, bubbles, blisters, holes, foreign inclusions, cuts or scrapes on inside or outside surfaces or other imperfections which may impair the performance or life of the pipe. Each pipe shall be straight-to-within 1 1/4 inch per 20-foot length of pipe when uniformly supported along its entire length, and shall have a true circular cross-section to within $\pm$ 1/64 inch.

c. Cast iron soil pipe, ductile iron pipe (DIP), and ductile iron and cast iron fittings shall be sound and without defects that might impair its service.

3. Visual Inspection

   a. All equipment necessary for the inspection will be furnished by the County, however, the Contractor shall provide assistance as may be required to enable the County to perform the inspection.

   b. The County will inspect all sanitary sewers for alignment, grade, leakage, and condition. The inspection may be conducted by crawling or walking through the pipeline, using mirrors to reflect light through the pipeline, or closed circuit television equipment.

      1) If a mirror test is used, the pipe alignment will be acceptable if it is sufficiently true and straight to allow passage of the reflected light with an image of a “full moon”.

      2) The pipeline shall be installed on a continuous grade so it does not pond or trap water anywhere along the line.

      3) No visible infiltration will be allowed. Any water leakage into the system sufficient to constitute any noticeable trickle or dribble shall be corrected.

4. Acceptance Testing

   a. General

      1) The Contractor shall furnish all labor, tools, materials, and equipment necessary to perform the specified tests. Testing shall be conducted only after the section of sewer has passed the visual inspection.

      2) Generally sewers will be tested from manhole to manhole or from manhole to terminus of the pipeline if there is no manhole at the other extremity. Sewers shall only be tested after the brick channel and bench have been installed. Testing shall be by low pressure air and/or infiltration/exfiltration as specified herein and/or as determined by the County.

      3) If the sanitary sewer or sanitary house connection fails any test specified herein, the Contractor shall, at his own expense, repair or replace any defective component and retest the failed section or component until all requirements are met. Defective material shall be replaced.

      4) All equipment used for testing shall be approved by the County.

b. Low Pressure Air Test

Sanitary sewers 24-inch diameter and smaller and attached sanitary house connections shall be tested with low pressure air in accordance with the following procedures. Testing may only occur after the brick channel and bench have been completed.

1) Test plugs shall be supplied and installed by the Contractor within the pipeline at each manhole. Each plug shall be securely braced.

2) If the pipeline to be tested is expected to be below the ground water table, the County may visually inspect the trench prior to backfilling to determine the elevation of the groundwater table. All gauge pressures for the test shall be increased by an amount to provide 4 psig above the back pressure due to ground water submergence over the end of the probe to a maximum of 6 psi in the pipe system to be tested.

3) If the air pressure required for the test is greater than 6 psig, the pipeline shall not be air tested, but shall be tested for infiltration in accordance with method indicated in Paragraph C, which follows.

4) The Contractor shall add air slowly to the portion of the pipeline under test until the internal pressure is raised to 4.0 psig greater than the average back pressure of any groundwater above the pipe=s invert.

5) The Contractor shall not allow personnel in manholes after the air pressure is increased in the sewer. If the test plug is suspected of leaking, the Contractor shall first relieve the pressure before any adjustments are made to eliminate air leakage at the plug. The Contractor may pre-coat the plug with a soap solution to check for leakage.

6) The Contractor shall allow the air temperature to stabilize for at least 2 minutes by adding only the amount of air required to maintain 4.0 psig above groundwater back pressure. After this 2 minute period, the Contractor shall completely disconnect the hose and compressor from the section being tested to assure no additional air is added to the pipeline.

7) The time required for the pressure to drop 1 psig will be observed and recorded. Pipelines which fail to maintain the stipulated pressure for a period equal to or greater than the holding time shown

in the table at the end of this Section shall be deemed to have failed the low pressure air test and will not be accepted by the County.

8) The portion of the line being tested will be acceptable if the time required in minutes for the pressure to decrease from 4.0 to 3.0 psig shall not be less than the time shown for the given diameters in the following table:

Pipe Diameter in Inches	Minutes
6	3.0
8	4.0
10	5.0
12	5.5
15	7.5
18	8.5
21	10.0
24	11.5

9) Air testing may be required for pipe diameters greater than 24 inch when specified by the Engineer and approved by Harford County.

c. Infiltration/Exfiltration Tests

1) Sanitary sewers 24-inch in diameter and larger and sewers in which air testing is not specified or required shall be subjected to either infiltration or exfiltration tests as determined by the County. Testing may be conducted from manhole to manhole, or between more than two manholes, however, the length to be tested shall not exceed 700 feet. Minimum test duration shall be 24 hours unless otherwise directed by the County. Testing shall be conducted in accordance with ASTM C 969 as modified herein.

a) Infiltration test shall be made by measuring the amount of water infiltrating into the pipeline section at the lower end of the section being tested by means of a weir installed in the pipe or by other measurement method approved by the County.

b) Exfiltration test shall be made by plugging the lower manhole, filling the pipeline section with water to a level of at least 2 feet above the crown of the pipe at the upstream end of the section being tested or 2 feet above groundwater level whichever is greater and measuring the water level drop in

the manhole at the end of the specified test period. Pipelines shall be filled with water for at least 24 hours immediately before the test.

c) Test Criteria

The maximum leakage allowance in the completed sewer lines shall not be greater than 25 gallons per inch diameter per mile per twenty-four hours. Note that this is a rate and does not in any way prescribe or infer the length of the line to be included in each test section.

d. Deflection Testing

In addition to other tests detailed in this Section, PVC sanitary sewers may be tested for deflection (reduction in vertical inside diameter). Testing shall be performed by passing a 5% undersized GO/NO-GO mandrel or sewer ball through the pipeline or measuring deflection continuously by using a deflectometer. Maximum allowable deflection shall be 5%.

e. Closed-Circuit Television Inspection

The County retains the right to inspect sewer mains by means of roboticly controlled closed circuit television cameras.

4.0 METHOD OF MEASUREMENT

A. Sanitary Sewers

Measurement for furnishing and installing sanitary sewers will be made horizontally along the center line of the pipe for each size and type of pipe without deduction for wye or drop connections. The inside lengths of manholes and junction chambers will be deducted.

B. Sanitary House Connections

Measurements for furnishing and installing sanitary house connections will be made horizontally along the center line of pipe for each size and type of pipe from the center line of the sewer to the end of the house connection without deduction for wyes, bends, cleanouts, plugs, or other fittings.

5.0 BASIS OF PAYMENT

A. General

1. Payment will be made at the unit and/or lump sum prices bid. The prices bid shall include furnishing all labor, tools, equipment, and materials necessary to complete the work as shown and specified, in strict accordance with the Contract Documents.

2. The price(s) bid for furnishing and installing sanitary sewers and sanitary house connections shall include trench excavation, backfill, compaction, and incidental items as specified in Section 02250.

3. Payment will be made for contingent items when approved by the County.

B. Sanitary Sewers

Payment for furnishing and installing sanitary sewers, complete and in place, will be made per linear foot of the size and type of pipe installed. The price(s) bid shall include traffic control, furnishing and installing of all pipe, fittings, plugs, stoppers, and jointing materials; connection to existing pipelines, structures, or manholes; testing; providing an approved spoil site, and disposing of all spoil or excess materials, aggregate bedding, and backfill shown on Standard Detail S-1; all environmental and erosion or sediment control; restoration of all disturbed areas; and incidental items to complete the sanitary sewers.

C. Sanitary House Connections

Payment for furnishing and installing sanitary house connections complete and in place will be made per linear foot of the size and type of pipe installed. The price(s) bid shall include traffic control, furnishing and installing all pipe, fittings, vertical riser, cleanout, cap, plugs, precast concrete blocks where required, jointing materials; connection to sewer branch fittings; testing; providing an approved spoil site, and disposing of all spoil or excess materials; aggregate bedding, and backfill shown on Standard Detail S-22; all environmental and erosion or sediment control work including off-site requirements at spoil storage or borrow sites; restoration of all disturbed areas; and incidental items to complete the sanitary house connection.

This page has been intentionally left blank.

SECTION 02710
SANITARY SEWER MANHOLES

1.0 GENERAL

A. Description

Sanitary sewer manhole installation shall include, but not necessarily be limited to, furnishing and installing sanitary sewer manholes and miscellaneous structures of concrete or brick masonry built to the shapes and dimensions shown and in accordance with the Contract Documents.

B. Related Work Included Elsewhere

1. Trench Excavation, Backfill, and Compaction: Section 02250

2. Sanitary Sewers: Section 02700

3. Cast-in-Place Concrete: Section 03300

4. Precast Concrete Structures: Section 03400

5. Mortar: Section 04100

6. Brick Masonry: Section 04200

C. Quality Assurance

The County will inspect all materials delivered to the job-site. Any pre-cast concrete sections which are not in compliance with the required dimensions; which are not true, square, plumb, symmetrical; which have honey-combing; cracks, chips; which do not have smooth surfaces; or otherwise have visible material defects shall be rejected and removed from the project site. Rejected materials may not be repaired but shall be replaced with new products.

2.0 MATERIALS

A. General

1. Materials shall be furnished in accordance with the Contract Documents and the current edition of the Approved List of Suppliers and Materials for Water and Sewer Main Construction.

B. Materials Furnished by the County

The County will not furnish any materials for sanitary manholes.

C. Contractor's Options

1. The Contractor may furnish polypropylene, or plastic-coated steel for manhole steps.

2. Standard sanitary manholes shall be precast construction; however, the Contractor may furnish cast-in-place, or masonry construction for miscellaneous sanitary sewer structures with the approval of the County.

D. Detailed Material Requirements

1. Granular bedding beneath manhole bases shall meet the gradation requirements of AASHTO M43, Size Number 57, as specified in Section 02240.

2. Portland cement concrete for cast-in-place structures shall be as specified in Section 03300, mix number as indicated on the Standard Details or the Plans.

3. Precast manhole bases, risers, cone sections, grade rings, and precast utility structures shall be as specified in Section 03400.

4. Joints shall be "O" ring compression type meeting the requirements of ASTM C-443.

5. Non-shrink grout shall be as specified in Section 04100.

6. Mortar for brickwork and grade rings shall be as specified in Section 04100.

7. Brick for manhole inverts and miscellaneous structures shall be sewer brick as specified in Section 04200.

8. Frames and covers shall be as shown in the Standard Details and as specified in Section 05500.

9. Manhole steps shall be as per the Standard Details. The plastic coated type shall be manufactured using a minimum 3/8-inch diameter steel reinforcing rod meeting the requirements of ASTM A 615, as a core. The plastic coating shall meet the requirements of ASTM 2146, Type II, Grade 4375B.

10. Force main discharge manholes and above grade manholes shall be seal-coated to the limits noted on the Standard Details with 16 mils of a coal tar polyamide epoxy.

11. Manhole-to-Pipeline Connectors

    a. Cast-in-place type connectors shall be:

        1) A Banded-boot type for sewer grades greater than 18% and less than 46.5%.

2) A compression type for sewer grades less than 18%.

b. For doghouse type manhole applications a banded-boot type connector shall be used.

c. Mechanically wedge-in-place type connectors shall be used for cored openings.

12. Manholes shall have sealant between the manhole and the manhole frame. The sealant shall be mastic rope, type B, 3/4 inch minimum diameter, butyl based, meeting requirements of AASHTO M 198.

13. The stainless steel insert dish for manholes shall be manufactured of materials resistant to corrosion from atmospheres containing hydrogen sulfide and dilute sulfuric acid. The insert body shall be 18 GA, 304 stainless steel. The manufacturer must furnish a load test verification showing a load test failure in excess of 3,000 lbs. The insert shall contain gas relief valves designed to release a pressure of .5 to 2.0 psi and have a water leakdown rate no greater than 5 gallons per 24 hours. The handle shall be able to withstand a pull of 500 lbs. without breakage.

3.0 EXECUTION

A. General

1. Precast sections shall be transported and handled with proper equipment to protect the units from damage. Sections shall be handled by means of lifting inserts embedded in the concrete. All pre-cast concrete unit construction shall consist of new and un-used products, free from defects. Repairs to pre-cast concrete units shall be strictly prohibited, before, and after shipment. Pre-cast concrete units damaged as a result of installation shall be removed and disposed of by the Contractor at no cost to the County and not returned to the project site. Damaged pre-cast units shall be replaced with new un-used pre-cast units from the same manufacturer. Injection of grout sealant in the surrounding soils to correct joint leakage is prohibited.

2. Excavation, foundation preparation, backfill, and compaction shall be as specified in Section 02250.

3. Manholes and drop connections shall be installed in accordance with the Standard Details and as specified herein.

4. Miscellaneous structures shall be constructed where shown and as indicated on the Plans or as directed by the County.

a. Cast-in-place concrete construction shall be as specified in Section 03300.

b. Brick construction shall be as specified in Section 04200.

5. Pipelines connected to manholes and other structures shall have a pipe joint between 3 and 7 feet from the exterior wall of the structure.

6. All new openings in existing manholes shall be core drilled in a manner acceptable to the manhole manufacturer and the County.

7. A stainless steel insert dish shall be installed within all manholes where the edge of the cover is five (5) feet or less to the face of the curb. They shall also be installed in manholes that lie within the vertical sumps of roadways, swales, or ditches and as directed by the County.

B. Manhole Installation

1. Manholes, frames and covers shall be installed as pipeline installation progresses. The manhole vertical axis shall be plumb and directly over the centerline of the pipeline unless otherwise shown or directed.

2. Manhole joints shall be watertight. The exterior of all joints below grade on new manholes shall be fully wrapped with a minimum 12-inch wide wrapping product specifically designed to prevent ground water infiltration at manhole joints. The wrapping product shall be designed for adhesion to concrete surfaces and shall meet the approved materials list. Installation of the wrap shall be in accordance with the manufacturer instructions. The wrap shall be centered over the manhole joint.

3. Grade rings shall be set on a full bed of mortar.

4. Channels for receiving and passing water shall be formed in the bottom of manholes as shown or directed. All such channels shall be lined with sewer brick. Channels shall slope smoothly and evenly and a channel bench constructed to the height of the crown of the highest pipe. Channels and a watertight plug shall be installed in the manhole for future extensions where shown on the Plans or directed by the County.

5. Pipes shall be cut flush with the inside wall of the manhole.

6. The frame and cover shall be installed in accordance with the Standard Details.

7. Parging of the interior brick surfaces will not be permitted.

C. Curing

1. Manhole channels and benches shall receive a minimum twenty-four (24) hour cure time prior to being subjected to sewage flow. The County reserves the right to adjust this curing period if deemed necessary.

D. Tests

The construction of new manholes shall provide for a watertight interior, free of infiltration of groundwater and inflow of surface storm water runoff. After construction and during the one-year maintenance period there shall be no leakage or seepage of water into the manhole from defects related to materials and workmanship. All new manholes shall be vacuum tested as follows:

1. Vacuum Testing of New Manholes

Vacuum testing procedures shall be performed in accordance with ASTM C1244 with the following clarifications and modifications.

a. Vacuum testing shall be performed by a utility testing company approved by Harford County Water and Sewer Maintenance Department. The vacuum tests shall be performed after subgrade is within plus or minus 0.2 feet. Harford County retains the right to require additional vacuum tests if it believes other construction activities have damaged the integrity of the manhole.

b. The brick bench and channel does not have to be installed at the time of vacuum testing.

c. The manhole shall be fully backfilled prior to performing the vacuum test.

d. Prior to testing, all lift holes shall be plugged with mortar. All pipes and pipe stubs entering the manhole shall be temporarily plugged, taking care to securely brace the pipes and plugs to prevent them from being drawn into the manhole.

e. The test head shall be placed at the top of the manhole in accordance with the recommendation of the testing apparatus manufacturer. A vacuum of 10 inches of mercury shall be drawn on the manhole. Then the valve on the vacuum line of the test head shall be closed and the time measured to drop the vacuum to 9 inches of mercury. The manhole is acceptable if the time for the vacuum to drop from 10 to 9 inches of mercury is equal to or greater than that shown in the following table:

Manhole Depth	Manhole Diameter (ft.)				
	4	5	6	7	8
	Time (Seconds)				
<4	10	13	16	19	23
6	15	20	25	29	34
8	20	26	33	38	45
10	25	33	41	48	56
12	30	39	49	57	67
14	35	46	57	67	78
16	40	52	67	76	89
18	45	59	73	86	100
20	50	65	81	95	111
22	55	72	89	105	122
23	59	78	97	114	133

f. If the vacuum test does not pass, the manhole shall be excavated and the joints examined for source(s) of the failure. The joints shall be properly cleared of foreign matter and gaskets checked. The manhole sections shall be re-set as necessary until the passing of the vacuum tests.

E. Protection During Pavement Operations

The Contractor shall provide whatever means necessary to prevent damage to manholes during paving operations and to prevent soil, gravel, asphalt and construction debris from entering sanitary manholes and sewer mains during paving operations.

The County reserves the right to require the Contractor to perform additional vacuum tests if it believes the manhole was damaged from paving or other construction activities. All damaged manhole sections shall be replaced and re-tested at the Contractor's expense. Any frames and covers and brick work damaged or pushed off-center from paving or other construction activities shall be re-set to the satisfaction of the County at no expense to the County.

The Contractor shall recognize that any debris entering sanitary manholes from sewer, road or other construction is strictly prohibited. Prior to the operational walkthrough, all soil, gravel, asphalt and other construction debris shall be completely removed from the manhole and sanitary sewer.

4.0 METHOD OF MEASUREMENT

A. Sanitary Sewer Manholes

Measurement for furnishing and installing sanitary sewer manholes will be made per vertical foot for the number of each type constructed, as shown on the Standard Details. Measurement will be made from the lowest point in the manhole invert to the highest external point on the top of the manhole frame and cover.

B. Drop Connections

Measurement for drop connections will be made for the number and type constructed. The manhole on which the drop structure is constructed will be measured and paid for separately as described above.

C. Miscellaneous Structures

Measurement for miscellaneous structures will be made for the number of each type of unit constructed in accordance with the Contract Documents or as directed.

5.0 BASIS OF PAYMENT

A. General

1. Payments will be made at the unit and/or lump sum prices bid. The prices bid shall include furnishing all labor, tools, equipment, and materials necessary to satisfactorily complete the work as shown, specified, and in strict accordance with the Contract Documents.

2. The price(s) bid for furnishing and installing sanitary sewer manholes shall include the following:

   a. Trench excavation, backfill, compaction, and incidental items as specified in Section 02250.

   b. Furnishing and installing granular bedding for manhole foundation as shown on the Standard Details and as required elsewhere in the Contract Documents.

3. Payment will be made for contingent items when approved by the County.

B. Sanitary Sewer Manholes

Payment for sanitary sewer manholes will be made per each type and size (diameter) of manhole installed. The price(s) bid shall include traffic control, furnishing and installing all precast, masonry, or cast-in-place concrete units, waterproofing, reinforcing bars, ladder rungs, metal frames and covers; all testing; providing an approved spoil site, and disposing of all spoil and excess materials; all environmental and erosion or sediment control work including off-site requirements at spoil storage or borrow sites; restoration of all disturbed areas, and incidental items to complete the manholes.

C. Manhole Drop Connections

Payment for drop connections will be made per type and size constructed as shown, specified, and directed. The price(s) bid shall include furnishing and installing all pipe, fittings, precast concrete, concrete encasement, aggregate and incidental items to complete the drop connection.

D. Miscellaneous Structures

Payment for miscellaneous structures will be made for each structure constructed to limits shown on the Contract Documents and shall be full compensation for furnishing all items necessary to satisfactorily complete the work.

E. Waterproofing

No separate payment will be made for waterproofing, but will be considered incidental to unit prices bid.

SECTION 02720
SANITARY SEWER FORCE MAINS

1.0 GENERAL

A. Description

Sanitary sewer force main installation shall include, but not necessarily be limited to, furnishing and installing pressure rated pipe, fittings, and appurtenances of size and type shown on the Plans, installed on firm foundation true to line and grade and in accordance with the Contract Documents.

B. Related Work Specified Elsewhere

1. Trench Excavation, Backfill, and Compaction; Section 02250.

2. Precast Concrete Utility Structures; Section 03400.

C. Quality Assurance

1. Materials

The County will inspect all materials before, during and after installation to ensure compliance with the Contract Documents.

2.0 MATERIALS

A. General

1. Materials shall be furnished in accordance with the Contract Documents and the current edition of the Approved List of Suppliers and Materials for Water and Sewer Main Construction.

2. To minimize the number of joints, only standard manufacturers length of pipe shall be furnished and installed for all sanitary sewer mains and house connections unless otherwise indicated on the plans, or as approved by the County.

B. Pipe Symbols

For convenience and standardization, the various types of pipe are designated on the plans by the symbols noted in Section 02660, entitled “Water Mains”.

C. Materials Furnished by the County

1. The County will not furnish any materials for sanitary sewer force main construction.

2. Unless otherwise noted in the “Special Provisions”, the County will make water available from its potable water system for pipeline testing at no charge to the Contractor for one test only. The Contractor shall contact the Division of Water and Sewer to coordinate its use. If subsequent testing is required, the Contractor will purchase additional water from the County’s system.

D. Contractor's Options

The Contractor shall only furnish ductile iron pipe and fittings, for sanitary sewer force mains unless otherwise noted.

E. Detailed Material Requirements

1. Portland cement concrete for pipe buttresses and anchorages shall be Mix No. 1, as specified in Section 03300.

2. Ductile iron pipe and fittings, shall be as specified in Section 02660. Pressure rating or class shall be as noted in the Contract Documents. Cement lining and coatings shall be as required on ductile iron pipe (DIP) and fittings.

   Pipe shall be ductile iron pipe meeting the minimum material requirements for water main in Section 02660. Pipe shall be special thickness class 52; however, the specified thickness shall be noted on the construction drawings or project manual and shall account for expected operating pressures, surge pressures and a factor of safety.

3. Joint Restraint

   a. Restrained joint pipe and fittings shall be of the pipe manufacturer’s standard design.

   b. Ductile iron retainer glands for use with mechanical type joints shall be as approved.

   c. Rod for tie rod assemblies shall meet the material requirements of ASTM A193, Grade B7, and shall be threaded for at lease 8 inches on both ends. Rod shall be 3/4 inch diameter unless otherwise noted.

   d. Nuts shall meet the requirements of ASTM A194. Manufactured tie rod and accessories shall result in the completed restrained joint assembly having a minimum working pressure rating of 200 psi.

4. Resilient Seat Gate Valves

   Resilient seat gate valves shall be as specified in Section 2662 for water valves.

5. Valve Boxes

   Valve boxes shall be as specified in Section 02660, except the covers shall be labeled “SEWER”.

6. Sewage Air Release and Combination Air/Vacuum Valves

   a. Sewage air and vacuum valves shall be of the type that automatically releases air, gas or vapor under pressure, automatically exhausts large quantities of air during the filling of a system, and allows air to reenter during draining or when a vacuum occurs.

   b. Sewage air and vacuum valves shall have an elongated cast iron body and cast iron cover. The internal compound lever mechanism shall be stainless steel and all other internals, including float, stainless steel to positively prevent a galvanic action. The stainless steel float shall withstand a minimum pressure of 1,000 psi.

   c. All materials of construction shall be certified in writing to conform to ASTM specifications as follows:

PART	MATERIAL	SPECIFICATION
Body and Cover	Cast Iron	ASTM A48, Class 30
Internals	Stainless Steel	Series 300
Float	Stainless Steel	Series 300
Seat	Buna-N	
Exterior Paint	Phenolic Primer Red Oxide	FDA approved for potable water

   d. The valve manufacturer shall furnish installation and maintenance instruction manuals with each valve.

   e. Isolating valve shall be installed between force main and air and vacuum valve.

f. Sewage air and vacuum valves shall be installed in an easily accessible vault. Vault shall be adequately vented to meet air and vacuum valve requirements.

g. All internals shall be easily removed through the top cover without removing the main valve from the lines.

7. Detector Tape

Visual detection tape shall be 3 inches wide (minimum) nonmetallic green plastic tape, lettered “SEWER” in black graphics.

3.0 EXECUTION

A. General

1. Trench excavation, foundation preparation, backfill, and compaction shall be as specified in Section 02250.

2. Force main installation shall be as specified in Section 02660, “Water Mains”, except chlorination is not required.

3. Pipe bedding, thrust and anchor blocks, and force main appurtenances shall be installed in accordance with the Standard Details for Water.

4. Resilient Seat gate valve installation shall be as specified in Section 02662 for water valves.

5. Sewage air release and combination air release/vacuum valves shall be installed in accordance with the Standard Details.

B. Field Test

1. The force main and appurtenances shall be tested in accordance with Section 02660, except as modified herein.

2. Chlorination will not be required.

4.0 METHOD OF MEASUREMENT

A. Force Main

Measurement for furnishing and installing force main pipe and fittings will be per linear foot made horizontally along the centerline of the pipe through all fittings and appurtenances.

B. Isolation, Sewage Air Release and Combination Air/Vacuum Valves

Measurement for isolation, sewage air release and combination air/vacuum valves will be made of the number of each size and type of valves installed complete.

5.0 BASIS OF PAYMENT

A. General

1. Payment will be made at the unit and/or lump sum prices bid. The prices bid shall include furnishing all labor, tools, equipment and materials necessary to complete the work as shown, specified, and in strict accordance with the Contract Documents.

2. Payment for furnishing and installing force main pipelines and appurtenances will include the following:

   a. Trench excavation, backfill, compaction and incidental items as specified in Section 02250.

   b. Furnishing and installing bedding material for air release and vacuum valve manhole fill as per the Contract Documents.

3. Payment will be made for contingent items when approved by the County.

B. Force Main

Payment for furnishing and installing force main pipelines, complete and in place, will be made per linear foot of the size and type installed. The price(s) bid shall include traffic control, furnishing and installing all pipe, fittings, and jointing materials, removing existing buttresses when necessary, joint restraint, tracer wire and test stations where required, furnishing materials for and constructing all concrete anchorages and buttresses; strapping of fittings, connecting to existing pipelines or structures, testing; all aggregate bedding, and backfill shown on Standard Detail W-1; providing an approved spoil site, and disposing of all spoil or excess materials; all environmental and erosion or sediment control work including off-site requirements at spoil storage or borrow sites; restoration of all disturbed areas, and for all appurtenances, and incidental items to complete the force main.

C. Isolation, Sewage Air Release and Combination Air/Vacuum Valves

Payment for furnishing and installing isolation, sewage air release and combination air/vacuum valves, complete and in place, will be made for each size and type of valve installed. The price(s) bid shall include traffic control, furnishing and installing all valves, saddles, vaults or manholes, lids or frames and covers, pipe supports, angle valves, corporation stops, extension bar, restoration; testing of the complete installation; and incidental items to complete the valve installation.

SECTION 02731
LOW PRESSURE SEWER

1.0 GENERAL

A. Low pressure system installation shall include, but not necessarily be limited to, furnishing and installing pressure sewer pipe, valves, fittings, and appurtenances of the size and type shown on the Contract Plans and in accordance with the Contract Documents and approved installation details.

B. Related Work Specified Elsewhere

1. Clearing and Grubbing: Section 02110
2. Trench Excavation, Backfill, and Compaction: Section 02250
3. Water Valves and Appurtenances: Section 02662
4. Water Services and Appurtenances: Section 02664
5. Cast-in-Place Concrete: Section 03300
6. Miscellaneous Metals: Section 05500
7. Sewage Grinder Pumping units: Section 11307

C. Quality Assurance

The County will inspect all materials before, during and after installation to ensure compliance with the Contract Documents.

2.0 MATERIALS

A. General

1. Materials shall be furnished in accordance with the Contract Documents and the current edition of the Approved List of Suppliers and Materials for Water and Sewer Construction.
2. To minimize the number of joints, only standard manufacturer's length of pipe shall be furnished and installed for all low pressure sewers unless otherwise indicated on the plans or approved by the County.

v. Impact strength shall meet the requirements of ASTM D-2444.

d. All valves 2” and smaller shall be Ball Valve Curb Stop with Female Iron Pipe Thread - (NPT) end connections. The valve size shall be same as the pipeline size. Connection to force main shall be packed joint with stainless steel insert, push-on joint or approved equal. Valves shall open left, counter-clockwise and be suitable for the conveyance of wastewater.

The ball valves shall turn one-quarter (1/4) turn, ninety degrees to open and shall have a minimum working pressure rating of 200 psi. The ball valve shall be suitable for buried service and shall be manufactured in accordance with AWWA C-500.

Valve extension stems shall be manufactured with cold rolled steel and have a centering ring when depth of ball valve is greater than 6' - 0". Top of stem shall be compatible with a standard tee-head wrench and extend to a maximum of 3-feet below finished grade. Bottom of stem shall be compatible with the ball valve tee-head and pinned to top of valve.

All valves 3” and larger shall be resilient seal gate valves, as specified in accordance with Sections 02660 and 02664.

e. Roadway valve boxes shall be as specified in Section 02660 except the covers shall be labeled “SEWER”.

f. Detector Tape

Visual detection tape shall be 3 inches wide (minimum) non-metallic green plastic tape lettered “sewer” in black graphics.

g. Tracer Wire for Non Metallic Pipelines

Tracer wire shall be 8-gage, 7 strand continuous copper wire with 45 mil polyethylene insulation. The wire shall be green, have “UL” markings and suitable for direct bury applications. All underground splicing shall be with butt splice connectors and shrink tubing or split bolt connections with a water proof binder and underground electrical tape.

h. Tapping Saddle

Tapping saddle shall be specifically designed to tap a live HDPE low pressure sewer main and shall be capable of being clamped to the main with stainless steel bolts. The tapping tee shall contain a full wrap-around saddle. The tapping tee shall contain an integral brass cutter and sleeve with lower and upper “cutter stops” which shall also function as a cut-off valve. Tapping tee shall be rated for a minimum 160 psi.

i. Small Diameter Ductile Iron Pipe – Iron Pipe Size (IPS)

Small diameter ductile iron pipe and fittings shall meet the requirements of ASTM A-536. Grade 65-45-12 with a minimum wall thickness of 0.25 inches. Threads shall be NPT per ANSI B.120-1.

j. 24-inch Frame and Cover Adjustment Riser

Adjustment riser shall be a multi-purpose rubber composite which enables the cast iron frame to be easily adjusted to the finished pavement surface. The adjustment riser shall be specifically manufactured for standard sanitary manholes and frames and shall withstand vehicular traffic conditions.

k. Continuity Test Station

a. The continuity test station adjacent to a fire hydrant shall be a 2 1/2" shaft cathodic test box constructed of ABS plastic with cast iron rim and lid. The minimum box length shall be 24" and the body shall be flared or squared at the base to prevent pull out or settling. Lid shall be locking, green in color and have raised custom lettering noting “test”. Test station shall be complete with an inset removable terminal board with three (3) terminals.

b. The continuity test station that is located over the low pressure sewer shall be a 4 1/4" valve box with blue locking lid. Test station shall be complete with an inset removable terminal board with three (3) terminals.

3.0 EXECUTION

A. Pressure Sewer, Fittings and Valves

1. The pressure sewer main shall be installed by either directional boring or open cut methods. In either case, unless otherwise prohibited by specific wetland permit requirements or otherwise shown on the construction drawings or specified, the entire drainage and utility easement and/or right-of-way shall be cleared and grubbed prior to the pipeline construction in accordance with Section 02110.

2. For open cut methods, the installation of pressure sewer pipe shall be in accordance with Section 02660 of the Standard Specifications. For directional drilling methods, the installation of pressure sewer pipe shall be in accordance with Section 02310 of the Standard Specifications.

3. Service valve assemblies (SVA) subjected to test pressure or system operating

pressure prior to completion of service pipe installation and backfill shall be provided with adequate temporary bracing or anchorage to prevent valve separation from pipe.

4. HDPE pipe and fittings shall be installed in strict accordance with the manufacturer's recommendations.

B. Pressure Sewer House Service Connections and Appurtenances

1. Service connections from sewage grinder pump connections or pressure sewer mains shall be installed using service saddles as the pressure sewer main is being installed or with installation of the service valve assemblies as approved by the Owner.

2. Intersection, Flushing Connections, Terminal Flushing Connections and In-Line Cleanouts and Valves: Flushing connections and in-line cleanouts and valves shall be provided where indicated on the Drawings and in accordance with the Construction Details.

C. Concrete Thrust Blocks

The Contractor shall provide concrete thrust blocks on all pressure sewer bends, tees, plugs and caps in accordance with the drawings and Standard Details. The entire face of earth against which the thrust block will bear shall be undisturbed earth or soil that meets all required compaction requirements, flat, and at the proper angle to counteract the thrust. Concrete thrust blocks shall be cured for a minimum of 48 hours before testing. Wood for temporary blocking and valve box installation shall be pressure treated southern yellow pine suitable for a buried application. Wood for blocking shall be solid, a minimum of one inch thick. No wood buttressing shall be used except as a temporary restraining measure until remaining work is completed.

D. Tracer Wire

All non-metallic mains shall have a tracer wire secured with duct tape to the top of the pipe. The tracer wire shall be continuous for the full length of the pipeline. Continuous conductivity shall be maintained and tested. Underground splice connections shall be made with solderless split bolt connectors and taped to pipe.

E. Detector Tape

Install visual detection tape 18 inches above all mains.

B. Materials

1. Pressure Sewer Piping, Fittings and Valves

a. All low pressure sewer pipe, valves and fittings 4-inches and larger shall be in accordance with Section 02720.

b. HDPE Pipe

i. High density polyethylene pipe and fittings (HDPE) shall have a standard thermoplastic material designation code of PE 3408, comply with all requirements for a Grade PE34 according to ASTM D 3350, and have a PPI recommended designation of PE 3408.

ii. Pipe and fittings shall be manufactured from identical material. The manufacturer shall provide certification that samples of the manufacturer's production pipe have been tested in-house, in accordance with ASTM D 2837, and validated in accordance with the latest revision of PPI TR-3. Under these procedures, the minimum hydrostatic design basis shall be certified by the manufacturer to be 1600 psi at 73.4^0 F and 800 psi at 140^0F.

iii. Pipe shall be DR 11, pressure rated for 160 psi.

iv. Pipe and fittings shall be butt fusible at 440^0 F or 500^0 F, and shall be socket or sidewall fusible at 500^0 F.

v. Pipe shall be manufactured in accordance with ASTM F 714.

vi. Fittings and transition pieces shall be butt fusion type, meeting the requirements of ASTM D 3261 and this specification. All fittings shall be pressure rated to match the system piping to which they are fused. At the point of fusion, the outside diameter and minimum wall thickness shall meet the outside diameter and minimum wall thickness of ASTM F 714 for the same size of pipe.

c. PVC Pipe

i. Pipe shall be push-on type, SDR-21, rated for 200 psi, and meet requirements of ASTM D-2241.

ii. The pipe shall be plainly marked with manufacturers name, size, material type and grade, NSF seal, and pressure rating.

iii. The material shall consist of Grade 1 PVC compound material in accordance with ASTM D-1784.

iv. Rubber gaskets shall meet the requirements of ASTM D-1869.

F. Inspection and Field Tests

1. The Owner will inspect all materials before and after installation to ensure compliance with these Contract Documents. When specific material tests are called for in the referenced standards and specifications, the County shall have the option of requiring that any or all these tests be performed for materials furnished for a specified project.

2. After installation, pressure piping and appurtenances, shall be tested by the Contractor for compliance with the Contract Documents. The Contractor shall furnish all labor, tools, materials, and equipment necessary to perform the specified tests.

3. All tests shall be witnessed by the County. The Contractor shall schedule all tests with the Owner at least 2 working days in advance.

4. If any section of the pressure sewer system fails the inspection and/or tests, the Contractor shall, at his own expense, replace, repair, adjust, seal, or reseal the personnel, to witness tests once only for each section tested. If additional tests are required, all costs of County personnel and equipment will be deducted from amounts to be paid the Contractor.

5. Inspection and testing of the various components of the low pressure sewer system shall be tested in accordance with Section 02660 of the Standard Specifications. Specified test pressure shall be 80 psi as measured at the high point of the low pressure sewer.

6. At the Contractor's expense and risk, he may elect to test against closed curb stops. If test pressures do not hold, the Contractor shall follow the procedure in item 8 below.

7. Testing shall include the entire low pressure system as one whole and complete system. With the exception of the ball valve curb stops on the service valve assemblies, and on the flushing connection risers, all valves shall be in the open position during testing.

8. Normal test procedures include the installation of a temporary capped and buttressed pipe stub extending from the ball valve curb stop at each service valve assembly as shown on the Standard Details. However, at the Contractor's risk and expense, he may elect to test against closed ball valve curb stops at the service valve assemblies. If the ball valve curb stops are unable to hold the test pressure, the Contractor shall, at his expense, install the temporary capped and buttressed pipe stub as described above. In all cases, there must be a physical break between the ball valve curb stop and grinder pump basin during testing. This physical break must remain until the entire low pressure system has been tested and approved.

The pipe and fittings between the ball valve curb stop and grinder pump basin will not be tested.

G. Continuity Testing for Non-Metallic Pipe

1. After backfilling, the County shall test at the Contractor's/Developer's expense, the tracer wire to demonstrate electrical continuity between valve boxes and through the length of the non-metallic pipeline installed. The Contractor shall schedule all tests with the County at least 2 working days in advance. Any discontinuity shall be located, repaired, and retested at the Contractor's expense until continuity is demonstrated.

2. On Capital Projects, the County will perform one continuity test at no cost to the Contractor. Should the continuity test fail, the Contractor shall reimburse the County for all costs resulting from such additional test so required until the continuity test passes.

H. Service Taps on Low Pressure Sewer

Service connections on live low pressure sewers shall be made with tapping saddles specifically designed for HDPE pipe. Tapping saddle shall be secured to the low pressure sewer by tightening the supplied bolts in strict accordance with the pipe and fitting manufacturers' recommendations. Plastic stiffener shall be inserted into the service connection end of tap. HDPE service line shall connect to HDPE adaptor.

4.0 METHOD OF MEASUREMENT

Measurement for furnishing and installing low pressure sewer, including appurtenances, flushing connections and service valve assemblies will be made horizontally along the centerline of the pipe for each size and type of pipe.

5.0 BASIS OF PAYMENT

A. General

1. Payment will be made at the unit and/or lump sum prices bid. The prices shall include furnishing all labor, tools, equipment and materials necessary to complete the work as shown, and in strict accordance with the Contract Documents.

2. Payment for furnishing and installing low pressure sewer and appurtenances will include the following:

   a. Clearing and Grubbing: Section 02110

   b. Aggregate Backfill: Section 02240

   c. Trench Excavation, Backfill and Compaction: Section 02250

d. Directional boring of pressure sewer: Section 02310

e. Restoration: Section 02800

f. Turf Establishment: Section 02820

g. Pre-cast Concrete Utility Services: Section 03400

3. Payment will be made for contingent items when approved by the County.

B. Low Pressure Sewer

Payment for furnishing and installing low pressure sewer, complete in place, will be made per linear foot of the size and type installed. The price(s) bid shall include clearing and grubbing, sediment and erosion control, traffic control, furnishing and installing pipe, fittings and jointing materials, joint restraint, buttresses, connection to existing pipelines or structures, testing, aggregate, excavation and backfill, disposing of spoil material, restoration of all disturbed areas and all other incidental items to complete the work.

C. Air/Vacuum Valves

Payment for air/vacuum valves shall be in accordance with Section 02720.

D. In-line Flushing Connections, Terminal Flushing Connections and Service Valve Assemblies.

Payment for furnishing and installing in-line flushing connections, terminal flushing connections and service valve assemblies complete in place, will be made for each unit installed. The price(s) bid shall include clearing and grubbing, sediment and erosion control, excavation and backfill, furnishing and installing all valves, pipe and fittings, furnishing and installing all vaults and manhole frames and covers, restoration and testing for the complete installation and all incidental items necessary to complete the work.

SECTION 02800
RESTORATION

1.0 GENERAL

A. Description

Restoration shall include, but not necessarily be limited to all clean up and disposal of waste materials and the restabilization of disturbed areas including paved areas, non-paved areas, concrete improvements, street signs, mail boxes, fences, trees, shrubs and other improvements whether shown in the Contract Documents or not.

B. Related Work Included Elsewhere

1. Test Pits: Section 02012
2. Removal or Abandonment of Existing Utilities: Section 02050
3. Clearing and Grubbing: Section 02110
4. Aggregate Backfill: Section 02240
5. Trench Excavation, Backfill and Compaction: Section 02250
6. Boring and/or Jacking Pipe: Section 02300
7. Tunneling: Section 02400
8. Turf Establishment: Section 02820
9. Sodding: Section 02830
10. Soil Stabilization Matting: Section 02850
11. Cast-In-Place Concrete: Section 03300

C. Quality Assurance

The County will inspect all materials before, during and after installation to ensure compliance with the Contract Documents.

2.0 MATERIALS

A. General

Materials shall be furnished in accordance with the Contract Documents and the current edition of the Approved List of Suppliers and Materials for Water and Sewer Main Construction.

B. Materials Furnished by the County

The County will not furnish any materials for restoration other than those acceptable materials which are available from the trench excavation limits as shown on the Contract Documents.

C. Contractor's Options

Not applicable.

D. Detailed Material Requirements

Not applicable.

3.0 EXECUTION

A. General

After the completion of backfilling, all materials not used therein shall be removed and disposed of in such a manner and at such point or points as shall be approved or directed by the County; and all roads, sidewalks, and other places on the line of the work shall be left free of debris, clean, and in good order. Said cleaning-up shall be done by the Contractor without extra compensation; and if he shall fail to do such work within twenty four hours after receipt of notice, the County may arrange to have the cleaning-up done by others; and the cost shall be retained out of the monies due or to become due to the Contractor under the Contract. In case of emergency, the County may restore or remove and dispose of materials wherever necessary without giving previous notice to the Contractor, and the cost of doing so shall be retained from any monies due to become due the Contractor under the contract.

B. Paved Areas

1. Immediately upon completion of the trench backfill and compaction as previously specified, the Contractor shall provide graded aggregate subbase, temporary bituminous surfacing material as per the Contract Documents and/or direction of the governing regulatory agency.

2. Weather permitting, the Contractor shall remove and dispose of the temporary surfacing materials, cut-back the edge of the existing pavement as per the Contract Documents, and permanently patch-pave the area as specified in the Contract Documents and/or governing agency direction. This shall be done within 30 calendar days after backfilling and compacting the trench as described in the paragraph above or within the time period specified by the governing agency.

C. Concrete Improvements

Sidewalks, curbs, combination curb and gutter, drive aprons, and other concrete improvements removed, soiled, or damaged by the Contractor's activities shall be cleaned or replaced by the Contractor in kind, or as directed by the County and/or Contract Documents without extra compensation.

D. Non-paved Areas

1. Immediately upon completion of the trench backfill and compaction as previously specified, the Contractor shall temporarily stabilize the area in accordance with the Contract Documents.

2. Weather permitting, within 14 days after the completion of trench backfill and compaction, the Contractor shall permanently stabilize the area with seeding and mulching or sodding, as noted in the Contract Documents.

E. Street Signs, Mail Boxes, Fences, Shrubs, Trees, and Other Improvements

1. Existing street signs and traffic control devices stored or relocated by the Contractor will be reset by the Contractor after construction in the area is complete and the work approved by the County.

2. In case of emergency, the County may reset street signs and traffic control devices wherever necessary without giving previous notice to the contractor; and the cost of doing so shall be retained from any monies due to become due the contractor under the contract.

3. Mail boxes shall be carefully removed by the Contractor to the extent required to permit construction operations and as directed by the Postal Service. It shall be the Contractor's responsibility to temporarily reset mail boxes during construction to maintain service until the boxes are permanently reset in their original locations or at locations designated by the Postal Service. The Contractor shall comply with all Postal Service regulations regarding the location and height of all mail boxes disturbed by his activities.

4. Existing fences, paper boxes, signs, property markers, and other similar items shall be carefully removed by the Contractor to the extent required to permit construction operations and as directed by the County. The Contractor shall safely store all items during the time that they are down and when possible, re-erect them in the original locations or at locations designated by the County.

5. Shrubs, hedges, and other plantings shall be transplanted with sufficient earth to insure that no damage to their major root system occurs. After transplanting has been accomplished, it shall be the Contractor's responsibility to water all plants until their growth is established.

4.0 METHOD OF MEASUREMENT

Restoration will not be measured.

5.0 BASIS OF PAYMENT

Restoration will not be paid for as a separate item but is considered incidental to other items of work. Payment will be included in other related items of work and will constitute full compensation for all labor, equipment, tools, and incidentals necessary to complete the required work.

SECTION 02820
TURF ESTABLISHMENT

1.0 GENERAL

A. Description

Lawn Restoration shall include, but not necessarily be limited to, topsoil, soil preparation, seeding, fertilizing, mulching, liming as required, over seeding, and refertilizing all areas disturbed by construction and where designated for lawn restoration in accordance with the Contract Documents.

B. Related Work Included Elsewhere

1. Clearing and Grubbing: Section 02110

2. Sodding: Section 02830

3. Soil Stabilization Matting: Section 02850

C. Quality Assurance

The County will inspect all materials before, during and after installation to insure compliance with the Contract Documents.

D. Establishment of Vegetation within Wetland Areas

Permanent soil stabilization measures within wetland and wetland buffers, and other environmentally sensitive areas shall be performed in strict accordance with the Maryland Department of the Environment and/or Army Corps of Engineers Wetlands and Waterways Permit. The turf establishment requirements herein do not pertain to special conditions associated with wetland areas.

E. Turf establishment shall be performed by a professional landscape contractor in which over fifty percent of their business is landscape work. The Contractor shall provide evidence of landscapers work history and references for Harford County review and approval prior to the work being performed.

F. The Contractor and landscape subcontractor shall obtain and file at the work site a copy of the Maryland Turf Grass Law and Regulations and Maryland Seed Law and Regulations available from the Maryland Department of Agriculture.

2.0 MATERIALS

A. Materials Furnished by the County

1. The County will not furnish any materials for lawn restoration.

2. The Contractor may purchase water for hydroseeding or turf irrigation from the County's potable water system. The Contractor shall contact the Division of Water and Sewer to coordinate its use.

B. Contractor's Options

1. Fertilizer may be furnished in either dry or liquid form unless otherwise noted.

2. Mulch may consist of straw, hay, salt hay, or wood cellulose fiber unless otherwise noted.

C. Detailed Material Requirements

1. Ground Limestone

Ground limestone shall contain not less than 80% calcium and magnesium carbonates. Dolomitic or magnesium limestone shall contain at least 10% magnesium as magnesium oxide. The limestone shall be ground to meet the following size gradation:

Sieve Sizes U.S. Standard	Percent Passing by Weight
No. 10	100
No. 20	98
No. 100	50

2. Fertilizer

a. Fertilizer analysis shall be 10-10-10 for temporary seeding and 10-20-20 for permanent seeding. It shall be a standard commercial grade fertilizer meeting the requirements of all State. Commercial fertilizer shall provide the minimum percentage of available nutrients specified.

b. Fertilizer shall be furnished in bulk or new, clean, sealed, and properly labeled bags. Fertilizer failing to meet the specified analysis may be used as determined by the County providing sufficient materials are applied to comply with the specified nutrients per unit of measure without additional cost to the County.

3. Seed

a. Seed lots must be state certified and blended under the supervision of the Maryland Department of Agriculture (MDA), Turf and Seed Section.

b. All seed and labeling must fully comply with the Maryland Seed Law and these Specifications.

c. Each container shall have permanently affixed to it an accurate analysis tag and a certification tag.

d. All seed lots to be used in this mixture shall have been pretested by the Maryland Seed Laboratory to insure compliance with Specifications.

e. A quality control sample of the delivered mixture may be submitted to the Maryland Seed Laboratory for testing prior to payment and any lots found not to comply with the Specifications shall be returned at the Contractor's expense.

f. The Engineer's representative shall collect all seed certification tags and/or sod certification prior to the beginning of any seed or sod work.

g. No seed shall be used after date of expiration.

h. Seed type and application rates

(i) For sunny and partly shaded improved areas which are mowed regulary: sow the following mixtures at 195 pounds per acre or 4.5 pounds per 1,000 square feet between March 1 and May 31 and between August 15 and October 31:

Grass Type	Percent	Certified Grass Species
Tall Fescue	90-100	Adventure, Apache, Arid, Falcon, Finelawn I or Rebel II
Kentucky Bluegrass	0-10	Common, Kenblue, Vica, Ram 1 or Monopoly

(ii) For heavily shaded improved areas which are mowed regularly: sow the following mixtures at 175 pounds per acre or 4 pounds per 1,000 square feet between March 1 and May 31 and between August 15 and October 31:

Grass Type	Percent	Certified Grass Species
Tall Fescue	65	Adventure, Apache, Arid, Falcon, Finelawn I or Rebel II
Perennial Ryegrass	10	All Star, Blazer, Manhatten, Palmer, Pennant, Pennfine, Premier, Prelude, Regal or Repell
Creeping Red Fescue and/or Chewings Fescue	25	Penlawn, Flyer, Long fellow Victory or Jamestown

(iii) For unimproved areas not to be mowed: sow mixture at 175 pounds per acre or 4 pounds per 1,000 square feet between March 1 and May 31 and between August 15 and October 31:

Grass Type	Percent	Certified Grass Species
Tall Fescue	80	Kentucky 31 (K-31)
Perennial Ryegrass	20	Common

All seed varieties shall meet the following minimum specifications:

1)	Minimum Purity	98%
2)	Minimum Germination	85%
3)	Maximum Other Crop	0.1%
4)	Maximum Weed Seed	0.1%
5)	Noxious Weeds	None

* Must be free of ryegrass, timothy, orchard grass, bentgrass, Canada bluegrass, clover, or any other contaminant which shall be unsightly and uncontrollable.

** Must be free of dock, cheat, chess, chickweed, crabgrass, plantain, and black magic.

*** Must be free of all Maryland prohibited and restricted noxious weeds.

4. Mulch

   a. Mulches shall be free of clay, stones, foreign substances, plant parts of Canada Thistle and Johnsongrass, and reasonably free of other weed seeds. Mulches containing Canada Thistle and Johnsongrass shall not be used for any purposes.

   b. Straw, hay, and salt mulches shall not contain sticks larger than 1/4-inch in diameter or other materials which would prevent matting down during application. No straw, hay, or salt hay mulches shall be used within 48 hours after cutting. Straw, hay, and salt hay shall be free from mold and other objectionable material and shall be in an air-dry condition suitable for placing with mulch blower equipment.

   c. The following mulches may be acceptable by visual inspection provided they meet the above and following requirements:

      1) Straw: Straw shall consist of thoroughly threshed wheat, rye, or oat straw.

      2) Hay: Hay shall consist of native grasses or other plant material approved by the County. Hay shall be free of noxious weed seeds as specified in the Maryland Seed Law.

      3) Salt Hay: Salt hay shall consist of well cured beach grasses or other approved material.

      4) Wood Cellulose Fiber: Wood cellulose fiber shall consist of specially prepared wood cellulose processed into a uniform fibrous physical state. Wood cellulose fiber shall contain a green dye that will provide easy visual inspection for uniformity of the slurry spread. The wood cellulose fiber, including dye, shall contain no germination or growth inhibiting properties. The material shall be manufactured and processed in a manner that the wood cellulose fiber will blend with seed, fertilizer, and other additives to form a homogeneous slurry. The wood cellulose fiber shall perform satisfactorily in hydraulic seeding equipment without clogging or damaging the equipment.

         The manufacturer shall certify that wood cellulose fiber meets the following requirements:

Requirements	Specification Limits
Particle Length	Approximately 3/8 inch
Particle Thickness	Approximately 3/64 inch
Net Dry Weight Content	Minimum stated on bag
ph, ASTM D778	4.0 to 8.5
Ash Content, ASTM D586	1.6% maximum
Water Holding Capacity	90% minimum

The material shall be delivered in packages of uniform weight not exceeding 75 pounds net weight and bear the name of the manufacturer, the net weight, and a supplemental statement of net weight content.

5) Mulch Binder

Mulch binder shall be emulsified asphalts or wood cellulose fiber meeting the requirements of Section 02820.2, Article C, Paragraph 4, Item c, 4).

6) Water

Water used in the planting or care of vegetation shall be free from oil, acids, alkalis, salts, or any substance injurious to plant life. Water from streams, lakes, ponds, or similar sources shall not be used unless the source is approved by the County.

5. Topsoil

a. Topsoil shall consist of natural surface agricultural soil capable of sustaining vigorous plant growth. Topsoil shall be free of stones, roots, rubbish and other objectionable materials including Bermuda grass, poison ivy and other items harmful to plant life. Organic matter, as determined by AASHTO Test T-194, shall be 1.5 to 10 percent by weight. The pH shall range between 5.0 and 7.5. The soil analyses shall meet the following in accordance with AASHTO M146: Sand (20 to 75% by weight), Silt (10 to 60% by weight), Clay (5 to 30% by weight).

b. Topsoil on site may be salvaged for re-use provided that it meets the above specified requirements.

c. The source of off-site manufactured topsoil shall originate from reputable local supplier with prior Harford County approval.

3.0 EXECUTION

A. Seeding Seasons

Seed shall be sown from March 1 to May 31 and from August 15 to October 15 inclusive as soon as the soil is dry enough to allow proper penetration of a seedbed. Extensions beyond these time periods may be granted by the County, depending upon weather conditions for the period in question. Any planting outside of these seasons shall be solely at the Contractor's risk and shall not be subject to compensation until stabilization has been accomplished in accordance with these Specifications. No seeding shall be done on frozen ground or when the temperature is 32°F or lower.

B. Schedule of Procedure

The Contractor shall begin his work at a point or points approved by the County. When topsoil is required for areas to be seeded, all topsoiling shall be completed before seeding operations are started.

C. Soil Preparation

1. For unimproved areas which will not be mowed regularly: Areas of disturbance shall be graded to match the original condition. Soil shall be scarified to a depth of 2-inches. Remove all stones greater than 1-inch in diameter by means of manual or mechanical landscape rakes. Seed and mulch as specified below.

2. For improved areas which will be mowed regularly: Soil shall be lightly scarified if compacted. Remove all stones greater than 1-inch by means of manual or mechanical landscape rakes. Topsoil shall be placed to a uniform compacted depth of 2-inches, and shall be graded to match original conditions.

D. Seeding

Seeding shall consist of soil preparation as specified above and application of seed, fertilizer, and mulch as specified below. Seed application shall be by either of the following application methods as the Contractor may elect:

1. Dry Application Method

a. Ground Limestone: Ground limestone, shall be applied, at rates as determined by soil test or no less than 50 pounds per 1000 square feet, separately before the application of any fertilizer or seed on seedbeds which have previously been prepared. Where ground limestone is required to be worked in, the seedbed shall again be properly graded and dressed for seeding. Limestone shall be worked into the full depth of topsoil. Limestone shall not be applied to unimproved areas.

b. Fertilizer: Fertilizer of the analysis 10-20-20 shall be applied at a rate of 1,000 pounds per acre.

c. Seed Application: Application rates shall be in accordance with Section 2.0 above. After seeding, the areas shall be lightly raked and rolled. Areas which do not "catch" shall be re-seeded at an interval of fourteen (14) days, which shall continue until a satisfactory growth of grass is established over the entire area.

2. Wet Application Method

a. General: Apply seed and fertilizer (ground limestone, if required) by spraying the material on previously prepared seedbeds in the form of an aqueous mixture using the methods and equipment described herein. The rates of application shall be the same as those specified for the Dry Application Method.

b. Spraying Equipment: The spraying equipment shall have a water tank equipped with a bar or liquid level gage calibrated to read in increments not larger than 50 gallons over the entire range of the tank capacity. The gage shall be mounted to be visible to the nozzle operator. The tank shall also be equipped with an agitation system capable of keeping all the solids in the mixture in complete suspension at all times until used.

c. Ground Limestone

1) Ground limestone, if required, shall be sprayed separately from mixtures of seed and fertilizer on areas flatter than 3:1. The water-limestone mixture shall contain a maximum of 600 pounds per 100 gallons. The water limestone mixture shall be applied at a minimum rate of 1000 gallons per acre. The water-limestone mixture shall be worked into the topsoil. After working the ground limestone into the topsoil, the seedbed shall again be properly graded and dressed.

2) Ground limestone shall not be required to be applied separately on slope areas 3:1 and steeper. The water-seed-fertilizer and limestone mixture shall be applied at a minimum rate of 1000 gallons per acre in the relative proportions specified so that these combined solids do not exceed 600 pounds per 100 gallons.

d. Application

1) Mixtures of seed and fertilizer shall only be sprayed upon previously prepared seedbeds on which ground limestone, if required, has been incorporated. Seed and/or fertilizer shall be mixed together with water in the relative proportions specified so that these combined solids do not exceed 300 pounds/100 gallons. The water-seed-

fertilizer mixture shall be applied at a minimum rate of 1000 gallons/acre.

2) All mixtures shall be constantly agitated from the time they are mixed until they are finally applied to the seedbed. All seed mixtures in aqueous agitation shall be used within eight hours after mixing, except for leguminous seed which shall be used within one hour after mixing. Seed mixtures not utilized within the time limits shall be wasted and disposed of at locations acceptable to the County.

3) The mixtures shall be applied by high pressure spray equipment which shall always be directed upward into the air so the mixtures will fall to the ground like rain in a uniform spray. Nozzles or sprays shall never be directed toward the ground in a manner to produce erosion or runoff.

4) Particular care shall be exercised to insure that application is made uniformly at the prescribed rate and to guard against misses and overlaps. Proper predetermined quantities of the mixture, as specified, shall be used to cover specified sections of known area. Checks on the rate and uniformity of application may be made by observing the degree of wetting of the ground or by distributing test sheets of paper or collecting containers over the area at intervals and observing the quantity of material deposited thereon.

5) The spray method shall not be used during periods of high winds which prohibit satisfactory spray patterns.

6) Seed and fertilizer applied by the spray method need not be raked into the soil.

7) Any spray or residual which disfigures or otherwise damages existing structures or vegetation shall be thoroughly cleaned from the damaged surface.

E. Mulch Application

1. Mulch materials shall be furnished, hauled, and evenly applied on the area shown in the Contract Documents and/or as directed by the County. All mulch shall be immediately applied after seeding. Mulch applied by hand shall provide a loose depth of not less than 1.5 inches nor more than 3 inches. Mulch applied by the blowing method shall provide a loose depth of not less than 1 inch nor more than 2 inches, and 95% of the mulch shall be 6 inches or more in length. Mulch applied by the above methods shall achieve a uniform distribution and depth so no more than 10% of the soil surface is exposed. Mulch applied either by hand or the blowing method shall be spread evenly over all seeded areas at the rate of 2.0 tons per acre.

2. If the mulch is to be secured with a mulch anchoring tool, the rate shall be 2.5 tons per acre. If the tracking method is used, the rate of mulch shall be 1.5 tons per acre.

F. Securing Mulch

Mulch may be secured by any of the following methods.

Where mulch has been secured with a wood cellulose fiber binder, it will not be permissible to walk on the slopes after the binder has been applied. He will be required to place temporary protective covers over existing signs just before seeding and mulching. The covering shall be immediately removed after seeding and mulching operations are completed.

1. Peg and String Method

If the peg and string method is used, the mulch shall be secured by stakes or wire pins driven into the ground on 5-foot centers or less. Binder twine shall be strung between adjacent stakes in straight lines and crisscrossed diagonally over the mulch, after which the stakes shall be driven nearly flush to the ground to draw the twine down tight onto the mulch.

2. Spray Method

If the spray method is used, all mulched surfaces shall be sprayed with the selected binder material so the surface has a uniform appearance. Mulch binder may be sprayed on the mulched slope areas from either the top or the bottom of the slope. A spray nozzle of approved design must be used. The nozzle shall be operated at a distance of not less than 4 feet from the surface of the mulch. Uniform distribution of the binder material will be required. A pump or an air compressor of adequate capacity shall be used to insure the uniform distribution of binder material.

a. Chemical Binder

Wood cellulose fiber used as a binder shall be applied at a net dry weight of 750 pounds per acre.

The wood cellulose fiber shall be mixed with water, and the mixture shall contain a maximum of 50 pounds of wood cellulose fiber per 100 gallons.

3. Mix Method

If the mix method is used, the mulch shall be blown onto the area by a mulch blower; and the binder material shall be sprayed into the mulch as it leaves the mulch blower. For rates of application, see Spray Method above.

G. Wood Cellulose Fiber

Wood cellulose fiber used as a mulch shall be applied at a net dry weight of 1,500 pounds per acre. The wood cellulose fiber shall be mixed with water at a maximum rate of 50 pounds of wood cellulose fiber per 100 gallons. This wood cellulose fiber will be permitted to be used in the following areas when approved, and as directed, by the County:

1. Narrow disturbed areas up to 8 feet wide adjacent to pavement where traffic created gusts of wind could cause problems with straw;

2. Deep or high slope areas inaccessible to straw application by a mulching machine.

H. Repair of Defective Areas

1. The responsibility for maintaining treated areas shall be as follows. Until the Project is finally accepted, the Contractor will be required to repair or replace any seeding or mulching that is defective or damaged. When, in the judgment of the County, such defects or damages are the result of poor workmanship or failure to meet the requirements of the Contract Documents, the cost of necessary repairs or replacement shall be borne by the Contractor. However, once the Contractor has completed the seeding and mulching of any area in accordance with the provisions of the Contract Documents and to the satisfaction of the County, no additional work at his expense will be required. Subsequent repairs and replacements deemed necessary shall be made by the Contractor and will be paid for as additional work or extra work.

2. When either the Dry or Wet Application Method is used for work done out of season, it will be required that the Contractor establish a good stand of grass of uniform color and density. If, when the Contract has been completed, it is not possible to make an adequate determination of color, density and uniformity of such stand of grass, payment for the unaccepted portions of the areas will be withheld until these requirements have been met.

4.0 METHOD OF MEASUREMENT

A. Except when used as a contingent item or noted otherwise, measurement for turf establishment will not be made, as it shall be included in the unit quantity item for utility installation.

B. When used as a contingent item or noted otherwise, measurement for turf establishment will be made on the surface area, measured in place, acceptably established.

5.0 BASIS OF PAYMENT

A. General

1. Except when used as a contingent item or noted otherwise, payment for turf establishment will not be made, as it shall be included in the unit quantity item for utility installation.

2. When used as a contingent item or noted otherwise, payment will be made at the unit price bid. The price bid shall include furnishing all labor, tools, equipment, and materials necessary to complete the work as shown and specified in strict accordance with the Contract Documents.

3. Payment will be made for contingent items when approved by the County.

B. Turf Establishment

1. Payment for turf establishment will be made per square yard at the contingent prices established in the bid form. The price shall include all traffic control and incidental items to complete the turf establishment.

SECTION 02830
SODDING

1.0 GENERAL

A. Description

Sodding shall include, but not necessarily be limited to, furnishing, hauling, and placing grass sod on prepared areas in accordance with the Contract Documents.

B. Related Work Included Elsewhere

1. Clearing and Grubbing: Section 02110

2. Turf Establishment: Section 02820

3. Soil Stabilization Matting: Section 02850

C. Quality Assurance

The County will inspect all materials before, during, and after installation to ensure compliance with the Contract Documents.

2.0 MATERIALS

A. Materials Furnished by the County

1. The County will not furnish any materials for sodding.

2. The Contractor may purchase water from the County's potable water system. The Contractor shall contact the Division of Water and Sewer to coordinate its use.

B. Contractor's Options

Fertilizer may be furnished in either dry or liquid form unless otherwise noted.

C. Detailed Material Requirement

1. Grass Sod

Grass sod shall be well rooted and produced in the State of Maryland. It shall, when placed, be live growing grass not less than 3-years old, of which not less than 96% shall be improved tall fescue (Rebel II, Rebel Falcon, Olympic) and not more than 4% Kentucky Bluegrass (Victa, Nassau) at the time of installation. It shall, when placed, have been cut and rolled (stored) not longer than 48 hours. It shall be cut in strips not less than 12-inches nor more than 18-inches wide and have 3/4 inches of

soil firmly attached to the roots. The sod thickness shall not be deficient more than 1/4-inch from the required thickness at or just before placement. This 1/4-inch tolerance does not relieve the Contractor of the responsibility of cutting the sod a full 3/4-inches thick. The thickness of sod is measured by the thickness of soil firmly attached to the root system. The height of grass or thickness of thatch has no bearing on the determination of sod thickness. The sod and attached soil shall be free from noxious weeds: Common Bermudagrass, Nutsedge, Quackgrass, Garlic, Johnsongrass, Poison Ivy or Poison Oak, and Canada Thistle. Any lot of sod containing the following weeds either individually or collectively exceeding one percent of the total plant population by plant count or surface area covered shall be rejected as follows: Orchard-grass, Nimblewill, Annual Bluegrass, Crabgrass, Goosegrass and Foxtail. It shall not contain substances deleterious to growth or which might affect the survival or hardiness of the sod when transplanted.

2. Fertilizer shall be as specified in Section 02820.

3. Ground limestone shall be as specified in Section 02820.

4. Water shall be as specified in Section 02820.

5. Pegs shall be wooden wedges ½-inch x 1-inch x 6-inch to ½-inch x 1-inch x 12-inch.

6. Staples shall be made from No.11 or heavier steel wire bent to form a U. The staples shall average 1 to 1-1/2-inches wide. The staple shall be at least 6 inches long from top to bottom after bending.

3.0 EXECUTION

A. General

Sod sections or strips shall be of a length as may be readily lifted without breaking, tearing or loss of soil.

Sections or strips shall be cut by approved sod cutters, hauled or carried to storage piles or the point of installation without breaking, and set in final place as indicated on the Contract Documents and as directed by the County. All sod in stacks shall be kept moist and protected from exposure to the air, sun and freezing. Any sod permitted by the Contractor to dry out may be rejected whenever, in the judgement of the County, its survival after placing is rendered doubtful. No payment will be made for rejected sod.

In no event shall more than 48 hours elapse between the cutting and placement of sod.

During wet weather, sod shall be allowed to dry sufficiently to prevent tearing as a result of handling and placing. During dry weather it shall be watered before cutting and lifting to insure its vitality and prevent the dropping off of soil in handling.

B. Ground Preparation

Before placing sod upon any topsoiled surfaces, all shaping and dressing of such surfaces shall be completed. The completed areas to be sodded shall present a smooth, uniform, well tilled surface true to line and cross-section. Any raking required to accomplish this shall be done immediately before placing the sod.

All areas to be sodded shall be fertilized and limed in accordance with Section 02820. The lime and fertilizer shall be worked into the top 2 inches of soil before placing sod.

C. Sod Placement

No sod shall be placed between the dates of June 1st and August 15th inclusive unless adequate irrigation is available to establish the sod nor any time when the temperature is below 32°F. No frozen sod shall be used. No sod shall be placed upon frozen soil.

Sod shall be lifted from trucks or storage piles and placed by approved methods with close joints and no overlapping. All cracks between blocks of sod shall be closed with small pieces of sod. All sod shall be tamped or rolled after laying to close the seams between the pieces and press the sod tight against the ground. A hand tamper shall weigh approximately 15 pounds and have a flat surface of approximately 100 square inches. A roller shall weigh 40 pounds per foot of width. Any slipping of sod is to be corrected by the Contractor without additional compensation.

D. Watering

The sod shall be watered a minimum of 3 times after placement. The sod and soil directly beneath the sod shall be kept moist, by additional waterings if necessary, until acceptance or it has become established. The first watering shall be immediately after laying the sod. The second and third waterings shall be as necessary within 2 weeks of the first watering. No sod will be accepted until the water requirements have been satisfied, and the sod appears in good health.

E. Sodded Slopes and Drainage Ditches

On slopes 2:1 and steeper, sod shall be laid with the long edges parallel to the contour starting at the bottom of the slope. Successive strips shall be neatly matched and all joints staggered or broken. When placing sod in drainage ditches, the length of the strip shall be laid perpendicular to the direction of the flow of the water. Where the sod may be displaced during sodding operations, the workmen, when replacing it, shall work from ladders or treaded planks to prevent further displacement.

Each strip or section of sod placed on slopes 2:1 and steeper and surface drainage V-shaped or flat bottom ditches or gutters shall be staked securely with at least 2 wooden pegs spaced not more than 2-feet apart with the flat side against the slope and driven flush with the top of sod.

F. Repair of Defective Areas

Until the project is conditionally accepted, the Contractor will be required to repair or replace any sod that is defective or damaged.

G. Contractor's Responsibility

Before final acceptance of the Project, it shall be the responsibility of the Contractor to remove all heaved staples, which have been in place a minimum of six months, from areas to be mowed, or as directed by the County.

4.0 METHOD OF MEASUREMENT

A. Except when used as a contingent item or noted otherwise, measurement for sodding will not be made, as it shall be included in the unit quantity item for utility installation.

B. When used as a contingent item or noted otherwise, measurement for furnishing and installing sodding will be made on the surface area, measured in place, acceptably installed.

5.0 BASIS OF PAYMENT

A. General

1. Except when used as a contingent item or noted otherwise, payment for sodding will not be made, as it shall be included in the unit quantity item for utility work.

2. When used as a contingent item or noted otherwise, payment will be made at the unit price bid. The price bid shall include furnishing all labor, tools, equipment, and materials necessary to complete the work as shown and specified in strict accordance with the Contract Documents.

3. Payment will be made for contingent items when approved by the County.

B. Sodding

Payment for furnishing and installing sodding complete and in place will be made per square yard at the contingent prices established in the bid form. The price shall include all pegging, irrigation, traffic control, and incidental items to complete the sodding.

SECTION 02850
SOIL STABILIZATION MATTING

1.0 GENERAL

A. Description

Soil stabilization matting shall include, but not necessarily be limited to, furnishing and placing excelsior matting over seeded areas, and securing with wire staples on seeded areas in accordance with the Contract Documents. Soil stabilization matting shall only be furnished and installed if required by the Contract Documents or if directed by the Engineer.

B. Related Work Included Elsewhere

Turf Establishment; Section 02820.

C. Quality Assurance

The County will inspect all materials before, during, and after installation to ensure compliance with the Contract Documents.

2.0 MATERIALS

A. Materials Furnished by the County

The County will not furnish any materials for soil stabilization matting.

B. Contractor's Options

Not applicable.

C. Detailed Material Requirements

1. Excelsior Matting

a. Excelsior matting shall be machine produced from wood which has been properly cured to achieve adequately curled and barbed fibers. A maximum of 20% of the fibers may be less than 6 inches in length.

b. The excelsior matting shall have a uniform thickness and distribution of fibers throughout. The top and bottom of the excelsior matting shall be covered with a biodegradable extruded plastic netting having a maximum mesh opening of 2 inches x 2 inches. The average break strength of any two strands running lengthwise shall be 5 pounds minimum. The net shall be entwined with the excelsior to aid handling and provide sufficient

reinforcement against damage during handling and placement.

c. The excelsior matting shall be smolder resistant. A chemical treatment may be applied to the matting to make it smolder resistant. The chemical treatment, if used, shall be nonleaching, nontoxic to vegetation and germination of seed, and noninjurious to human skin. Rolls of the excelsior matting shall meet the following requirements: width - 48 $\pm$ 1 inch; weight - 0.60 pounds per square yard minimum at 0% moisture; nominal roll length - 180 feet.

2. Staples shall be as specified in Section 02830.

3. “T”-pin staples shall be made of No. 8 wire with an 8-inch leg, 4" head and a 1-inch secondary leg.

4. Materials required for seeding shall meet the requirements of Section 02820, except mulch binder will not be required.

3.0 EXECUTION

A. General

When topsoil is specified for areas where matting is being placed, topsoil placement shall be completed before the soil stabilization matting operations are started.

B. Seeding

Seeding shall be performed in accordance with the provisions of Section 02820, except that Fall season installation of soil stabilization matting shall end on September 30, and the rolling operation shall be omitted. The seed mixture shall be the same as in the areas immediately adjacent to the area where matting is to be placed.

C. Placing and Securing

The matting shall be placed prior to the first rain event or within 48 hours after seeding operations have been completed in the work areas, whichever is less. Matting shall be rolled on in the direction of the flow of water. Where more than one width of matting is required, the strips shall overlap at least 4 inches. Ends shall overlap at least 6 inches. The upgrade end of each strip of matting shall be turned down and buried to a depth of not less than 6 inches with the soil firmly tamped against it. Overlapping shall be done with the upgrade section on top. The County may require any other edge exposed to more than normal flow of water be buried in a similar manner. Edges of matting must be similarly buried around the edges of catch basins and other structures. Disturbed areas shall be fertilized and reseeded with the specified seed mixture for the area.

Matting shall be laid smoothly upon the seeded surface, and stretching shall be avoided. Matting shall be securely fastened with staples driven vertically into the soil, flush with the surface. Matting shall be in firm contact with the soil in its entirety. Staples shall be placed 2 feet apart along the edges and center of the matting. On all overlapping edges, staples shall be placed 18 inches apart. At all ends of the matting, staples shall be placed 6 inches apart.

D. Contractor's Responsibility

Before final acceptance of the Project, it shall be the responsibility of the Contractor to remove all heaved staples, which have been in place a minimum of 6 months, from areas to be mowed, or as directed by the County.

4.0 METHOD OF MEASUREMENT

A. Except when used as a contingent item or noted otherwise, measurement for soil stabilization matting will not be made, as it shall be included in the unit quantity item for all pipe and structures installed.

B. When used as a contingent item or noted otherwise, measurement for furnishing and installing soil stabilization matting will be made of the surface area, measured in place, acceptably installed.

5.0 BASIS OF PAYMENT

A. General

1. Except when used as a contingent item or noted otherwise, payment for soil stabilization matting will not be made, as it shall be included in the unit quantity item for pipe and structures installed.

2. When used as a contingent item or noted otherwise, payment will be made at the unit price bid. The price bid shall include furnishing all labor, tools, equipment, and materials necessary to complete the work as shown and specified in strict accordance with the Contract Documents.

3. Payment will be made for contingent items when approved by the County.

B. Stabilization Matting

Payment for stabilization matting will be made per square yard at the contingent prices established in the bid form. The price bid shall include all traffic control, and incidental items to complete the soil stabilization matting.

This page has been intentionally left blank.

SECTION 02860
TREE PROTECTION

1.0 GENERAL

A. Description

Tree protection shall consist of measures necessary for the survival of existing trees to remain in the vicinity of the proposed work, and where designated in accordance with the Contract Documents.

B. Related Work Included Elsewhere

1. Clearing and Grubbing: Section 02110

2. Trench Excavation, Backfill, and Compaction: Section 02250

2.0 MATERIALS

A. Materials Furnished by the County

Not Applicable

B. Contractor's Options

Not Applicable

C. Detailed Material Requirements

1. Orange Safety Fence

Orange safety fencing shall be 4-foot high blaze orange polyethylene plastic with 5-foot metal stakes, staked at maximum 10-foot intervals.

3.0 EXECUTION

The Contractor shall engage the services of a subcontractor, licensed as a Tree Expert by the Maryland Department of Natural Resources to perform the following:

1. Prior to commencing any construction activities, recommend procedures to compensate for loss of roots (if any) and perform initial pruning of branches and stimulation of root growth where removed.

2. Inspect all trees to be saved at the completion of construction and perform follow-up care for any damage incurred.

3. Submit a written Tree Protection Certificate that trees have been protected during the course of construction in conformance with recognized standards in the industry. Certify that damaged trees were promptly and properly treated.

B. Establishment of Tree Protection Areas

Prior to commencing construction activities, the Contractor shall meet with the Engineer and Owner to establish Tree Protection Areas. Prior to commencing construction activities, the Contractor shall install orange safety fencing around all tree protection areas. The orange safety fence shall encompass all trees to be saved within and along the designated work area. At a minimum, the orange safety fencing shall extend to the edge of the tree dripline.

C. Root Protection Measures

1. The Contractor shall protect tree root systems throughout the contract duration. Tree roots shall be protected from smothering, flooding, excessive wetting, from dewatering operations, off-site run-off, spillage and other activities which could be hazardous to tree roots. Removal of topsoil within the tree protection area is prohibited.

2. The Contractor is prohibited from parking any construction equipment, or from storing or stockpiling materials within the tree protection areas. Foot and vehicular traffic within the tree protection area is prohibited.

3. If any excavation will occur beneath the dripline of any tree to be saved, the Contractor shall first prune the tree roots along the proposed outside edge of trench. Root pruning shall consist of using a trenching machine, vibrating knife, or rock saw to a depth of 18-inches. When a trenching machine is used, the trench shall be immediately backfilled. Root pruning shall immediately be followed by fertilization.

D. Tree Pruning

1. All tree pruning shall be in accordance with the current edition of the National Arborist Association Standard for Pruning Shade Trees. All pruning tools and methods employed shall be in conformance with accepted arborcultural practices under the direct on-site supervision of the tree expert. Climbing spurs are prohibited.

2. Injuries to bark, trunk and limbs resulting from the construction shall be repaired by properly cutting, smoothing the wood if necessary, tracing the bark to the proper shape to ensure proper healing, and only using approved tools, materials and methods.

3. All pruned material and debris from the pruning operations shall be removed and disposed of at an approved waste disposal facility.

E. Damaged Tree Replacement

Existing trees that have been designated to be saved but which are damaged beyond repair due to the construction operations, as determined by the tree expert shall be removed and replaced at no additional cost to the County. Replacement trees shall be the same genus, species, variety and size as the removed tree, except those trees having a caliper greater than 4-inches. The tree caliper shall be the diameter measured 4 ½ feet above the ground. For trees with a caliper greater than 4-inches shall have a minimum of two smaller caliper trees with a minimum 3-inch caliper.

4.0 METHOD OF MEASUREMENT

Tree protection will not be measured as it is considered incidental to the unit quantity item for utility installation.

5.0 BASIS OF PAYMENT

Payment for Tree Protection will not be made, as it shall be included in the unit quantity item for utility installation.

This page has been intentionally left blank.

SECTION 02865
TREES AND SHRUBS

1.0 GENERAL

A. Description

This Section includes requirements for tree and shrub planting at locations indicated and approved by the Engineer in accordance with the Contract Documents.

B. Submittals

1. In accordance with the General Conditions, submit itemized list showing sources of all plant items.

2. Submit samples of additional landscape materials incorporated into the work, except the plants specified under this Section.

3. With each shipment submit invoice or stock order giving name of plants, date plants were dug for shipment and certification that plants are free from disease.

C. Reference Documents

1. Plant measurement size and grading shall be in accordance with the current edition of American Standard for Nursery Stock as approved by the American Nursery and Landscape Association (ANLA).

2. The current edition of Standardized Plant Names as adopted by the American Joint Committee on Horticulture Nomenclature, shall be the authority for all plant names.

D. Inspection and Acceptance of Plant Materials

1. Plants will be subject to inspection and approval at the place of growth or upon delivery for conformity to specification requirements as to quality, size and variety. Such approval shall not impair the right of inspection during the progress of work or right of rejection due to damage suffered in handling, transportation, or the planting process.

2. Rejected plants shall be removed immediately from the site by the Contractor.

3. All plants shall be labeled as to genus, species and size and shall bear an inspection certificate from the Board of the Department of Agriculture, or other State agency of the State within which the nursery, where the plants were grown, is located.

E. Guarantee

The guarantee for trees and shrubs shall be one year from the conditional acceptance date.

F. Plant Replacements

1. Replace dead, weak, diseased, improperly sized and improperly marked plants.

2. Replacement plants shall be of the same type and size as specified on the Drawings and shall carry the same guarantee as the original stock.

3. If plant rejection occurs during the planting season, the plants shall be replaced at once. If not, they shall be replaced during the next appropriate planting season. However, the Contractor may elect to allow the rejected plant to remain through the next complete growing season at which time, if found to be dead, in an unhealthy or badly impaired condition, the rejected plant shall be replaced by the Contractor at no cost to the County. When making plant replacements, replace planting mulch to its initial specified depth and follow all procedures outlined in Planting Procedures.

G. Licensing

All trees and shrubs shall be installed by a Maryland licensed Landscape Contractor with previous successful experience in the planting and survival of trees and shrubs.

2.0 MATERIALS

A. Topsoil

1. Topsoil shall meet requirements of topsoil as specified in Section 02820.

2. Topsoil shall be protected from the elements and shall not be handled or installed in a frozen or muddy condition.

B. Fertilizers and Additives

1. Fertilizer for trees and shrubs shall be an organic form such as cottonseed meal or bone meal, inorganic such as Super Phosphate. Do not use inorganic nitrite or nitrate fertilizers for starter solution in tree or shrub pits.

   a. super Phosphate shall be composed of finely ground phosphate rock as commonly used for agricultural purposes, containing not less than 18 percent available phosphoric acid.

   b. Bone Meal shall be commercial raw bone meal finely ground and shall be a minimum analysis of one percent nitrogen and 18 percent phosphoric acid.

2. Peat moss shall be a sphagnum peat moss and shall be free from woody substances.

3. Manure shall be dehydrated, well-rotted cow manure.

4. Anti-desiccant shall be “Wilt Pruf” or equal, delivered in manufacturer’s containers and used according to the manufacturer’s instructions.

C. Soil Mixes

1. Soil mix for all plants, except ericaceous plants shall consist of 200 pounds of manure and 36 cubic feet of peat moss of 12 cubic yards of topsoil. (Ericaceous plants include azaleas, rhododendron, pieres and other broad-leafed evergreens)

2. Soil mix for ericaceous plants shall consist of 50 cubic feet of peat moss to 12 cubic yards of topsoil, to which no lime has been added.

3. Soil mixtures shall be thoroughly mixed before using.

D. Mulch

1. All mulch shall be free of toxic substances or foreign materials that may harm plant life.

2. Mulch for tree, shrub planting and mulch bed preparation shall be ground bark or shredded bark.

   a. Ground bark shall be 100 percent true pine-bark with organic content of not less than 90 percent, with a white wood content not to exceed eight percent and shall be of a good uniform brown color. Note more than 50 percent shall be capable of passing through a ¾ inch sieve.

   b. Shredded bark shall be 100 percent true pine-bark peelings with organic content of not less than 90 percent. It shall be fibrous material of a good uniform brown color. Not more than 25 percent shall be able to pass through a ¾ inch sieve.

E. Plant Material

1. Unless otherwise approved, plants shall be nursery grown.

2. Plants shall be hardy, grown under climatic conditions similar to those in the locality of the project.

3. Plants shall be typical of their species or variety and shall have a normal habit of growth. They shall be sound, healthy and vigorous, well branched and densely foliated when in leaf. They shall be free of diseases and insect pests, eggs or larvae. They shall have healthy, well-developed root systems. Plants that are weak or which have been cut back from larger grades to meet specifications will be rejected.

4. Plants shall conform to the measurements specified on the Drawings with the following exceptions:

    a. Plants larger than specified may be used, if approved by the engineer, at no additional cost to the County. If the use of larger plants is approved, the spread of roots or ball of earth shall be increased in proportion to the size of the plant.

    b. Up to ten percent of undersize plants in any one variety or grade may be used provided that there are sufficient plants above size to make the average equal to or above specified grade and provided that undersized plants are larger that the average size of the next smaller grade.

5. Digging and Preparation of Shipment

    a. Bare root shrubs shall be dug with adequate fibrous roots retained and shall be delivered to the site of the project prior to the plant material coming into leaf. Pack roots of these plants in moist straw or peat moss immediately after digging.

    b. Balled and burlaped plants shall be dug with firm natural balls of earth, of sufficient diameter and depth to include most of fibrous roots.

    c. Container grown stock shall have been grown in a container large enough for the root system to develop sufficiently to hold its soil together firmly. No plants shall be loose in the container.

F. Planting Stakes and Appurtenances

1. Vertical stakes shall be rough-sawn straight grain oak, reasonably free of knot holes, bark, wane, warp, or splits.

2. Stake dimensions shall be 2-inch by 2-inch by 8 feet.

3. Stakes for guy wires shall be 1 ¾ inch by 1 ¾ inch by 30 inch.

4. Guy sire shall be pliable number 12 or 14 gauge galvanized wire.

5. Tree ties shall be 5/8-inch or ¾-inch reinforced corded garden hose.

6. Tree wrapping shall be first quality commercial paper tree wrap, in four inch to six inch strips, or clean new burlap, seven or eight ounce weight per square yard, treated with a solution containing a bactericide, fungicide and insecticide.

3.0 EXECUTION

A. Seasons for Planting

Trees and shrubs shall be planted between October 1st and May 15th only. No plants shall be planted during periods of freezing temperatures nor during frozen ground conditions. Preparations for planting may begin earlier than the specified season, provided the locations have been approved by the Engineer.

B. Handling and Protection of Delivered Plants

1. Roots or balls of plants shall be adequately protected at all times from sun and drying winds or frosts.

2. Balled and burlaped plants which cannot be planted immediately upon delivery shall be set on the ground and shall be well protected from soil, wet straw, peat moss or other acceptable material. Bare root plants that cannot be planted immediately shall be temporarily planted or heeled-in in trenches upon delivery.

3. Bundles of plants shall be opened and the plants separated before the roots are covered. Care shall be taken to prevent voids among the roots. During planting operations, bare roots shall be covered with canvas, straw or other suitable material. No plant shall be bounds with wire or rope at any time so as to damage the bark or break the branches.

C. Planting Procedures

1. Excavation for Planting

a. Notify the Engineer prior to beginning operations.

b. Provide stakes and stake out the locations for plant excavations as shown on the Drawings and as approved by the Engineer. Do not change locations without the approval of the Engineer.

c. Plant in individual excavations with vertical sides and horizontal bottom.

d. Excavations for trees shall be two feet greater in diameter than the ball of earth or spread of roots of the tree and sufficiently deep to allow for a layer of compacted soil mix beneath the ball or roots a minimum of six inches thick.

e. Excavations for shrubs shall be twelve inches greater than the spread of the roots and a minimum of eighteen inches below finished grade, or as necessary to allow a layer of compacted soil mix beneath the ball or roots a minimum of six inches thick.

f. Allow a tolerance of one inch for the above dimensions.

g. If excavations are made in advance of planting, backfill to grade with the specified soil mix, mark locations and record on the Drawings.

2. Planting

a. Remove seals and tags only after inspection and acceptance of plants by the Engineer.

b. After setting balled and burlaped plants, compact soil mix around based of balls, to fill all voids, up to one-half the depth of the balls, tamp and thoroughly water. Loosen burlap around the top half of the balls and spread out away from the ball. If too bulky, cut burlap away and remove. Remove balling and tying materials or containers, other than burlap and jute twine, from the excavation without damage to the soil ball. Cover all burlap and twine with at least two inches of soil mix. Then fill the remainder of the excavation with soil mix, tamp and again water, all within the same day of planting.

c. When container-grown plants are planted, remove the plant from the container, so as not to damage the root ball, and plant as outlined for balled and burlaped plants.

d. When bare root plants are set, spread the roots of the plant carefully in their natural positions and work soil mix around the roots, thoroughly tamp into place and water, all within the same day of planting.

e. Watering shall mean full and thorough saturation of backfill in the excavations the day the plants are planted. Apply water by container or open-end hose under low pressure only.

f. When planted, watered, and fully settled, the plants shall be vertical and the back fill shall be flush with the surrounding surface.

g. Form a soil shoulder at least three inches high around the outside of the excavation above finished grade, to entrap water.

h. Wrap trees over 1 ½ inch caliper with the specified wrapping material. Wrap spirally from the ground line up to the lowest main branches and overlay approximately two inches. Secure wrapping material, at the bottom, middle and top with ties spaced a maximum of two feet apart.

i. Mulch completed plantings with the specified mulching material. Spread mulch evenly to a minimum thickness of three inches over the entire area of the filled excavation and for shrub in beds, the entire area of the shrub bed. Apply mulch within four days after planting.

j. Prune each tree and shrub in accordance with the American Association of Nurseryman Standards to reserve the natural appearance and character of the plant. Do not cut leaders of shade trees. Remove dead wood, broken or badly bruised branches, or suckers using clean, sharp pruning tools. Treat surface of cuts over one inch diameter with specified tree wound dressing covering all exposed cambium.

3. Clean Up After Planting

a. Remove waste materials continuously and promptly.

b. Regrade and restore existing turf areas damaged and seed or sod when so directed, at no cost to the County.

D. Maintenance

1. Maintenance of planting material shall commence immediately after each plant is planted and shall continue until final acceptance. During such time, the Contractor shall perform all work necessary to establish and maintain the plants in a live, health condition. Maintenance shall include the following:

a. Water at the end of each 14 day period, if less than one inch of precipitation is recorded by the National Weather Service in the Metropolitan Area for that period. Each tree shall receive at least five gallons of water and each shrub shall receive at least two gallons.

b. Clearing plant mulched area of weeds and grasses. Remove weeds when they have attained a height of four inches. The use of herbicides to control weeds and grasses will be acceptable only if all Maryland Department of Agriculture regulations are followed.

c. Pruning of dead material and removal of succoring growth.

d. Resetting settled plants to proper grade.

e. Reshaping and remulching of washed out planting saucers.

f. Tightening and repairing of guying and staking.

g. Fertilizing of nutrient deficient plants.

h. Replacing of dead, weak, or diseased plants.

E. Final Inspection and Acceptance

1. Within twenty days of the end of the one-year guarantee period as described herein, the Engineer will inspect planting material. This inspection will be scheduled within ten days after the Contractor submits a written notice requesting such inspection.

2. If any tree or shrub must be replaced as determined by the County, the Contractor shall replace as described hereinbefore. The warranty period shall be extended for one additional growing season until all trees and shrubs have successfully survived.

4.0 METHOD OF MEASUREMENT

Measurement for furnishing and installing trees and shrubs will be made on the basis of each tree and shrub installed at the locations and spacing depicted in the Contract Documents, and accepted by the Owner.

5.0 BASIS OF PAYMENT

Payment for the tree and shrub installation will be made at the unit price bid per each tree or shrub. The price bid shall include furnishing all labor, tools, equipment, and materials necessary to complete the work as shown and specified in strict adherence with the Contract Documents.

SECTION 02870
FENCES

1.0 GENERAL

A. Description

This work will include, but not necessarily be limited to, the construction of fence and gates in accordance with, and in reasonably close conformance to, the lines and grades shown on the Contract Documents.

B. Related Work Included Elsewhere

1. Clearing and Grubbing: Section 02110

C. Quality Assurance

The County will inspect all materials before, during and after installation to ensure compliance with the Contract Documents.

2.0 MATERIALS

A. Materials Furnished by the County

The County will not furnish any materials for fence installation.

B. Contractor's Options

None.

C. Detailed Material Requirements

1. All fencing shall consist of chain link fabric topped with three strands of barbed wire mounted on extension arms projecting outward at 45°.

2. Barbed Wire

The barbed wire shall consist of three lines of aluminum coated steel barbed wire which is to be of the four point pattern composed of two strands of 12-1/2 gage line wires with 14 gage aluminum barbs spaced on approximately 5 inch centers. Minimum weights of aluminum coating shall be 0.30 ounces per square foot of wire surface.

3. Chain Link Fabric

a. Fabric shall be aluminum coated steel chain link, No. 9 gage wire woven in a

2 inch mesh. Top and bottom selvages shall be barbed. The fabric shall conform to ASTM Designation A491-74 in its entirety.

b. The aluminum coating shall be a minimum of 0.4 ounces per square foot of wire surface for #6 and #9 gage fabric and 0.35 ounces per square foot for #11 gage. The weight of coating shall be determined by the strip test as defined in ASTM Specifications A428-68.

4. Fabric Connections

The chain link fabric shall be securely fastened to all terminal posts using 3/16" x 3/4" stretcher bars and heavy 11 gage tension bands. The fabric shall be fastened to all intermediate posts and top rails with #11 gage tie wires.

5. Tension Wire

The top and bottom tension wire shall be No. 7 gage aluminum coated spring coil or crimped wire. Minimum weight of aluminum coating shall be 0.40 ounce per square foot of wire surface.

6. Framework

a. All posts and framework (including gates) shall be hot dipped zinc coated with a minimum of 1.8 ounces per square foot of surface and shall conform to ASTM A120-78.

b. Terminal and corner posts shall be nominal 3-inches outside diameter, nominal weight 5.79 pounds per linear foot.

c. Line posts shall be nominal 2 ½-inches outside diameter, nominal weight 3.65 pounds per linear foot.

d. The top rail and brace pipes shall be nominal 1-5/8-inches outside diameter standard weight pipe, wt. 2.27 pounds per linear foot.

7. Gates

a. Posts for swing gates shall be 4-inch O.D. standard weight pipe, wt. 9.1 pounds per linear foot.

b. Gate posts shall be equipped with top cap so designed to prevent moisture from entering the post.

c. Gate frames shall be nominal 2-inches outside diameter standard weight pipe, wt. 2.72 pounds per linear foot. Gates may be fabricated using welded construction or heavy pressed steel or malleable corner fittings securely riveted. Hinges shall be of sufficient strength and design to permit easy and

trouble-free operation. Gates shall have center plunger rod to positively hold gates in open or closed positions. Gates shall have barb wire. All gates shall be equipped with a positive type latching device with a means for padlocking. An approved padlock with three keys shall be provided for each gate. Locks shall be keyed to the Harford County system.

8. Portland Cement Concrete

Portland cement concrete for fence post encasement shall be Mix No. 1 as specified in Section 03300.

3.0 EXECUTION

A. General

1. The fence shall be erected at locations shown on the Plans to grades conforming to existing ground contours by experienced fence erectors. The bottom of the fabric shall be placed a normal distance of 1-inch above the finished grade, however, over irregular ground, a minimum clearance of 1-inch and a maximum clearance of 6-inches will be permitted for a horizontal distance not to exceed 8 feet.

2. Any excavation or backfill required in order to comply with these provisions shall be made as approved by the County. The fence shall be true to line, taut, and shall comply with the best practice for chain link fence construction. For site fencing projects, the fence fabric shall be placed on the outside of the posts.

3. All posts shall be plumbed and placed at the specified spacing shown on the Contract Documents. Spacing of posts shall be as uniform as practicable under local conditions. The distance between line posts shall not exceed 10 feet.

4. Terminal posts shall be installed at all ends, abrupt changes in grade, and at changes in the horizontal alignment greater than 10 degrees. In no case shall the distance between terminal posts exceed 500 feet.

5. Post lengths must be adequate in all cases to accommodate the fabricated width of the fence fabric without stretching or compressing the fabric and to obtain, as a minimum, the distance required below the bottom of the fabric.

6. Horizontal brace rails shall be installed at all gate, pull, and corner posts. Horizontal brace rails with diagonal truss rods and turn buckle shall be installed at all terminal posts. Sufficient braces shall be supplied to allow complete bracing from each terminal post to all adjacent line posts. Braces shall be securely fastened to posts by heavy pressed steel and malleable fittings.

7. Fabric shall be tied to brace and top rails at 2-foot intervals maximum. Stretcher bars shall be attached to terminal posts by connectors equally spaced at 12-inch centers maximum. The fabric shall be fastened to all intermediate post at a spacing not to exceed 14-inches.

8. Tension wire shall be stretched taut and run continuously between terminal post near the top and bottom of the fabric and securely fastened to each intermediate post.

9. Gates shall be installed so as to be easily opened and closed by one person and shall be capable of being swung back parallel with the fence unless otherwise noted. Gates must be properly braced to eliminate any possible sagging condition.

B. Concrete

1. Concrete footings shall be constructed in accordance with dimensions shown on the Standard Details. Posts shall be centered in cylindrical concrete footings. The concrete shall be thoroughly compacted around the post by tamping or vibrating. The finish top surface shall be a smooth finish, slightly above the ground line, and uniformly sloped to drain away from the post. The post shall not be disturbed in any manner within 72 hours after the individual post footing is completed.

2. Hand mixed concrete shall not be used without written permission of the County. If permitted, the hand mixed batch shall not exceed ½ cubic yard.

4.0 METHOD OF MEASUREMENT

A. Chain Link Fence

Measurement for chain link fence will be made of the length of fence of various sizes installed complete and accepted. Measurement will be made to the centers of end posts.

B. Terminal Posts

No measurement of terminal posts will be made.

C. Line Posts

No measurement of line posts will be made.

D. Gates

No measurement of gates will be made.

5.0 BASIS OF PAYMENT

A. General

1. Payment will be made at the unit prices bid. The prices bid shall include and cover furnishing all labor, tools, equipment, and materials necessary to complete the work as shown and specified, in strict accordance with the Contract Documents.

2. Payment will be made for contingent items when approved by the County.

B. Chain Link Fence

Payment for chain link fence will be made at the price bid per linear foot for fence of the size and type specified and shall include traffic control and the furnishing and installation of all terminal posts, line posts, gates, chain line fabric, bracing, fittings, locks, and incidental items to complete the fence installation.

C. Terminal Posts

Payment for furnishing and installing terminal posts will not be made, for it will be incidental to chain link fence installation.

D. Line Posts

Payment for furnishing and installing line posts will not be made, for it will be incidental to chain link fence installation.

E. Gates

Payment for furnishing and installing gates will not be made, for it will be incidental to chain link fence installation.

This page has been intentionally left blank.

SECTION 03200
CONCRETE REINFORCEMENT

1.0 GENERAL

A. Description

Concrete reinforcement shall include, but not necessarily be limited to, furnishing and placing various types and/or sizes of steel reinforcing for embedment in Portland cement concrete as specified in the Contract Documents.

B. Related Work Included Elsewhere

1. Cast-In-Place Concrete: Section 03300

2. Pre-Cast Concrete: Section 03400

C. Quality Assurance

The County will inspect all materials before, during and after placement to ensure compliance with the Contract Documents.

2.0 MATERIALS

A. Materials Furnished by the County

The County will not furnish any materials for concrete reinforcement.

B. Contractor's Options

Substitution of smaller size bars will be permitted only upon specific authorization by the County. Substituted bars shall provide a steel area equal to or larger than that called for by the design provided the spacing is not reduced to a point where the clear distance between the bars is less than one and one-half times the nominal diameter of the bars, nor one and one-half times the maximum size of the course aggregate, nor 1 ½ inches, and further provided that the planned cover is maintained. No additional compensation will be allowed because of the substitution of larger areas of steel.

C. Detailed Material Requirements

1. General

Reinforcing steel shall conform to the requirements of ACI 318.

2. Bar Reinforcement

Bar reinforcement shall consist of deformed bars meeting the requirements of AASHTO M 31, Grade 60. Grade 40 may be used for #5 and smaller bars where indicated on the Plans.

3. Tie or Dowel Bars

Tie or dowel bars shall be round steel bars meeting the requirements of AASHTO M 31, Grade 40 or ASTM A 36.

4. Welded Steel Wire Fabric

Welded steel wire fabric shall meet the requirements of AASHTO M 55. When galvanizing is specified, the fabric shall be galvanized after fabrication.

5. Welded Deformed Steel Wire Fabric

Welded deformed steel wire fabric shall meet the requirements of AASHTO M 221.

6. Galvanizing

Galvanizing for deformed steel bars shall be in accordance with ASTM A 153.

3.0 EXECUTION

A. Fabrication

1. General

After bar lists and bending diagrams have been approved, fabricate each unit of reinforcement to the type, shape, size, grade, and dimensions shown on the approved shop drawings.

2. Cutting and Bending

Perform cutting and bending of reinforcing bars before shipment to the site. Bend all bars cold in a manner that will not injure the material and in accordance with the Manual of Standard Practice of the Concrete Reinforcing Steel Institute.

B. Shipping, Handling, and Protection of Material

Reinforcing steel bars shall be shipped in standard bundles and tagged and marked in accordance with the provisions of the Code of Standard Practice of the Concrete Reinforcing Steel Institute. Bundles shall be kept intact and material undamaged and properly identified until ready for use.

Reinforcing steel bars shall be stored on blocking, racks, or platforms so as not to be in contact with the ground.

Bars shall be kept free from dirt, paint, oil, grease, loose or thick rust, detrimental mill scale, or other foreign substances. However, when steel has on this surface detrimental rust, mill scale, dust, or dirt, it shall be cleaned by a method approved by the County.

C. Placing and Fastening

The placing of bars shall conform to the recommended practices in “Placing Reinforcing Bars” as published by the Concrete Reinforcing Steel Institute.

Reinforcing steel shall be accurately placed in the position shown on the plans and firmly held during the depositing and setting of the concrete. Cover, or the distance between the external face of the bar and the face of the finished concrete, shall be as indicated on the Plans. Reinforcing steel bars embedded in concrete shall not be bent after they are in place. Bars shall be tied at all intersections with 16 ½ gage black annealed wire except that where spacing is less that 1 foot each direction alternate intersections need not be tied. All intersections shall be tied in the top mat of reinforcement placed on the top slabs of box culverts. Abrupt bends shall be avoided except where one steel bar is bent around the other. Stirrups and ties shall always pass around the outside of main bars and be securely attached thereto. All reinforcing steel shall be securely held at the proper distance from the forms by means of plastic coated steel chains. Blocks for holding reinforcement away from contact with earth shall be precast concrete blocks of approved shape, mix, and dimensions and shall have tie wires embedded in them. Layers of bars shall be separated by approved plastic coated metal chairs or bolsters.

Any broken or damaged concrete spacer blocks shall be removed before concrete is placed. The use of pebbles, pieces of broken stone or brick, metal pipe, or wooden blocks as spacers will not be permitted. Reinforcing steel when placed in the work shall be free from flake rust, dirt, and foreign material before any concrete is placed. Any mortar which may be adhering to the reinforcing steel shall be removed. No concrete shall be deposited until the County has inspected the placing of the reinforcing steel and given permission to place the concrete. The Contractor shall allow the County ample time after the reinforcement and forms are in place to conduct the inspection. Any bars of incorrect size, length, or shape shall be removed and replaced with correct bars. Any bars located or spaced incorrectly shall be relocated or spaced correctly before approval is given to place concrete, and such replacements and corrections shall be at the Contractor’s expense. All concrete placed in violation of these provisions shall be rejected and removed.

Contractor shall allow the County ample time after the reinforcement and forms are in place to conduct the inspection. Any bars of incorrect size, length, or shape shall be removed and replaced with correct bars. Any bars located or spaced incorrectly shall be relocated or spaced correctly before permission is given to place concrete, and such replacements and corrections shall be at the Contractor’s expense. All concrete placed in violation of these provisions shall be rejected and removed.

D. Splicing

Reinforcement shall be furnished in full lengths as indicated on the Plans. Splicing, except where shown on the Plans, will not be permitted without written approval from the County and if additional splices are used, the additional weight occasioned by such splices shall be at the Contractor's expense.

All splices shall conform to Class "B" in ACI 318 or as shown on the Plans. Splices shall be well distributed where conditions permit. Except where otherwise shown on the Plans, lap splices shall be made with the bars placed in contact and wired together. Lapped splices for reinforcement shall not be used for bar sizes larger than No. 11.

No welding of reinforcing steel or attachments thereto will be permitted without written authorization by the County, unless so indicated on the Plans. Welding, if permitted, shall be in accordance with AWS D1.4.

4.0 METHOD OF MEASUREMENT

Measurement for concrete reinforcement consisting of deformed bars, or wire mesh will not be made, but shall be included in the unit or lump sum price bid for cast-in-place concrete.

5.0 BASIS OF PAYMENT

A. General

1. Payment for concrete reinforcement consisting of deformed bars, or wire mesh will not be made as such, but the cost thereof shall be included in the lump sum price bid for cast-in-place concrete.

SECTION 03300
CAST-IN-PLACE CONCRETE

1.0 GENERAL

A. Description

Cast-in-place concrete shall include, Portland cement concrete and the construction of small below grade Portland cement concrete structures constructed to the lines and dimensions and at the locations shown on the Plans and in accordance with the Contract Documents.

All concrete work and/or sealing work around built-in items and penetrations shall be performed as required to insure that groundwater and/or surface water does not intrude into any dry well, equipment rooms, pipe galleries, habitable areas or other generally dry areas.

B. Related Work Elsewhere

1. Trench Excavation, Backfill, and Compaction: Section 02250
2. Aggregate Backfill: Section 02240
3. Water Mains: Section 02660
4. Water Valves and Appurtenances: Section 02662
5. Fire Hydrants: Section 02666
6. Sanitary Sewer Force Mains: Section 02720
7. Concrete Reinforcement: Section 03200

C. Quality Assurance

The County will inspect all materials before, during and after installation to ensure compliance with the Contract Documents.

All concrete structures shall be inspected to insure that there is no water entering the structure, including the dry well, equipment room, pipe gallery, habitable areas or other usually dry areas. It shall be the Contractor's responsibility to repair, renovate and replace concrete and/or foundation cracks, by crack injection or other means, as determined by field survey.

2.0 MATERIALS

A. Materials Furnished by the County

1. The County will not furnish any materials for Portland cement concrete.
2. The Contractor may purchase water from the County's potable water system in accordance with the current County policies and procedures.

B. Contractor's Options

1. The Contractor may furnish higher strength concrete than specified.

C. Detailed Material Requirements

1. Portland Cement

Portland cement shall be in accordance with AASHTO M 85 with the fineness determined in accordance with AASHTO T 153 and the time of setting determined in accordance with AASHTO T 131.

2. Fine Aggregate

Fine aggregate shall meet the gradation requirements contained in Table 03300-1 and shall be in accordance with the quality requirements of AASHTO M 6.

3. Coarse Aggregate

Coarse aggregate shall be in accordance with the Class A quality requirements of AASHTO M 80 using sodium sulfate to determine the soundness. Grading of aggregate shall be in accordance with AASHTO M 43, size numbers 57, 67, or 7, Table 03300-1.

4. Aggregate Gradations

TABLE 03300-1
Mass Percent Passing

Sieves Sizes U.S. Standard	AASHTO M 43		
	No. 57	No. 67	No. 7
1 ½ inch	100	-	-
1 inch	95-100	100	-
¾ inch	-	90-100	100
½ inch	25-60	-	90-100
3/8 inch	-	20-25	40-70
No. 4	0-10	0-10	0-15
No. 8	0-5	0-5	0-5
No. 16	-	-	-
No. 50	-	-	-
No. 100	-	-	-

5. Water shall be Potable.

6. Admixtures

Admixtures to be used in concrete (except for air entrainment) shall be subject to written prior approval by the County. Admixtures for concrete shall not contribute more than 200 ppm of chlorides based on the cement content when tested in accordance with MSMT 610. The relative durability factor of concrete with Admixtures shall be determined in accordance with ASTM C 666, Procedure B.

a. Air Entraining

Air entraining admixtures shall be in accordance with AASHTO M 154.

b. Admixtures

Admixtures shall be in accordance with AASHTO M 194.

c. High Range Water Reducing Admixtures

When specified, high range water reducing admixtures shall be liquid and meet the requirements of AASHTO M 194, Type F or G. When this material is used in patching, the admixture shall be liquid and meet the requirements of AASHTO M 194, Type F, for air entrained concrete with the following exceptions.

1. The water content shall be a maximum of 85% of that of the control.
2. The relative durability factor shall be a minimum of 90 when tested in accordance with ASTM C 666, Procedure B.
3. The 12 hour compressive strength for Type F admixture shall be 180% of that of control.

Additionally, the admixture shall be nonfoaming when tested in accordance with ASTM D 1173. It shall not contribute more than 200 ppm of chlorides based on the cement content when tested in accordance with MSMT 610.

7. Fly Ash

Fly Ash may be used with written prior County approval.

Fly ash shall be in accordance with AASHTO M 295, pozzolan Class C or F.

8. Concrete Reinforcement

Concrete reinforcement shall be the size and type specified and shall be in accordance with the requirements of Section 03200.

9. Waterstops

Waterstops shall be made of rubber or polyvinyl chloride. The rubber type may be natural rubber, suitable synthetic rubber, or a combination of natural and suitable synthetic rubber. The polyvinyl chloride shall contain at least 90% virgin polyvinyl chloride. The remaining 10% may include one or more monomers copolymerized with vinyl chloride or consist of other resins mechanically blended with polyvinyl.

The waterstop shall be of the shape and dimensions shown on the plans. The cross section shall be uniform along the length and transversely symmetrical so that the thickness at any given distance from either edge of the waterstop shall be uniform. The waterstop shall be dense, homogeneous, and free from holes and other imperfections.

The waterstop shall meet the following requirements:

Tensile Strength, ASTM D 412, psi min.	2000
Elongation at Break, ASTM D 412, % min.	300
Hardness, Rubber, Type A Durometer, ASTM D 2240	55±5
Hardness, PVC, Type A Durometer, ASTM D 2240	75±5

10. Forms

Forms shall be constructed of wood, steel, or other approved material. Wall ties approved by the County shall be used where necessary. Surfaces of metal forms shall be free from irregularities, dents, and sags. Knot holes and broken places in wood forms shall be covered with metal patches. Lumber used in forms for exposed surfaces shall be smooth, uniform, and free from loose knots and other defects that would show defects in the finished concrete surfaces. For unexposed surfaces and rough work square-edge lumber may be used. By unexposed surfaces is meant any concrete surface not exposed to view on completion of the project. Interior and exterior corners shall have chamfer strips. The Contract may be required to submit details of forming to the County before work proceeds.

11. Form Release Compounds

Form release compounds shall effectively prevent the bonding of the concrete to the forms. The form release compounds shall not cause discoloration of the concrete nor adversely affect the quality or rate of hardening at the interface of the forms. The compounds will be tested in accordance with MSMT 503.

12. Portland Cement Concrete Curing Materials

Curing materials shall be burlap cloth, sheet materials, or liquid membrane-forming compounds.

a. Burlap

Burlap cloth shall be made from jute or kenaf and shall be in accordance with AASHTO M 182, Class 1, 2, or 3.

b. Burlap Polyethylene Sheeting

Sheet material shall be in accordance with AASHTO M 171 except that tensile strength and elongation requirements are waived. White burlap polyethylene sheeting shall give a finished product weight of not less than 10 ounces per square yard.

c. Liquid Membrane

Liquid membrane-forming compounds shall be in accordance with AASHTO M 148.

Field control testing of the white pigmented curing compounds will be on the basis of weight per gallon. The samples shall not deviate more than plus or minus 0.3 pounds per gallon from the original source sample.

13. Vapor Barrier

a. Building paper shall be Sisal-Kraft building paper, conforming to requirements of FSS UUB 790A.

b. Polyethylene sheeting shall be 0.006 inch thick, conforming to requirements of ASTM D 2103.

3.0 EXECUTION

A. General

1. Concrete shall be mixed as specified in this Section and shall be delivered to the site in accordance with ASTM C 94.

2. The Contractor will be required to use concrete equipment of sufficient capacity to complete any unit, as indicated on Contract Documents, in one continuous operation consistent with placement operations as approved by the County.

3. Hand mixing may be permitted with written approval of the County for small volumes of concrete. However, its intended use is for small isolated areas where structural integrity is not critical.

4. Before placing any concrete, the Contractor shall install all sleeves, anchors, fittings, pipes, conduits, or other special devices called for in the Contract Documents. No concrete shall be placed until this work has been approved by the County. The Contractor shall ascertain that all material to be installed in the concrete by other trades has been placed prior to pouring any concrete. Any concrete poured without prior provisions having been made for inclusion of the indicated inserts and materials will be subject to rejection by the County and/or correction at the Contractor's expense.

5. Coat aluminum accessories and embedded items with an inert compound capable of effecting isolation of the deleterious effect of the aluminum on the concrete.

6. Design loads may not be imposed on cast-in-place concrete until the concrete has cured to its design strength. This includes the pressurization of pipelines. The concrete strength shall be verified by the sampling of fresh concrete and completion of concrete test cylinders, as indicated in paragraph B below.

B. Concrete Mixes

The concrete shall be proportioned by weight. Water and admixtures may be proportioned by volume or weight. The mix shall be homogeneous, placeable, and uniformly workable.

Coarse aggregate shall be maintained at a uniform moisture content at least equaling its absorbed moisture. Water, if used for wetting, shall meet the requirements of this Section.

Portland cement concrete mixtures shall conform to the Maryland SHA standard specifications for construction and materials (October 1993) and are noted below for your convenience.

Mix No.	28 Day Specified Compressive Strength psi (MPa)	Min. Cement Factor pounds per cubic yard (kg/m^3)	Coarse Aggregate M 43	Max. Water/Cement Ratio by wt	Slump Range In. (mm)	Total Air Content %
1	2500 (17.2)	455 (270)	57, 67	0.55	2-5 (50-125)	5-8
2	3000 (20.7)	530 (315)	57, 67	0.50	2-5 (50-125)	5-8
3	3500 (24.1)	580 (345)	57, 67	0.50	2-5 (50-125)	5-8
4	3500 (24.1)	615 (365)	57, 67	0.55	4-8 (100-200)	N/A
5	3500 (24.1)	580 (345)	7	0.50	2-5 (50-125)	5-8
6	4500 (31.0)	615 (365)	57,67	0.45	2-5 (50-125)	5-8
7	350 (2.4) split tensile	580 (345)	57	0.50	1-1/2-3 (40-75), 2-1/2 max if slip-formed	5-8

Note 1: When concrete is exposed to sewage or water exceeding 15000 ppm sodium chloride content, Type II cement shall be used.

Note 2: When synthetic fibers are used, the slump shall not exceed 5 in.

C. Mixers and Agitators

1. All mixers shall display a current Maryland State Highway Administration approval stamp. Mixers and agitators and mixing and delivery of ready-mixed concrete shall meet the requirements of AASHTO M 157 with the following exceptions:

   a. Transit mixed concrete will not be permitted. The following requirements shall apply when additional water is added on the job site:

      1. No water shall be added after partial discharge of the batch.

      2. The water-cement ratio shall not be exceeded.

      3. Acceptance will be based upon a retest of the slump and air content.

   b. All concrete shall be discharged within 1 hour after the mixing water is added or 1-1/2 hours after the addition of the cement to the aggregates, whichever is the lesser time.

   c. No mixer or agitator containing free water in the drum shall be loaded.

D. Hand Mixing Portland Cement Concrete

1. No hand mixing of concrete shall be allowed without first obtaining permission from the County.

2. The amount of concrete shall be small enough in quantity that in the judgment of the County, the delivery of the same is impractical.

3. Scheduling of mixing and placing shall be coordinated with the resident County inspector so that all work by the contractor is under the supervision of the resident inspector.

4. Under no circumstances shall hand mixing of concrete be allowed for any permanent buttresses that will not be subject to the 200 pound plus pressure test.

E. Forms

1. Design Criteria

   Design of the forms shall be the Contractor's responsibility. Forms shall be designed for strength and deflection to resist all loads and pressure of wet concrete. The design shall provide for rate of pour, effect of vibration, and use of retarders, etc. In addition, horizontal surfaces shall have applied to them a live load of 50 pounds per square foot. This load is to be used in the design of the forms for strength only and is not to be used in computing deflections. However, in the design of forms for horizontal slabs, in no case shall this loading be less than a total of 120 pounds per square foot. (This does not apply to form joists, form wales, etc.) No form member or support thereof shall have a deflection in excess of L/240 of its

span length, and in no case shall said deflection exceed 1/4 inch.

2. Concrete forms shall be built true to line and grade, mortar-tight, and sufficiently rigid to prevent displacement or sagging between supports. All form work shall be provided with adequate clean out openings to permit inspection and easy cleaning after all reinforcement has been placed.

3. Forms at Construction Joints and Corners

   At construction joints in concrete, ties or bolts shall be provided 3 to 6 inches from each side of the joint for tightening the forms against the hardened concrete (first pour) immediately prior to placing fresh concrete. At joints where forms have been removed and reconstructed, the form surface shall extend over the concrete already in place; and the forms shall be drawn tightly against the previously placed concrete immediately prior to placing the fresh concrete. Where forms have been extended, the forms shall be retightened against the concrete already in place immediately before placing fresh concrete.

   Forms shall be filleted at all exposed sharp corners, except when otherwise indicated on the Plans and shall be given a bevel or draft in the case of all projections, such as girders, copings, etc., sufficient to insure easy removal.

4. Bracing and Maintenance

   Special attention shall be paid to bracing; and where the forms appear to be insufficiently braced or unsatisfactorily built, either before or during the placing of concrete, the County will order work stopped until the defects have been corrected. All forms shall be so maintained as to eliminate the formation of joints due to the shrinkage of lumber. All forms shall be set and maintained true to the line designated until the concrete is sufficiently hardened. For narrow walls where access to the bottom of the forms is not readily attainable provide temporary openings and at such other locations as may be necessary to clean out all chips, dirt, sawdust, or other extraneous material immediately prior to placing concrete. Existing forms may be extended after the concrete in said forms has been place for at least 12 hours, provided such form extension can be done without any damage to the previously placed concrete.

   Unit stresses for forms, form supports, false work, and bracing shall not exceed the AASHTO Specification.

5. Form Removal

   All forms for concrete work shall be removed and disposed of by the Contractor after form work requirements have been compiled with, except those which are designated to remain in place.

   Forms shall remain in place a sufficient time to allow the concrete to set properly

and the Contractor shall assume all responsibility for removing same. In no case shall forms be removed until concrete has sufficient strength to carry its own weight and the loads upon it with safety. The Director, however, may, when he deems it advisable, order the forms to remain for a longer time, but his acquiescence in permitting the removal of forms shall not relieve the Contractor of responsibility for same.

Forms for pipe end walls may be removed after the concrete has been in place for a period of 24 hours unless it is necessary to protect the concrete against cold weather, in which case the forms shall remain in place for the entire protection period.

Forms for vertical surfaces shall remain in place for a period of 48 hours. If, however, forms are removed before the concrete is 7 days old, the vertical surfaces shall be immediately covered with curing material and the concrete kept wet and so covered until the concrete is 7 days old. Horizontal form, and false work, carrying loads shall remain in place for a minimum of 7 days and until the concrete has attained a compressive strength of 3000 psi. Internal bulkheads used for forming construction joints, contraction joints, expansion joints, etc. may be removed after the concrete has been in place for 24 hours, if it is necessary to do so for the continuance of the work without interruption.

Special care shall be taken not to break concrete edges in taking down forms. Any portion of concrete damaged while stripping forms may be ordered torn down and recast at the discretion of the County. Upon removal of forms, the County shall be notified by the Contractor. The County after inspecting the surfaces newly stripped, will designate what honey-combed parts, if any, shall be pointed up and how the slightly damaged portions of concrete, if any, shall be repaired or replaced. No freshly stripped surfaces shall be pointed up or touched in any manner before having been inspected by the County.

In all cases, the Contractor shall assume all responsibility arising from the removal of forms and shall assure himself that the concrete is properly cured to sustain loads before forms are removed.

F. Concreting

1. Before placing concrete, all sawdust, chips, and other construction debris and extraneous matter shall be removed from interior of forms. No struts, stays, and braces, serving temporarily to hold the forms in correct shape and alignment, pending the placing of concrete at their locations, will be permitted.

   All concrete shall be placed in the dry, unless Plans and/or “Special Provisions” require the placement of tremie concrete.

   All concrete shall be placed in a continuous operation.

Concrete, after being placed in the forms, shall be thoroughly compacted and shall be spaded, tamped, or vibrated to the satisfaction of the County.

Chuting of concrete will be allowed only as approved by the County. No concrete shall have a free fall of over three (3) feet and if this height is exceeded, it shall be conveyed in place by approved spouts and chutes. Open troughs and chutes shall be metal or metal lined. Where steep slopes are required, the chute shall be equipped with baffles or be in short length that reverse the direction of movement. All chutes, troughs and pipes shall be kept clean and free from coatings or hardened concrete by thoroughly flushing with water after each run.

2. Retempering concrete by the addition of water shall not be permitted. The addition of water to the batch in the mixer, after ten (10) minutes have elapsed after the initial charging or the addition of water at any time after the concrete has been removed from the mixer shall be construed as retempering. Batches of concrete prepared contrary to these specifications shall be rejected and immediately removed from the project.

   The concrete shall be mixed only in the quantity required for immediate use and concrete not in place within one hour from the time the ingredients were charged into the mixing drums, or that has developed initial set, shall not be used.

3. Cold Weather Specifications

   Under no circumstances will concrete be permitted to be placed on frozen soil. Construction of plain and reinforced cement concrete pavements, curbs, gutters, combination curb and gutters, and sidewalks, except by specific written authorization and under very definite Special Provisions, shall not be continued when a descending air temperature in the shade and away from artificial heat falls below 45^0F, or resumed until an ascending air temperature in the shade and away from artificial heat reaches 40^0F.

   If temperature is below 45^0F then one or more of the following methods shall be used to obtain the required temperature all as approved by the County.

   a. When the method of heated mixing water is used, the water shall not be above 170^0F when introduced into the mix.

   b. When the method of heated aggregates is used, aggregates containing frozen lumps, ice, or snow shall be allowed to enter the mixer. Aggregates may be heated by steam coils or other dry heat but not by discharging live steam or hot water into them. Heating by means of a flame thrower or any direct flame will not be permitted.

   Adequate protection of concrete against damage by frost during the making and early curing period is absolutely essential whenever temperatures below 40^0F are likely to occur within that period.

4. Construction Joints

Construction joints shall be kept to a minimum and will be permitted only where shown on the approved Plans and/or shop drawings.

In order to bond successive courses, suitable keys shall be formed at the top of the lift where construction joints are permitted and at other levels where work is interrupted. These keys shall be as indicated on the Plans. At horizontal construction joints, the pour shall be allowed to set for about 12 hours before placing concrete above same.

After concrete has been placed and before it has hardened, all laitance and foreign material shall be removed from the surface. Before placing fresh concrete adjacent to hardened concrete, the surface of the hardened concrete shall be cleaned thoroughly of any remaining laitance or foreign material, scrubbed with wire brooms and clean water, and thoroughly drenched with water until saturated. It shall be kept saturated until the new concrete is placed.

Unless otherwise specified, the top surface of the concrete shall be leveled whenever a pour of concrete is stopped; and to insure a level, straight joint on exposed face, a strip of sheathing shall be attached to the form at the exposed face where the joint occurs. The concrete shall be carried not more than ½ inch above the underside of this strip. About 1 hour after concrete is placed, the strip shall be removed; and any irregularities in the joint line shall be leveled off with a wood float (use steel trowel at exposed face of joint). All laitance shall be removed. To avoid visible joints at chamfers, the top surface of the concrete shall be steel troweled adjacent to the chamfer using the top surface of the chamfer strip as a guide.

5. Consolidation

All concrete shall be internally vibrated unless herein noted otherwise. Vibration shall be in accordance with the following requirements:

a. All concrete shall be deposited in the forms in its final position and shall be placed in layers of uniform thickness. All concrete shall be consolidated by vibratory methods, unless otherwise specified.

Vibration shall be internal and applied directly to the concrete, except when the use of other methods is authorized by the County or provided herein. The County will be the final judge as to which sections are unsuited for internal vibration.

The Contractor shall provide a sufficient number of vibrators to properly consolidate each batch immediately after it is placed in the forms and before the next batch is delivered, without delaying such delivery. The vibration shall be of sufficient intensity and duration to thoroughly consolidate the concrete, but it shall not be continued to such an extent as to cause

segregation. Vibration shall not be continued at any one point to the extent that any localized areas of grout are formed.

Vibration shall be applied at points uniformly spaced not further apart than twice the radius over which the vibration is visibly effective.

Vibration shall not be used to transport concrete in the forms or to make it flow in the forms over distances so great as to cause segregation. Vibration shall not be applied directly or through the reinforcement or forms to sections or layer of concrete which have hardened to such a degree that the concrete ceases to be plastic under vibration.

Vibration shall be supplemented by such spading, along form surfaces, in corners, and at locations impossible to reach with the vibrators, as is necessary to insure smooth surfaces and dense concrete.

The provisions of this section shall apply to precast concrete cribbing and other precast members or units, except that if approved by the County the manufacturer's methods of vibrating may be used.

b. Internal vibrators shall be of a type and design approved by the County. They shall be capable of transmitting vibration to the concrete at frequencies of not less than 4500 impulses per minute. The intensity of application shall be such as to visibly affect a mass of concrete of 1 inch slumps over a radius of at least 18 inches.

Internal vibration shall be applied directly to the concrete at the point of deposit and in the area of freshly deposited concrete. Vibrators shall be inserted in and withdrawn from the concrete slowly. Internal vibrators shall be manipulated so as to thoroughly work the concrete around the reinforcement and imbedded fixtures and into the corners and angles of the forms.

6. Concrete Surface

a. General

Concrete surfaces shall be finished in accordance with one of the following designations. Unless otherwise specified, all concrete work shall have a "Grout Finish" for vertical surfaces and "Toweled Finish for horizontal surfaces. Strict compliance with the Specifications and the intent pertaining to finished surfaces will be enforced. Any concrete structure or concrete work which exhibits surfaces with defective finish will not be accepted until finishing has been completed in accordance with the Specifications. All concrete surfaces shall be finished within 24 hours after the forms are removed. If the concrete surfaces are not finished as specified within the time limit mentioned, all other work shall be suspended until the concrete

surfaces required to be finished are completed.

Application	Finished Designation
Structures For all concrete surfaces not exposed to public view and not to be waterproofed	Rough Form Finish
For all concrete wall surfaces exposed to public view	Grout Finish
Tops of footings	Float Finish
Horizontal construction joints	Left Rough
Slabs & Miscellaneous Paving	Floated Finish
Incidental Works Sidewalks, curb, combination curb and gutter, concrete paving, safety curb, median paving	Broom or Belt Finish

b. Rough Form Finish

Immediately following the removal of forms, all fins and irregular projections shall be removed from all surfaces except from those which are not exposed or not to be waterproofed. On all surfaces, the cavities produced by form ties and all other holes, honeycomb spots, broken corners or edges, and other defects shall be thoroughly cleaned and, after having been kept saturated with water for a period of not less than 3 hours, shall be carefully pointed and trued with a mortar of cement and fine aggregate mixed in proportions used in the grade of the concrete being finished. Any excess mortar at the surface of the concrete due to filling form tie holes shall be struck off flush with a cloth. The mortar patches shall be cured as specified under Curing. All construction and expansion joints in the completed work shall be left carefully tooled and free of all mortar and concrete. The joint filler shall be left exposed for its length with clean and true edges.

The resulting surfaces shall be true and uniform. All surfaces shall be repaired to the satisfaction of the County.

c. Grout Finish

All fins, projections, etc. shall be removed to the satisfaction of, and by means approved by, the County (stone, chipping hammer, sandblasting, etc.). No cleaning operations shall be undertaken until all contiguous surfaces to be cleaned are completed and accepted. Cleaning as the work

progresses will not be permitted. The surface of the concrete shall then be saturated with water and kept wet for at least 2 hours. Proceeding by sections, a grout mix of 1 part Portland cement and 1-1/2 parts fine sand with sufficient water to produce a grout having the consistency of thick paint shall be thoroughly rubbed onto the surface using burlap pads or cork floats completely filling all voids, pits, and irregularities. While the grout is still plastic, remove all unnecessary grout by working the surface with a rubber float or burlap. After this grout has dried sufficiently so that it will not smear, the surface shall be wiped off with dry, clean burlap so as to leave a clean uniform surface. This surface shall then be cured as required, except that only colorless liquid curing compound will be permitted for this method.

d. Floated Finish

After the concrete has been placed, consolidated, struck off, and leveled, the concrete shall not be worked further until ready for floating. Floating with a hand float or with a bladed power trowel equipped with float shoes, or with a powered disc float shall begin when the water sheen has disappeared and when the surface has stiffened sufficiently to permit the operation. During or after the first floating, planeness of surface shall be checked with a 10 foot straightedge applied at not less than two different angles. All high spots shall be cut down and all low spots filled during this procedure to produce a smooth surface. The slab shall then be refloated immediately to a uniform sandy texture.

e. Broom or Belt Finish

Immediately after the concrete has received a float finish, it shall be given a coarse transverse scored texture by drawing a broom or burlap belt across the surface.

7. Curing

Except for buttresses without steel reinforcement, provisions shall be made for curing all concrete. Curing shall start as soon as concrete has set sufficiently so that curing applications will not damage the surfaces. Curing will also be required while protecting concrete against cold weather.

The following are methods to be used for curing:

a. Two layers of burlaps shall be used. Successive strips of each layer shall be overlapped a minimum of 6 inches. The second layer shall be placed not less than 45 degrees to the first layer; or the 6 inches overlap of the second layer may be placed midway (one-half width) of this first layer. The layers of burlap shall be kept thoroughly saturated with curing water for the full time specified for curing.

b. The material for liquid membrane-forming compounds shall have a fugitive

dye or be white pigmented. The materials shall be thoroughly agitated before use and applied by sprayers.

c. When curing concrete structural slabs, etc., burlap-polyethylene mats or white polyethylene sheets may be used atop the wet burlap on unobstructed flat and reasonably level surfaces.

The burlap-polyethylene mats or white polyethylene sheets shall be placed only on unobstructed flat and reasonably level surfaces. They will not be permitted on vertical surfaces, such as walls, columns, abutments, etc.

Adjacent mats or sheets shall be lapped no less than 1 foot. The ends shall be brought down around the sides of the concrete being cured and securely fastened to the satisfaction of the County to make an airtight seal that will be unaffected by wind.

The burlap-polyethylene mats must be placed on no less than one layer of wet burlap with the burlap side of the mat facing down. White polyethylene sheets, if used, must be placed on no less than two layers of wet burlap.

The burlap-polyethylene mats or white polyethylene sheets must remain in place for the same length of time as required for burlap mats. These protective coverings need not be wetted down; however, the covered burlap or cotton mats must be kept wet for the time interval required by the Specifications.

d. The burlap must be thoroughly saturated just prior to placement. The requirement for keeping the concrete surfaces saturated at all times during the curing period, regardless of the covering, will be strictly enforced. This saturation of the surfaces must be employed even in areas where there is no ready water supply. The Contractor must furnish, at his expense, sufficient water to satisfy this requirement.

All vertical surfaces may be cured by leaving forms in place for 7 days. If forms are removed after 48 hours, then the remainder of the 7 days of cure shall be by method b.

Immediately after the finishing operation for sidewalks and slabs, the areas of future construction joints shall be covered with two layers of wet burlap which shall extend 6 inches outside the joint area. The finished concrete surface shall then be sprayed with a liquid compound as specified in curing method b. The material shall be applied uniformly at the rate of 150 to 200 square feet per gallon, one half applied in a longitudinal direction and the second half in a transverse direction. After 1 day or as soon as the concrete may be walked upon without damage, the concrete shall be cured using method A or C for the remainder of the 7 day curing period.

All other horizontal surfaces shall be cured using either method A or C for a period of 7 days.

8. Prevention and Removal of Stains on Concrete

The Contractor shall prevent rust of unpainted structural steel, staining by bituminous materials, or any other substance from discoloring any portion of the concrete. The Contractor, therefore, shall devise and use construction procedures or methods that prevent staining of any of the concrete. If, however, any portion of the concrete is stained, the Contractor shall remove such stains and restore the concrete to its original color without damage to the concrete all at his expense and as approved by the County. No chemical solvents will be allowed unless previously approved by the County.

9. Defective Work

Concrete work will be considered defective if it is structurally unsound, not watertight, improperly finished and/or does conform to the specified requirements. All concrete work and/or sealing work around built-in items and penetrations shall be performed as required to insure that groundwater, surface water or other substances does not enter into the dry well, equipment rooms, pipe galleries, habitable areas or other usually dry areas. It shall be the Contractor's responsibility to repair, renovate and replace concrete and/or foundation cracks, by crack injection or other means, as determined by field survey.

10. Field Quality Control

A. Inspection

1. For developer projects, the Contractor or Developer shall arrange for the inspection and testing of cast-in-place concrete with reinforcement. For County capital projects, the County will arrange for and pay all costs associated with concrete sampling and testing.

2. When all rebar has been placed to the satisfaction of the inspector, and the Contractor is ready to place concrete, the Contractor shall notify the County inspector. No concrete shall be deposited before the County has reviewed the reinforcing and given permission to proceed. Such inspection and permission to proceed shall in no way release the Contractor of the responsibility for proper placement of reinforcing and placement of concrete, and the responsibility for adherence to the requirements of the Contract Documents.

3. Contractor shall notify the County Inspector of concrete pour at least 1 working day in advance. Notification will not be considered without the County Inspector acknowledging receipt of prior notification.

4. The Contractor shall provide unobstructed access to work areas for the concrete inspector/technician, furnish a wheel barrow for concrete sampling and a suitable storage box for initial curing of cylinders, as specified in ASTM C31. He shall also make running water available at the testing site. The storage box shall be at a location in the vicinity of the cast-in-place concrete structure and shall be within heated and/or protected areas identical to the cast-in-place concrete.

B. Sampling

1. Contractor shall provide and furnish concrete sample for testing.

2. Samples will be taken by the Concrete Inspection Agency in accordance with ASTM C 172 and cylinders molded in accordance with ASTM C 31.

3. A minimum of four test cylinders shall be made for every fifty (50) cubic yards of concrete (or fraction thereof) placed in one day.

4. Test cylinders shall be cured per ASTM C31.

C. Tests

1. Slump tests in accordance with ASTM C 143. Make tests periodically, when cylinders are made and when a change in consistency of concrete is noted. Unless otherwise noted the slump shall be 2 inches minimum and 4 inches maximum. For slabs, the maximum slump shall be 3 ½ inches.

2. Test for air content in accordance with ASTM C231 or C138.

3. Compression and strength tests: Each test will consist of 4 standard 6” x 12” cylinders; 2 cylinders to be tested at the age of 7 days and 2 cylinders at the age of 28 days. Specimens made to check the adequacy of the design for strength of concrete or as a basis for acceptance of concrete will be made and laboratory cured in accordance with ASTM C31. Additional test of specimens cured entirely under field conditions will be utilized to check the adequacy of curing and protection of the concrete as directed. Make strength tests in accordance with ASTM C39.

4. The average of five consecutive strength tests shall be equal to or greater than the specified strength and not more than one test in ten shall have an average value less than 90% of the specified value. When the average of compressive tests for 5 consecutive cylinders falls below the specified strength adjust the design mix and water

content to product the specified strength or concrete that is subsequently place. In addition, the Engineer may order additional curing for that portion of the structure where the questionable concrete has been placed. In the event that such additional curing does not give the strength required as determined by load tests made in accordance with ACI 318 or cored cylinder tests, the Engineer may order defective parts removed and replaced, or reinforced, all at expense of Contractor.

5. The expense of any and all re-inspection and/or retesting required due to failure of concrete to meet requirements shall be borne by the Contractor and/or Developer.

D. Reports

1. Test reports shall include the following:
   a. Exact mix, including quantities of admixtures, etc.
   b. Date of pour.
   c. Exact location of pour in building.
   d. Slump
   e. Truck number.
   f. Type of break.
   g. Air entrainment.
   h. Water content including aggregate moisture.

2. Field inspection reports shall include the following:
   a. Extent of reinforcement and formwork inspected.
   b. Date of inspection.
   c. Any problems encountered or instructions given to the Contractor.

4.0 METHOD OF MEASUREMENT

Except for when used as a buttress, measurement for cast-in-place concrete of the mix number specified will be made on a unit area or volume, or a lump sum per structure basis. In establishing the breakdown between footing concrete and substructure concrete, the division line shall be the top of footing regardless of where the construction joint occurs.

1. Unit Price

Measurement for cast-in-place concrete, when a unit price is provided for in the Proposal, will be made on an area or volume basis for the actual amount of concrete

satisfactorily placed and accepted.

2. Lump Sum

Measurement for cast-in-place concrete, when a lump sum price or prices per structure are provided for on the Proposal Form, will be made on the basis of a lump sum for all concrete included in the Project or on the basis of the number of structures satisfactorily placed and accepted.

3. Concrete for buttresses or any joint restraint will not be measured.

5.0 BASIS OF PAYMENT

A. General

1. Payments will be made at the unit and/or lump sum prices bid. The prices shall include all materials, forms, reinforcing steel, curing materials, sealing, caulking, and dampproof or waterproofing, and all necessary equipment, tools, labor, and work incidental thereto in accordance with the Contract Documents.

2. Payment will be made for contingent items when approved by the County.

B. Unit Price

Payment for cast-in-place concrete will be made at the price bid per cubic yard for the various mix numbers specified.

C. Lump Sum

1. Payment for cast-in-place concrete will be made at the lump sum price bid for all concrete on the Project, or for all concrete in each structure or structural unit as indicated in the Contract Documents.

2. To provide for unforeseen changes in planned dimensions affecting concrete on a lump sum basis, the Contract Documents may include an item(s) for contingent concrete. This item(s) shall be used only upon written direction of the County and applied only to referenced structure(s). If necessary changes in the planned dimensions result in an enlargement, then the pertinent lump sum price shall be increased by an amount obtained from the product of the increase in volume times the unit price bid per cubic yard on the pertinent contingent concrete item. Should, however, the necessary changes result in a smaller structure than planned, then the pertinent lump sum price shall be reduced by an amount obtained from the product of the reduction in volume times the unit price bid per cubic yard on the pertinent contingent concrete item. The unit price bid on the pertinent contingent concrete item shall include cost of all concrete, reinforcing steel, expansion material, dampproofing, membrane waterproofing, form work, incidental materials, etc. and work required to complete the structure(s) as revised.

D. Concrete will not be paid for when used for joint restraint unless approved.

This page has been intentionally left blank.

SECTION 03400
PRECAST CONCRETE UTILITY STRUCTURES

1.0 GENERAL

A. Description

Precast concrete utility structures shall include, but not necessarily be limited to, furnishing and installing precast concrete structures, manholes, valve and meter vaults, grade rings, and other miscellaneous structures of the configuration and to the extent indicated and in accordance with the Contract Documents.

B. Related Work Included Elsewhere

1. Trench Excavation, Backfill, and Compaction: Section 02250

2. Water Valves and Appurtenances: Section 02662

3. Water Services and Appurtenances: Section 02664

4. Sanitary Sewer Manholes: Section 02710

C. Quality Assurance

1. All manufacturers of pre-cast concrete utility structures shall possess a current certification from the National Pre-cast Concrete Associate (NPCA). The manufacturer shall submit the current certification to the County upon request.

2. The County will inspect all materials prior to installation. Any pre-cast concrete sections which are not in compliance with the required dimensions; which are not true, square, plumb, symmetrical; which have honey-combing; cracks, chips; which do not have smooth surfaces; or otherwise have visible material defects shall be rejected and removed from the project site. Rejected materials may not be repaired but shall be replaced with new products. Cosmetic defects, if in the opinion of the Division of Water and Sewer, Deputy Director, will not affect the integrity, longevity and water tightness of the structure, may be allowed in writing.

2.0 MATERIALS

A. Materials Furnished by the County

The County will not furnish any materials for precast concrete utility structures.

B. Contractor's Options

None.

C. Detailed Material Requirements

1. General

a. Design Criteria

(1) Structural design for precast units shall be prepared by a Maryland registered Engineer for the precast concrete manufacturer. Units shall be designed for HS 20 load designation or 300 pounds per square foot live load, whichever is most critical for determining the concrete and steel stresses.

(2) Where more than one standard is referenced for any given unit, should there be a conflict, the more stringent requirement as determined by the County, shall apply.

(3) Unit configuration shall be as shown on the Plans and/or Standard Details.

(4) Distribution of earth loading and live load shall be in accordance with ASTM C 857 or ASTM C 890.

(5) Walls shall be designed using an equivalent fluid pressure of 83 pounds per cubic foot and a 2 foot surcharge. The units shall also be designed to resist all stress encountered during casting, handling, and erection.

b. Pre-cast Concrete Manholes and Vaults

(1) The precast units shall be factory cast. Job site casting will not be permitted. Concrete in the precast elements shall be continuously placed to prevent formation of seams. The finished units shall be free of voids and cracks. Exposed corners and edges shall be beveled. All inserts shall be securely attached or embedded in their proper location.

(2) Concrete strength of all precast units at 28 days shall be 4000 psi minimum, unless otherwise specified. It shall be the precast unit manufacturer's responsibility to insure that the specified concrete strength is maintained throughout production of the units. Mix design shall be those previously used by the manufacturer which have proven satisfactory for casting units similar to those specified and producing the required strength. All precast concrete shall be air entrained in accordance with AASHTO M154. Admixtures containing calcium chloride shall not be used.

(3) Vault wall sleeves or gaskets for piping, sumps, steps, access hatches, and other inserts as shown on the Plans and/or Standard Details shall be cast into the structure or inserted at the place of manufacture.

c. Product Handling

(1) No precast unit shall be shipped in less than 7 days from date of manufacturer, unless the unit has been tested and is shown to be in full compliance with the Specifications. Date of manufacture shall be stamped on each unit.

(2) Precast sections shall be transported and handled with proper equipment to protect the elements from damage. Sections shall be handled by means of lifting inserts embedded in the concrete. Damaged sections shall be replaced with new unused materials.

2. Pre-cast Concrete Manholes

a. Pre-cast concrete manhole bases, risers, cone sections, and grade rings shall meet the material and manufacturing requirements of ASTM C478, except the minimum 28-day compressive strength of the concrete shall be 4000 psi. Joints shall meet the requirements of ASTM C443, shall be self – centering, and shall form a tight joint free from water leakage and seepage.

b. Precast concrete manholes and grade rings shall meet the requirements of ASTM C 478 except that the minimum compressive strength of the concrete shall be 4000 psi. The maximum individual grade ring height shall be 3 inches. Grade rings shall include steel reinforcement.

c. Each manhole section shall be clearly marked inside with the following:
- ASTM Designation
- Date of Manufacturer
- Name or Trademark of Manufacturer
- Manhole No. which corresponds to the Contract Drawings

d. All other manhole material components shall be in accordance with Section 02710 and the Standard Details.

3. Pre-cast Concrete Vaults

a. Pre-cast concrete utility vault bases, risers and top slabs shall meet the material and manufacturing requirements of ASTM C857 and C858, except the minimum 28-day compressive strength of the concrete shall be 4,000 psi. Joints shall meet the requirements of ASTM C443, shall be self-centering, and shall form a tight joint free from water leakage and seepage.

b. Each section of the vault shall be clearly marked on the inside with the following:
- ASTM Designation
- Vault Size
- Date of Manufacturer
- Name or Trademark of Manufacturer

4. Joints

a. Joints shall be sealed with manufacturer-supplied gaskets or mastic sealing compound which meets the recommendation of the manufacturer. Joints shall provide a water-proof joint free from water leakage or seepage.

5. Steps

Steps shall be as specified in the Standard Details.

6. Granular Bedding

Granular bedding shall meet the requirements of AASHTO M 43, No. 57.

7. Pipe Penetrations

Pipe penetrations for pipe openings shall be cast into the pre-cast sections.

a. A banded-boot type rubber gasket shall be provided for a vertical pipeline alignments greater than 18% and less than 46.5% slopes.

b. A compression type rubber gasket shall be provided for a vertical pipeline alignment less than 18% slope.

c. A mechanically compressed rubberized gasket shall be used for cored openings.

3.0 EXECUTION

A. Installation

1. Precast sections shall be transported and handled with proper equipment to protect the units from damage. Sections shall be handled by means of lifting inserts embedded in the concrete. All pre-cast concrete unit construction shall consist of new and un-used products, free from defects. Repairs to pre-cast concrete units shall be strictly prohibited, before, and after shipment. Pre-cast concrete units damaged as a result of installation shall be removed and disposed of by the Contractor at no cost to the County and not returned to the project site. Damaged pre-cast units shall be replaced with new un-used pre-cast units from the same manufacturer. Injection of grout sealant in the surrounding soils to correct joint leakage is prohibited.

2. Excavation, foundation preparation, backfill, and compaction shall be as specified in Section 02250.

3. Precast units shall be installed where and as shown on the Contract Documents and Standard Details or as directed by the County.

4. Mating surfaces shall be cleaned of all foreign materials such as dirt, mud, stones, etc., and where appropriate, joint sealing materials applied prior to assembly of the units. If mastic is used as a joint sealant, it shall be re-applied with new material every time the pre-cast units are re-set, or re-positioned.

5. Grade rings shall be set on a full bed of mortar.

4.0 METHOD OF MEASUREMENT

Measurement for precast concrete utility structures will be made as specified in the "Contract Documents."

5.0 BASIS OF PAYMENT

A. General

1. Payment for precast concrete utility structures, complete and in place will be lump sum or as dictated by the appropriate section. The prices shall include all materials, sealing caulking, waterproofing, and all necessary equipment, tools, labor, and work incidental thereto in accordance with the Contract Documents.

2. Payment will be made for contingent items when approved by the County.

B. Lump Sum

1. Payment for precast concrete units will be made at the lump sum price bid for each structural unit as indicated in the Contract Documents.

This page has been intentionally left blank.

SECTION 03500
CONCRETE REPAIRS

1.0 GENERAL

A. Description

The Contractor shall furnish all materials, labor, equipment, tools, etc., required for the repair, renovation, and replacement of concrete and/or foundation cracks, by crack injection or other means, as determined by field survey.

The Contractor, in conjunction with the Engineer and Owner, shall determine the extent of cracked or deteriorated concrete to be repaired and/or replaced. A summary of the work to be performed shall be submitted to the Engineer for review, and such summary shall be approved by the Engineer prior to commencement of the Work.

B. Water Tightness of Structures

1. All concrete work, sealing work around built-in items and penetrations shall be performed as required to insure that groundwater and/or surface water infiltration does not intrude into any dry well, equipment rooms, pipe galleries, habitable areas or other generally dry areas.
2. The required water tightness shall be achieved by quality concrete construction, formwork and proper sealing of all joints and penetrations.
3. Penetrations: all pipe sleeves, built-in items and penetrations shall be sealed as required to ensure a continuous watertight seal.
4. Structures: all concrete structures and foundations shall be examined for leakage to insure there is no flowing or running infiltration of water or other substances.

C. Subcontractor/Applicator Qualifications

1. The Contractor shall furnish the names of all subcontractors/applicators which he proposes to use for this work, including necessary evidence and/or experience records to ascertain their qualifications in the application of epoxy, urethane, polymer-modified, silica fume enhanced mortars and grouts, or other means.
2. A minimum of five (5) year experience in applying epoxy, urethane, polymer-modified and cement-based compounds.
3. A letter from the manufacturer of the specified materials, on the manufacturer's letterhead, signed by an officer of the company, stating that the subcontractor/applicator has been trained in the proper techniques for applying the product, including surface preparation and mixing, placing, curing, and caring for the manufacturer's products. This letter shall further state that the subcontractor/applicator is on the manufacturer's approved list of contractors.

D. Quality Assurance

1. The County shall inspect the structure for leakage. If moist spots become visible, indicating the existence of minor leaks, or if there is running/flowing water, then it shall be the Contractor's responsibility to furnish all materials and complete all work necessary to locate the leaks, and make the structure watertight to the complete satisfaction of the County. This includes the repair of cracks in wall, foundation, penetrations, etc. No additional compensation shall be allowed for such work.
2. Any defective or imperfect work or materials furnished by Contractor, which is discovered before the final acceptance of the work, as established by the Certificate of Substantial Completion, or during the subsequent guarantee period, shall correct by the Contractor.
3. The Contractor shall guarantee all repair work performed under this Contract against defects in workmanship resulting in leakage and/or failure of concrete bond for a period of two (2) years from the date of the Certificate of Substantial Completion.

E. Submittals

1. Material certifications and technical data sheets on all grouts, mortars, epoxy resins, aggregates and repair products.
2. Shop Drawings detailing specific details of proposed repairs including any planned deviation from the proposed construction sequence and/or method of repair.
3. The Contractor, based on their experience in their profession, may submit to the Engineer for approval, alternative materials and/or methods of work to assure the durability and watertight integrity of the repair work performed.

F. Additional Guarantee

The Contractor shall guarantee all repair work performed under this Contract against defects in workmanship resulting in leakage and/or failure of concrete bond for a period of two (2) years from the date of the Certificate of Substantial Completion.

2.0 MATERIALS

A. Performance & Design Requirements: Unless otherwise specified or authorized, repairs shall conform to the requirements specified herein. Types of repairs not specified herein or in the absences of any definite requirement, as recommended by the Manufacturer's representative and subject to the acceptance by the Engineer. The following types of repairs shall be performed as required.

1. Pressure-Inject Epoxy Resin: pressure-injected epoxy resin shall be used to seal cracks, construction joints and other repairs in concrete structures as required or as directed.
2. Pressure-Injected Foam Resin: pressure-injected foam resin shall be used to seal joints and cracks in concrete structures that will have movement as

required or as directed.

3. Crack Sealant: crack sealant shall be used to seal cracks in structures prior to pressure injection of resin.

4. Waterproof Injection Grout: waterproof crack repair material shall be a one-component, water-activated polyurethane hydrophilic injection grout capable of 700% expansion.

B. Materials: all materials shall be as specified or as recommended by the manufacturer for temperature and moisture conditions encountered.

Pressure-Injected Epoxy Resin	ASTM C881, Type 1 or Type IV, moisture tolerant or moisture insensitive
Pressure-Injected Foam Resin	Hydrophilic polyurethane foam; Prime Resins “Prime-Flex 900 XLV”, DeNeef “Hydro-Active Sealfoam” and/or “Hydro-Active Flex LV”, Avanti “AV-333 Injectaflex” or approved equal.
Foam Resin Accelerator	As recommended by foam resin manufacturer
Crack Sealant	As recommended by the manufacturer of the pressure-injected resin product.
Water	Clean and free from delirious substances

3.0 EXECUTION

A. Inspection

Prior to the placement of the repair materials, the crack to be repaired shall be inspected by the material manufacturer to assure that preparation and conditions are correct for the type of repair and the product/material being used.

B. General Requirements

No repair work shall be undertaken when ambient temperatures are below manufacturer's safe recommendations. No admixtures, except those required by the manufacturer, shall be used in the repairs specified herein. All products shall be applied in strict accordance with manufacturer's recommendations. The Contractor shall furnish and install safe scaffolding and ladders for the Engineer's prework inspection, the repair work activities, and the Engineer's final inspection.

C. Pressure-Injected Preparation

1. Preparation for injected epoxy and/or foam resin shall include drilling offset injection holes at an angle that will intersect the crack, joint or crack network at approximately one-half the thickness of the concrete up to a thickness of 36 inches and as recommended by the manufacturer. Holes drilled for injection ports shall not cut rebar. If rebar is encountered during drilling, the hole shall be abandoned and relocated, and the abandoned hole shall be

patched immediately with non-shrink grout flush with the surface of the existing concrete. Spacing of injection ports shall be determined as recommended by the injection material manufacturer and as acceptable to the Engineer.

2. Once the surface sealing material has cured, inject crack with waterproof injection grout using standard pressure injection equipment as directed by the manufacturer.

D. Curing

All repair products shall be cured in strict accordance with manufacturer recommendations.

4.0 CLEANING

The work areas shall be cleaned each day in accordance with the project requirements. Upon completion of the final cleanup, the Contractor shall restore all areas affected by the repairs procedures to their original conditions, leaving no trace of materials or other waste materials.

SECTION 04100
MORTAR

I.0 GENERAL

A. Description

Mortar shall include, but not necessarily be limited to, furnishing site mixed mortar for masonry, pipe connections, grouting, and other uses as specified in the Contract Documents or as directed by the County.

B. Related Work Included Elsewhere

1. Removal or Abandonment of Existing Utilities: Section 02050

2. Water Valves and Appurtenances: Section 02662

3. Water Services and Appurtenances: Section 02664

4. Sanitary Sewer Manholes: Section 02710

5. Brick Masonry: Section 04200

C. Quality Assurance

The County will inspect all materials before, during and after installation to ensure compliance with the Contract Documents.

2.0 MATERIALS

A. Materials Furnished by the County

1. The County will not furnish any materials for mortar.

2. The Contractor may purchase water from the County's potable water system in accordance with the current County policies and procedures.

B. Contractor's Options

Not applicable.

C. Detailed Material Requirements

1. Water shall be potable.

2. Portland Cement

Portland cement shall meet the requirements of ASTM C150.

3. Mortar

   a. Sewer and Water Main Construction

      Proportions of mortar shall be 1 part Type II Portland Cement (ASTM C150) and 3 parts masonry sand meeting ASTM C144.

   b. Mortar for Parging Masonry Walls below Grade

      Proportions of mortar shall be 1 part Type I Portland Cement (ASTM C150), ¼ part hydrated lime (ASTM C207, Type d), and 3 parts sand.

   c. Mortar for laying Concrete Block Walls, Brick Walls and Unit Masonry Structures

      i. Below grade mortar shall be ASTM C270 (Masonry Cement) or ASTM C91 (Portland/Lime Blend), Type M.

      ii. Above grade, mortar shall be ASTM C270 (Masonry Cement) or ASTM C91 (Portland/Lime Blend), Type S (air-entrained).

4. Hydrated Lime for Masonry

   Hydrated lime for masonry shall meet the chemical requirements of ASTM C 207, Type N.

5. Grout

   Grout used for anchor bolts, pipe handrail posts and miscellaneous items shall be composed in accordance with one of the following:

   a. one part Portland cement and one part mortar sand by dry loose volume;

   b. an epoxy or polyester anchoring system may be used as approved by the County and in accordance with the manufacturer's recommendations. Strength values shall be as indicated on the Contract Documents.

   c. non-shrink grout shall be used when specified. The grout shall have a minimum compressive strength of 5,000 psi in seven (7) days when tested with AASHTO T-106 except that the cube molds shall remain intact with a top firmly attached throughout the curing period. The nonshrink grout shall have a minimum expansion of 0.0 percent after seven (7) days when tested in accordance with AASHTO T-160.

6. Rapid-set grout mix for brick manhole conversion – only

   a. Rapid-set mortar for use with the conversion of brick manhole sections to pre-cast concrete sections shall be a quick setting, high strength, self bonding and curing concrete patching and finishing compound. The mortar shall come from the manufacturer in bags, uniformly pre-mixed, consisting of Portland cements and graded washed silica aggregates with polymer modification to promote a lasting surface adhesion. The product shall meet the minimum properties: Compressive strength in accordance with ASTM C-109, air cure, 1 hour at 225 psi, 24 hours at 3340 psi, 7 days at 5050 psi and 28 days at 5800 psi; flexural strength in accordance with ASTM C-348, 28 days at 900 psi; Shear bond to concrete 28 days at 250 psi; Freeze Thaw Stability in accordance with ASTM C-290, compressive 300 cycles at 6,000 psi; Chemical resistance shall be “good” against de-icing salts and mild acids.

3.0 EXECUTION

A. Mixing

1. Mortar may be mixed in an approved mixing machine or manually in a tight box. The dry materials shall be mixed until the mixture assumes a uniform color and consistency. Water shall be added as the mixing continues until the proper consistency has been attained for the intended use.

2. Mortar shall be mixed only in quantities that satisfy immediate use. Retempering of mortar shall not be permitted.

B. Curing

1. Mortar within brickwork for manhole channels and benches shall cure a minimum of 24 hours before being exposed to sewage.

4.0 METHOD OF PAYMENT

Mortar will not be measured.

5.0 BASIS OF PAYMENT

Mortar will not be paid for as a separate item but is considered incidental to other items of work. Payment will be included in other related items of work and will constitute full compensation for all labor, equipment, tools, and incidentals necessary to complete the required work.

This page has been intentionally left blank.

SECTION 04200
BRICK MASONRY

1.0 GENERAL

A. Description

Brick masonry shall include, but not necessarily be limited to, furnishing and installing brick masonry above and below grade to the sizes and shapes and at the locations indicated in accordance with the Contract Documents or as directed by the County.

B. Related Work Included Elsewhere

1. Removal or Abandonment of Existing Utilities: Section 02050

2. Boring and/or Jacking Pipe: Section 02300

3. Tunneling: Section 02400

4. Water Valves and Appurtenances: Section 02662

5. Water Services and Appurtenances: Section 02664

6. Fire Hydrants: Section 02666

7. Sanitary Sewer Manholes: Section 02710

C. Quality Assurance

The County will inspect all materials before, during and after installation to ensure compliance with the Contract Documents.

2.0 MATERIALS

A. Materials Furnished by the County

The County will not furnish any materials for brick masonry.

B. Contractor's Options

None.

C. Detailed Material Requirements

1. Sewer brick shall be grade SM, have dimensions not exceeding 2 1/4" x 3 3/4" x 8", and meet the requirements of ASTM Designation C32. The bricks shall have a fine-grained uniform, and dense structure, free from lumps of lime, laminations, cracks, checks, soluble salts or other defects which may in any way impair their strength, durability, appearance, or usefulness for the purpose intended. Bricks shall emit a clear, metallic ring when struck with a hammer.

2. Mortar shall be as specified in Section 04100.

3.0 EXECUTION

A. Environmental Requirements

1. General

a. Cover completed work each day to prevent rain or melting snow from penetrating the mortar of upper courses. Do not uncover until immediately before new work is to be laid. Protect new masonry for a period of not less than 72 hours immediately following laying. This time period may be extended by the County.

b. Spray masonry laid during the period from April to November, inclusive, with sufficient water so as to be moist, but not saturated with water just prior to use.

2. Cold Weather Protection

a. No brick masonry work or pointing shall be done when there is frost in the brick or when the air temperature is below 40°F, unless the Contractor has on the project ready to use, if and when directed, suitable housing, covering, tarpaulins, etc. and artificial heating devices necessary to keep the atmosphere surrounding the masonry at a temperature of not less than 40°F.

b. Protect work by heating and maintaining the temperature of the masonry materials at not less than 40°F but not more than 160°F and maintaining an air temperature above 40°F on both sides of the masonry for not less than 72 hours. Work will not be permitted with or on frozen materials. When the temperature reaches or is above 40°F proceed as under warm weather conditions.

3. Hot Weather Protection

a. During hot weather, protect masonry from direct rays of sun. Cover, and/or wet all finished work for a period of 7 days after laying.

b. Do not erect masonry when the ambient air is warmer than 99°F in the shade and has a relative humidity of less than 40% unless the work is prevented from drying out for not less than 48 hours after having been installed.

B. General

1. Keep joints equal to the difference between the actual and nominal dimensions of the unit being installed.

2. Toothing of new work into existing work will not be permitted.

C. Preparation

1. Clean dirt, debris, oil, grease, and other foreign substances which would affect bond of mortar, from all surfaces to receive mortar.

2. Lay out brickwork to establish accurate spacing of bond pattern, to ensure uniform joint widths, and to locate openings, returns, and offsets. Arrange units in a manner which will result in few or no units to be cut.

3. Wetting Bricks

a. Brick having absorption rates in excess of 0.025 ounces per square inch per minute, when tested in accordance with ASTM C 67 shall be wetted, so that the rate of absorption does not exceed that rate.

b. Wetting methods shall ensure that each brick, immediately before being installed, is nearly saturated but brick surfaces are dry.

D. Erection

1. Workmanship

a. All brickwork shall be laid by competent mechanics and any workman not deemed to be such by the County shall be removed from the work at once.

b. Lay masonry plumb, true to line, with level and accurately spaced courses. Where bricks are laid on their side for the manhole channel, the joint spacing shall not exceed 3/16-inch. On manhole benches where brick is laid flat, the joint spacing shall be no more than ½-inch.

c. Build in wood blocking, strips, grounds, wedges, pipe sleeves, frames, and similar items of material necessary to properly secure the work for other trades.

d. Remove mortar which has splashed or been smeared on finished surfaces with stiff bristle brushes as the work progresses.

e. Special care shall be taken in laying brick in inverts of manholes, transition sections, junction chambers, brick wyes and similar structures to insure a uniform flow of water through the sections. In such locations joints shall not exceed three-sixteenths (3/16) inch thickness and each brick shall be laid in full mortar joints on bottom side and end performed in one operation; no grouting or working in of mortar after laying the brick will be permitted.

f. All brick work for manhole adjustments shall be installed flat in a radial pattern and not placed on edge in any course. The face of brick manhole interiors shall not be parged.

2. Parging

a. Parge exterior masonry in contact with the earth with two coats of Portland cement mortar, each 3/8 inch thick. The first coat shall be cross-scratched; the second coat shall be troweled smooth, beveled at the top, and coved out at the edge of the footing. Extend parging not more than 4 inches above grade, unless otherwise, and keep damp for at least 3 days.

b. Parging the interior surfaces of a manhole is not permitted without prior County approval.

3. Brick

a. Lay brick work in common bond. Fill all joints between bricks completely with mortar. Form bed joints with a thick layer of mortar, which shall be smoothed. The practice of buttering at the corners of brick and then throwing mortar or scrappings into the empty joints will not be permitted. Lay closure brick with a bed joint and with head joints. Place the brick carefully without disturbing the joints. Place the brick carefully without disturbing the brick previously laid. Properly bond each course. Dry or butt joints will not be permitted. Provide grouting where indicated.

b. Use sewer brick whenever brick construction is exposed to sewage flow. Lay sewer brick on edge so that the 2 1/4 by 8 inch side is exposed to the flow.

c. Channel configurations shall be constructed as per the Standard Details.

d. All manhole frame and cover adjustment brick work will be installed in a flat radial pattern.

4.0 METHOD OF MEASUREMENT

Unit masonry will not be measured.

5.0 BASIS OF PAYMENT

Unit masonry will not be paid for as a separate item but is considered incidental to other items of work. Payment will be included in other related items of work and will constitute full compensation for all labor, equipment, tools, and incidentals necessary to complete the required work.

This page has been intentionally left blank.

SECTION 05500
MISCELLANEOUS METALS

1.0 GENERAL

A. Description

Miscellaneous metals shall include, but not necessarily be limited to, furnishing and installing anchors, fasteners, hardware, castings, utility specialities, and other miscellaneous metal items in accordance with the Contract Documents or as directed by the County.

B. Related Work Included Elsewhere

1. Boring and/or Jacking Pipe: Section 02300

2. Tunneling: Section 02400

3. Water Mains: Section 02660

4. Water Valves and Appurtenances: Section 02662

5. Water Services, Water Meter Settings, and Vaults: Section 02664

6. Fire Hydrants: Section 02666

7. Sanitary Sewer Manholes: Section 02710

C. Quality Assurance

1. The County will inspect all materials before, during, and after installation to ensure compliance with the Contract Documents.

2. All miscellaneous metal items and fabrications shall be anchored firm and tight, in true alignment with neat fits, and without distortions, unsightly fastenings, raw edges, or protrusions.

2.0 MATERIALS

A. General

1. Materials shall be furnished in accordance with the Contract Documents and the current edition of the Approved List of Suppliers and Materials for Water and Sewer Main Construction.

B. Materials Furnished by the County

The County will not furnish any miscellaneous metals.

C. Contractor's Options

Not applicable.

D. Detailed Material Requirements

1. Whenever practicable, items shall be standard products, meeting the requirements specified herein, of a manufacturer regularly engaged in production of such items.

2. All fasteners, hangers, or other miscellaneous connections or accessories shall be of the same material or compatible with the item being fastened or hung.

3. Shapes and Bars

   a. Mild steel shall conform to requirements of ASTM A 36.

   b. Stainless steel shall conform to requirements of ASTM A 276, Type 304.

   c. Aluminum shall conform to requirements of ASTM B 221, Alloy 6061-T6.

4. Plate, Sheet, Strip

   a. Mild steel shall conform to requirements of ASTM A 36, or A 283, Grade C.

   b. High strength steel shall conform to requirements of ASTM A 242.

   c. Corrosion resistant steel shall conform to requirements ASTM A 242; 0.25 to 0.75 percent copper.

   d. Stainless steel shall conform to requirements of ASTM A 240, Type 304.

   e. Aluminum shall conform to requirements of ASTM B 209, Alloy 6061-T6.

5. Mild steel forgings shall conform to requirements of ASTM A 668, Class F.

6. Castings

   a. Unless noted otherwise, gray iron shall conform to requirements of ASTM A48, and AASHTO Designation M306, Class 30 B.

   b. Malleable iron shall conform to requirements of ASTM A 47, Grade 35018.

   c. Ductile iron shall conform to requirements of ASTM A 536, Grade 60-40-18.

   d. Nodular iron shall conform to requirements of ASTM A 220, Grade 45008.

e. Steel shall conform to requirements of ASTM A 27, Grade 65-35. The supplementary requirements of ASTM A 27 for tolerances and deviations shall also apply.

f. Chromium alloy-steel castings shall conform to the requirements of ASTM A 743, A 744, and A 297. The grade shall be as specified in the "Special Provisions" for the particular use requirement of the casting.

g. Aluminum shall conform to requirements of ASTM B 108, Alloy ANSI 356.0, T6.

7. Bolts, nuts, washers

a. General

1) Provide galvanized for use with galvanized material.

2) Provide stainless for use with corrosion resistant metals.

b. Stainless

1) Bolts shall conform to requirements of ASTM A 320, Type 316.

2) Nuts shall conform to requirements of ASTM A 194, Grade 8.

3) Washers shall be Type 316.

c. Expansion bolts shall be the metal shield type.

d. Steel drive bolts shall be the split shank type.

e. Headed steel anchors shall be fabricated from cold finished carbon steel conforming to requirements of ASTM A 108.

f. Cast washers, ogee washers and special cast washers shall meet the requirements of ASTM A 47. Cast washers shall be mechanically or hot-dip galvanized. The coating shall meet the thickness, adherence, and quality requirement of ASTM A 153.

g. Bronze bolts, nuts, and washer shall meet the requirements of ASTM B 21, UNS No. C46400.

8. Hardware

Spikes, wood screws, staples, brads, lag screws, carriage bolts, and other parts coming under the general heading of "Hardware" shall be composed of carbon steel and shall meet the requirements of FSS FF-N-105.

9. Checkered safety plate

    a. Aluminum shall conform to requirements of ASTM B 221, Alloy 6063, T6.

3.0 EXECUTION

A. Fabrication

1. General

    a. Fabricate all work true to shape, size and tolerances as indicated in the Contract Documents and on approved Shop Drawings; with straight lines, square corners, or smooth bends; free from twists, kinks, warps, dents, and other imperfections.

    b. Thickness of the metal and details of assembly and support shall provide sufficient strength and stiffness to resist distortion during shipment, handling, installation, and under severe service conditions. Dress exposed edges and ends of metal smooth, with no sharp edges and with corners slightly rounded. Construct connections and joints exposed to weather to exclude water.

    c. Provide sufficient quantity and size of anchors for the proper fastening of the work.

2. Fabricated Products

    a. Pipe wall sleeves in concrete construction shall be standard weight, black steel pipe, with anchors welded to exterior, size as required to accommodate passage of conduits, pipes, ducts, and similar items with proper clearance.

    b. Hatch Doors

    Provide hatch doors that meet the requirements noted in the standard details and/or contract documents.

    c. Connections

        1) Shop connections in weldable materials, not designed for service removal, shall be welded. All welding shall conform to AWS D1.1 requirements. Grind all exposed welds smooth. Remove weld, brazing, and solder spater, flux, slag, and oxides from finished surfaces. Use sheet metal lock seams only when indicated on the Plans or approved shop drawings.

        2) Complete all provisions for bolted field connections in the shop unless otherwise indicated.

3) Match exposed work to produce continuity of line and design. Fabricate and fasten metal work so that the work will not be distorted, the finish impaired, nor the fasteners overstressed from the expansion and contraction of the metal. Conceal fastenings whenever practicable.

d. Castings and Forgings

1) Fabricate castings and forgings to the sizes and shapes indicated. Castings and forgings shall be uniform quality, true to pattern; strong, tough, of even grain; sound; smooth; without cold sheets, scabs, blisters and sand holes, cracks or other defects. Plugs, filled holes, and welding will not be allowed. Castings shall be of thickness and configurations shown on the Standard Details. Abrasive blast as required to remove scale and to achieve a uniform smooth clean surface. Paint with asphaltum or coal tar paint meeting requirements of AWWA C 203, where indicated. Provide raised letters where indicated.

2) Valve boxes shall be Class 30B, round head, screw type consisting of snug fitting top, bottom sections, and screw type extension. Lid shall be removable only by lifting straight up from the shaft shoulder.

3) Meter setting fittings, yokes, and appurtenances for 3/4 through 2-inch metered water supplies, and meter pit frames, lids, and covers shall be as specified on the Standard Details.

4) Manhole frames and covers shall be cast from material meeting the requirements of ASTM A48, Class 30B. Weights, configuration, and lettering shall be as shown on the Standard Details.

e. Miscellaneous anchors, strap anchors, clip angles, and plates, hangers, etc., and other items, together with all miscellaneous structural shapes required for construction of the work shown on the Plans, shall be furnished in accordance with the requirements of the Contract Documents.

B. Painting and Coatings

1. Where indicated, shop and/or field paint miscellaneous metal items according to the paint systems specified in the Contract Documents.

2. Galvanized touch up shall be zinc dust coating conforming to requirements of Military Specification P-26915.

3. Bituminous corrosion protection shall conform to requirements of Military Specification C-18480.

4. Coat aluminum accessories and items embedded in concrete with an inert compound capable of effecting isolation of the deleterious effect of the aluminum on the concrete.

C. Delivery, Handling, and Storage

1. Identify, and match mark if applicable, all materials, items, and fabrications; for installation and field assembly.

2. Wherever practicable, deliver items to job site as complete units, ready for installation or erection, with all anchors, hangers, fasteners, and miscellaneous metal items required for installation.

3. Provide adequate storage facilities at the job site for the protection and storage of all delivered materials. Handle and store in such a manner as to not damage factory finishes. The Contractor shall repair damaged finishes at no cost to the County.

D. Erection and Installation

1. Erection and installation of miscellaneous metal items shall be in accordance with requirements specified elsewhere in the Contract Documents.

2. Miscellaneous metal items and fabrication shall be installed in their proper locations as shown or directed and shall be anchored, rigid and secure, plumb and level unless otherwise shown, and in true alignment with related and adjoining work.

3. The Contractor shall provide shims, washers, anchors, and such additional work as necessary to achieve a satisfactory installation.

4.0 METHOD OF MEASUREMENT

Miscellaneous metals will not be measured.

5.0 BASIS OF PAYMENT

Miscellaneous metals will not be paid for as separate items. The materials and their installation are considered incidental to the work required in the construction of specific structures that will be paid for under various items indicated in the Contract Documents. Payment will constitute full compensation for all labor, equipment, tools, and incidentals necessary to complete the required work.

SECTION 11307
SEWAGE GRINDER PUMPING UNITS

1.0 GENERAL

A. Description

Sewage Grinder Pumping unit installation shall include but not necessarily be limited to furnishing and installing the sewage grinder pumping (SGP) units including accessway, tank, pumps and motors, check valves, and control and alarm panels of the size and type shown on the plans and in accordance with the Contract Documents.

B. Submittals

Shop drawings shall be furnished for review and approval to the Engineer with subsequent review and approval by the Harford County Division of Water and Sewer for the following items:

1. Sewage grinder pump units including accessway, tank, pumps and motors, check valves, controls and wiring.

2. An affidavit from the pump supplier that the required quantity of grinder pump cores, electrical cable, supply/control and control panels are stored and will be made available at the local pump suppliers warehouse until such time as the lots are developed and connected to public sewer.

C. Related Work Specified Elsewhere

1. Trench Excavation, Backfill and Compaction: Section 02250

2. Gravity Sanitary Sewer and House Connections: Section 02700

3. Low Pressure Sewer: Section 02731

4. Sanitary Sewer Force Mains: Section 02720

5. Cast-in-Place Concrete: Section 03300

D. Quality Assurance

1. The County will inspect all materials before, during and after installation to ensure compliance with the Contract Documents.

2. The grinder pump shall be free from electrical and fire hazards as required in a residential environment. As evidence of compliance with this requirement, the completely assembled and wired Grinder Pump Station shall be listed by Underwriters Laboratories, Inc., to be safe and appropriate for the intended use.

3. The grinder pump shall meet accepted standards for plumbing equipment for use in or near residences, shall be free from noise, odor, or health hazards, and shall have been tested by an independent laboratory to certify its capability to perform as specified in either individual or low pressure sewer system applications. As evidence of compliance with this requirement, the grinder pump shall bear the seal of NSF International.

2.0 MATERIALS

A. General

1. Materials shall be furnished in accordance with the Contract Documents and the current edition of the Approved List of Suppliers and Materials for Water and Sewer main construction.

B. Sewage Grinder Pump Units

1. The Contractor shall furnish new, factory-built sewage grinder pump units consisting of simplex or duplex grinder pump core units and all necessary parts and equipment installed in high density polyethylene tanks.

2. Sewage grinder pump units shall be as manufactured by the Environment/One Corp., 2772 Balltown Road, Niskayuna, New York 12309 or approved equal. The equipment specified shall be a product of a company experienced in the design and manufacture of sewage grinder pumps (progressive-cavity type) for specific use in low pressure sewer applications. The company shall submit detailed product specifications, submit evidence of an established service program (over 15 years of experience), and shall be responsible for maintaining a continuing inventory of grinder pump replacement parts.

3. Operating Conditions: The pumps shall be of a semi-positive displacement type. Each pump shall be capable of delivering 11 GPM against a normal rated total dynamic head of 92 feet. At zero head, the output shall be 15 GPM, minimum. The pumps shall be capable of intermittent (3 minutes minimum) operation at any head up to 185 feet total dynamic head with a minimum flow of 7.8 GPM. The electrical rating of each pump motor shall be 8 amperes, 1 phase, 240 volts, 60 Hertz.

4. Tanks

   a. Sewage grinder pump basins (tanks) and integral accessway shall be manufactured by the Environment/One Corp., 2773 Balltown Road, Niskayuna, New York, 12309 or approved equal. The tank shall be of high density polyethylene (HDPE) corrugated double wall construction, minimum ¼-inch thick. The internal wall shall be generally smooth with the outside wall having a minimum of 1 ½ inch corrugations for stiffness. Tank bottom and all other construction seams shall be thermally welded and factory tested for lead tightness.

   b. All tanks shall be furnished with inlet grommet(s) to accept a 6" nominal diameter PVC SDR 35 sewer house connection and comply with ASTM D 3034 and F1336.

5. Accessways: The accessways shall be of corrugated HDPE as specified for the tank for the required Model unit(s). It shall have an access opening at the top with a lockable cover with skirt capable for supporting a 150 pound per square foot loading.

   a. The accessway shall be an integral extension of the tank and include a tamper-proof cover assembly with water-tight capability.

   b. The basin shall have all necessary penetrations molded in and factory sealed. Field penetrations will be prohibited.

   c. All discharge piping within and penetrating the basin shall be 340 stainless steel and terminate outside the basin with a 1 ¼ inch female NPT fitting. The discharge piping shall include a stainless steel ball valve rated for 200 psi. All penetrations shall be warranted to be watertight.

   d. The accessway shall include a single NEMA 6P electrical quick disconnect for all power and control functions, factory installed with accessway penetrations warranted to be water tight. The accessway shall also include a 2 inch PVC vent to prevent sewage gases from accumulating in the tank. Junction boxes within the basin are prohibited.

6. Pump Core Units

   a. The grinder pump shall have a cartridge type easily removable core assembly containing pump, motor, grinder, polypropylene rope, stainless steel valve actuator, controls, check valves, anti-siphon valve and wiring. The core unit shall have two lifting eyes provided in the top housing to facilitate easy removal of the core unit from the tank if necessary. The core mounting plate shall be equipped with captive mounting bolts which permit installation/removal of the cores from the surface without entering the accessway by means of a long-stem wrench.

b. The watertight integrity of the core unit, including wiring and access cover, shall be established by 100% factory test at a minimum of 5 psi.

c. The Contractor shall furnish the following additional spare pump core, identical to the approved pump cores, and deliver it to the Sod Run Wastewater Treatment Plant in Perryman, Maryland, Attention Maintenance Supervisor according to the following schedule:

Number of Grinder Pumps	Number of Required Spare Cores
2 – 20 units	1 core
21 – 50 units	2 cores
51 – 150 units	5 cores

7. Pumps: Each pump shall be an integral, vertical rotor, motor driven, solids handling pump of the progressing cavity type with mechanical seal. The rotor shall be through-hardened, high polished, precipitation hardened stainless steel. The stator shall be of a specifically compounded ethylene propylene synthetic elastomer. The material shall be suitable for domestic wastewater service. its physical properties shall include high tear and abrasion resistance, grease resistance, water and detergent resistance, temperature, stability, and wear resistance. The pump shall have a two-bearing design including both upper and lower ball bearings. Sleeve bearings will not be acceptable.

8. Grinder

a. The grinder shall be positioned immediately below the pumping element and shall be direct-driven by a single, one-piece, motor shaft. The grinder impeller assembly shall be securely fastened to the pump motor shaft by means of a threaded connection attaching the impeller to the motor shaft. Attachment by pins or keys are prohibited.The grinder shall be a one-piece forged 4140 cutter wheel of the rotating type with inductively hardened cutter teeth (Rockwell 55-58c). The shredder ring shall have a staggered tooth pattern with only one edge engaged at a time. This assembly shall operate without objectionable noise or vibration over the entire range of recommended operating procedures.

b. The grinder shall be constructed so as to eliminate clogging and jamming under all normal operating conditions including starting. Sufficient vortex action shall be created to scour tank free of deposits or sludge banks which would impair the operation of the pump. These requirements shall be accomplished by the following items in conjunction with the grinder pump tank.

i. The grinder shall be positioned in such a way that solids are fed in an up-flow direction.

ii. At maximum flow rate through the cutting mechanism must not exceed 4 feet per second.

iii. The impeller must rotate a nominal speed of no greater than 1800 rpm.

9. Electric Motor

a. The motor shall be 1HP, minimum, 1725 rpm, 240 volt, 60 hz, single phase, capacitor start, ball bearing, squirrel cage induction type with a low starting current not to exceed 30 amperes and a high starting torque of 8.4 foot pounds.

b. The motor shall have inherent protection against overloads or locked rotor conditions by the use of a UL-listed, automatic-reset, integral thermal overload protector incorporated into the motor. Non-capacitor start motors or permanent split capacitor motors shall be prohibited.

10. Seal

a. The pump core shall be provided with a mechanical shaft seal to prevent leakage between the motor and pump. The seal shall have a stationary ceramic seat and carbon rotating surface with faces precision lapped and held in place with a stainless steel spring.

11. Check Valve: The pump discharge shall be equipped with a factory installed, check valve that is built into the discharge pipe. The valve shall be constructed with a HDPE housing and stainless steel interior components. The valve will provide a full-port passageway when open and shall produce a friction loss of less than 6-inches of water at maximum rated flow. Working parts shall be made of 300 series stainless steel. The valve operation shall provide maximum seating capability, even at very low back pressure. The check valve will provide a full-ported passageway when open. Working parts will be made of a 300 series stainless steel and fabric reinforced synthetic elastomer. Ball-type check valves shall be prohibited.

12. Controls

a. All necessary controls shall be located in the top housing of the core unit. The top housing will be attached with stainless steel fasteners. All controls shall be wired.

b. Non-fouling waste water level detection for controlling pump operation shall be accomplished by monitoring the pressure changes in an integral air-bell level sensor connected to a pressure switch. The level detection device shall have no moving parts in direct contact with the waste water. High-level sensing will be accomplished in the manner detailed above by a separate

air-bell sensor and pressure switch of the same type. Float switches are not acceptable.

c. To assure reliable operation of the pressure sensitive switches, each core shall be equipped with an equalizer diaphragm that compensates for atmospheric pressure or temperature changes.

d. The grinder pump will be furnished with a length of 6 conductor 14 gauge, type SJOW cable, pre-wired and watertight to meet UL requirements. This cable shall be installed in a 1 ½" PVC conduit that runs from the control cabinet to the grinder pump.

e. The Contractor and home builder shall coordinate the ordered length of control/power cable between the grinder pump location and the control panel. Unless the houses and proposed control panel locations are shown on the construction drawings or otherwise specified, the Contractor shall order a minimum 100 feet of control/power cable for each pump core. The control/power cable between the grinder pump disconnect and the pump control panel shall be one piece with no splices. The maximum length shall not exceed 150’ unless approved modifications are made by the grinder pump manufacturer.

13. Pump Control Panel

a. The pump control panel shall be Simplex Sentry as manufactured by the Environment/One Corporation, 2773 Balltown Road, Niskayuna, New York or approved equal. The entire pump control panel as specified shall be listed by Underwriters Laboratories, Inc.

b. Each sewage grinder pumping unit shall include a NEMA 4x, UL listed pump control panel suitable for mounting on the exterior of a residential dwelling. The NEMA 4x enclosure shall be manufactured of UV-stabilized thermal plastic. The enclosure shall include a hinged, pad-lockable cover secured dead front (protection from exposed wires), and component knockouts.

c. For each pump core, the control panel shall contain one (1) 15 amp dedicated double pole circuit breaker for the power circuit and one (1) 15 amp dedicated single pole circuit breaker for the alarm circuit. The control panel shall also contain one (1) 15 amp dedicated single pole circuit breaker for a 120 VAC, 15 amp rating, service with integral GFC outlet.

The outlet shall only be accessible by opening the control panel cover. The control panel shall contain at least but not be limited to terminal blocks, integral power bus, push to run feature, and a complete alarm circuit.

d. The visual alarm lamp shall be inside a red fluted lens at least 2 5/8" in diameter and 1 11/16" in height. The visual alarm shall be mounted to the top of the pump control in such a manner as to maintain NEMA 4X rating.

e. The audio alarm shall be a printed circuit board in conjunction with an 93-dB buzzer with a quick mounting terminal strip mounted in the interior of the enclosure. The audio alarm shall be capable of being de-activated by depressing a push-type switch which is encapsulated in a weather proof silicone boot and mounted on the bottom of the enclosure.

14. Interior Piping

a. All discharge piping and fittings shall be 300 series stainless steel.

15. Warranty

a. The grinder pump manufacturer shall provide a parts and labor warranty on the entire sewage grinder pumping unit and accessories including but not limited to control panel, electrical parts, pump core, tank basin and integral accesway, cabling and internal piping, valves and appurtenances for a period of 24 months after pump core is placed into service. All service calls during this 24-month period will be deemed necessary as warranty work unless the repairs are due to non-equipment related failures or damage such as vandalism, damage to vehicular traffic, etc. When the Division of Water and Sewer receives a service call request from the customer, they will report to the site and restore the service as soon as possible. If the failure or damage is of no fault of the Division of Water and Sewer or the customer, the Division will backcharge the Developer or Contractor as per the Public Works Utility Agreement or the Contract Documents. If the core unit is deemed defective, the County will contact the manufacturer/supplier and have it picked up from the Sod Run Waste Water Treatment Plant located at 1212 Chelsea Road for repair or replacement. The repaired or replacement core must be returned to the Sod Run Waste Water Treatment Plant within three (3) working days after the notification. Harford County shall not be responsible for any labor, freight, transportation, taxes or any other costs associated with service deemed as warranty work.

The Contractor shall supply the Division of Water and Sewer with the 24-hour telephone number of the pump manufacturer/supplier representative who will be responding to warranty service calls.

16. Level Sensor

a. Non-fouling wastewater level detection for controlling the grinder pump and alarm operation shall be accomplished by use of a detection mechanism specifically designed for use in a sewage grinder pump basin. Level detection shall not require any regular maintenance. The control assembly

shall be specifically approved by Underwriters Laboratories. Conventional mercury, mechanical or swing arm floats will not be acceptable. All electrical wires to the level detection shall have electrical quick disconnects. (NEMA 6P).

17. Shut-off Valve

    a. The grinder pump discharge piping shall be equipped with a factory-installed, full port, stainless steel manual ball valve with a minimum rated pressure of 235 psi. The valve shall be equipped with a stainless steel valve wrench terminating within 18-inches of the accessway. Each valve wrench shall be stored within the upper confines of the accessway.

18. Anti-Siphon Capability

    a. The pump shall be constructed with a positively primed flooded suction configuration. As added assurance that the pump cannot lose prime even under negative pressure conditions in the discharge piping system, the design shall provide protection against siphoning. This device will automatically close when the pump is running and open to atmosphere when the pump is off. Use of small-diameter orifices in the discharge piping between the pump and check valve for anti-siphoning purposes is not acceptable. The anti-siphon valve shall be a gravity-operated, flapper-type valve built into the discharge piping. Moving parts shall be made of 300 stainless steel and fabric-reinforced synthetic elastomer.

19. Padlocks

    The Contractor shall provide one padlock each for the breaker panel, control panel and grinder pump basin. The padlock shall be Masterlock with rubberized weatherproof coating and keyed to Harford County Standard.

3.0 EXECUTION

A. Factory Test

1. All components for the sewage grinder pumping unit shall be factory tested and certified. Certified test results shall be available upon request by the Division of Water and Sewer. The Division of Water and Sewer reserves the right to inspect such testing procedures with representatives of the grinder pump manufacturer at the manufacturer's facilities and at their expense.

   All completed stations shall be factory leak tested to assure the integrity of all joints, seams and penetrations. All necessary penetrations such as inlets, discharge fittings, and cable connections shall be included in this test along with their respective sealing means (grommets, gaskets, etc.).

B. Delivery

1. All grinder pump tanks, including ball valve, quick disconnect, and watertight penetrations, shall be delivered to the job site 100% complete assembled including testing, ready for installation. Grinder pump tanks shall be individually mounted on wooden pallets.

C. Installation

1. Earth excavation and backfill shall be specified in accordance with the Standard Specifications and/or these Specifications and the Drawings, are also are to be done as a part of the work under this section including any necessary sheeting and bracing. The contractor shall be responsible for control of groundwater to provide a firm, dry subgrade for the structure and shall guard against flotation or other damage resulting from general water or flooding. The grinder pump stations shall not be set into the excavation until the installation procedures are excavation have been approved by the Inspector.

2. Remove packing material. Users instruction MUST be given to the Inspector. Hardware supplied with the unit, if required, will be used at time of installation. The basin will be supplied within one (1) flexible inlet grommet for simplex pump and two (2) flexible inlet grommets for duplex pumps for connecting the incoming sewer line. Appropriate inlet piping must be used. When moving tank, it should be lifted using all four (4) lifting eyes provided at the lower end of the basin. Do not use these eyes if a concrete collar has been attached to the tank. The basin may not be dropped, rolled, or laid on its side for any reason.

3. A 6-inch layer (minimum) of washed No. 57 stone shall be used as bedding material under each unit. A concrete antiflotation collar, as detailed on the drawings and details and sized according to the manufacturer's instructions, shall be required and shall be precast to the grinder pump basin or poured in place. Each grinder pump basin with its precast antiflotation collar shall have a minimum of three (3) lifting eyes for loading and unloading purposes. The unit shall be leveled and filled with water to the bottom of the inlet to help prevent the unit from shifting while the concrete is being poured. The concrete must be manually vibrated to ensure there are no voids. The concrete may not extend any higher than the invert of the inlet piping. The contractor may not construct pre-cast concrete "blocks" which are fastened to the grinder pump basin by means of bolts. All antiflotation concrete collars must be cast-in place integrally with the pump basin, either above or below ground. If precast below ground, the concrete shall be allowed to cure a minimum of 24-hours prior to backfill.

4. The contractor shall provide and install grinder pump house connection piping as shown on the Drawings.

5. Backfill with wash no. 57 stone from top of concrete antiflotation collar to six inches (6”) minimum above grinder pump discharge pipe, then backfill in accordance with the Contract Documents. Improper backfilling may result in damaged accessways.

6. Upon completion of backfilling, Contractor shall place the stainless steel valve actuators within each grinder pump basin and re-secure the pump basin lid.

7. It is extremely important that the finished grade shall slope away from the surface of the grinder pump.

8. All restoration will be the responsibility of the contractor. Per unit costs for this item shall be included in the contractor’s bid price for the individual grinder pump stations. All properties shall be restored to their original condition in all respects including, but not limited to, curb and sidewalk replacement, landscaping, topsoil and seeding, and restoration of the traveled ways as directed by the Inspector.

9. Any pre-purchased control wire and control panels which are not required to be installed at the time of the grinder pump installation shall be kept in the suppliers inventory and not stored within the grinder basins.

D. Commissioning Procedures Post-Utility Construction for Developer Projects

For Developer projects, the following procedures have been established on installing the plumbing and electrical connections to the grinder pumps as well as start-up and testing. These procedures are primarily aimed at the homebuilder.

1. The grinder pump basin and cleanouts shall be protected from damage during the construction of the home(s). Protection shall at a minimum consist of 4 foot high orange safety fence installed a minimum of 5 feet beyond the grinder pump basin and cleanouts. These facilities have been inspected and approved as part of the operational process. Any damage to these facilities from the homebuilder or his subcontractors shall be repaired or replaced if necessary by a Harford County approved licensed utility contractor at the homebuilder’s expense.

2. Under an electrical permit, the homebuilder shall have a licensed electrician install the electrical service and control panel in conformance with the standard details. Homebuilder is responsible for acquiring the control panel, controls, alarm system and control/power cable from the pump supplier. These components shall have been pre-purchased by the utility contractor. For duplex grinder pumps, each house will have electrical power and controls that only operate the pump for that house.

3. Under a plumbing connection permit, the homebuilder shall have a licensed plumber install the sewer service between the house and existing cleanout.

4. The ground around the grinder basin must be graded to the finished grades for inspection at start-up. The start-up test will be cancelled if the ground is not properly graded. At no times shall the grinder pump basin be within a sump area. The site

drainage shall freely drain stormwater away from the grinder basin. If this cannot be achieved, the homebuilder shall contact the pump supplier to have an extension piece installed by the pump supplier, at the homebuilder's cost. There must be a minimum of 6-inches from the top of the grinder basin lid and finished grade (including sod). If the 6-inch clearance cannot be met the homebuilder shall have the pump manufacturer install a riser section, at the homeowner's cost.

5. Once the electrical and plumbing work is complete, the homebuilder shall schedule for a pump start-up with a minimum 1 week advance notice. Notification shall be to the pump supplier with (1) the test date and time, (2) property address and (3) homebuilder contact name and phone number. The same notification shall also be to Harford County Water and Sewer Pump Station Operations Maintenance Superintendent.

6. Just prior to the start-up test, the homebuilder shall have a septic hauler with vacuum capabilities on-site to thoroughly clean all stones and debris from the bottom of the pump basin.

7. At the day of the start-up, water must be available by the homebuilder to fill the basin, as needed, to test the pump.

8. The following people must be present at the start-up test: Homebuilder, homebuilder's electrician, pump supplier technician, and Harford County Operations Maintenance Superintendent.

9. The pump supplier technician will then test all of the electrical connections and inspect the installation. If all is acceptable to the pump supplier and Harford County, the pump supplier technician will install the pump core and check its operation. If all operations are successful the pump may be put into service.

10. Upon satisfactory start-up the grinder pump, the homebuilder shall provide a copy of the grinder pump notification information to the new homeowner at settlement or sooner.

11. Submit affidavit described in Section 1.0.

E. Commissioning Procedures Post-Utility Construction for Capital Projects

1. Under an electrical permit, the Contractor shall have a licensed electrician install the electrical service, circuit breaker, control panel, and all required wiring and conduit in accordance with the Contract Documents. The licensed electrician shall be responsible to contact BGE for coordination of a separate service into the BGE meter.

2. The ground around the grinder basin must be graded to the finished grades with seed and mulch for inspection at start-up. At no time shall the grinder pump basin

be within a sump area. The site drainage shall freely drain stormwater away from the grinder basin.

3. Once the electrical work and grading is complete, the Contractor shall schedule for a pump start-up and test with a minimum 1 week advance notice. Notification shall be to the pump supplier with (1) the test date and time and (2) property address. The same notification shall be made to the Harford County project manager, inspector and the Division of Water and Sewer, Maintenance Supervisor, or his designated representative. The Contractor, pump supplier, Harford County project manager, inspector, and Harford County Maintenance Superintendent must all be present at the start-up and test.

4. Just prior to the test, the Contractor shall have a septic hauler with vacuum capabilities on-site to thoroughly clean all stones and debris from the bottom of the pump basin.

   At the day of the start-up, the Contractor shall have clean potable water in tanks available to fill the grinder pump basin. It is prohibited to utilize water from the homeowner.

5. The pump supplier shall provide the services of a qualified factory-trained technician who shall inspect the placement and wiring of each installation and perform tests below.

   a. Check electrical continuity of all circuits.
   b. Determine if proper voltage is provided to the unit.
   c. Check entire site for proper installation.
   d. Install test-pump and open all discharge piping.
   e. After contractor fills basin with water, verify high level alarm.
   f. Initiate pump operation to verify automatic controls are functioning properly.

6. Once the sewage pumping unit is accepted by the factory-trained manufacturer's representative, the technician shall complete the start-up completion report. The test-pump shall then be removed from the pump basin. The discharge valves shall be in the closed position. All new pump cores shall be retained in inventory with the local pump supplier until notified that the homeowner is ready for connection to the system.

7. For Vacant Lots – The Contractor is not responsible to perform procedures 1 through 7 above. At the time of site development, the homebuilder will be required to follow the Commissioning Procedures for developer projects.

8. Submit affidavit described in Section 1.0

4.0 METHOD OF MEASUREMENT

A. Measurement for Sewage Grinder Pumping unit installations will be made of the number of Sewage Grinder Pumping units satisfactorily installed as shown on the plans or directed by the County.

5.0 BASIS OF PAYMENT

A. General

1. Payment will be made at the unit price bid. The price bid shall include furnishing all labor, tools, equipment, and materials necessary to satisfactorily complete the work as shown as specified in strict accordance with the Contract Documents.

2. The price (s) bid for furnishing and installing Sewage Grinder Pumping units shall include the following:

a. Trench excavation, backfill, compaction and incidental items specified in Section 02250 and elsewhere.

b. Cast-in-Place concrete, Section 03300.

B. Sewage Grinder Pumping Units

1. Payment for furnishing and installing Sewage Grinder Pumping units, complete, in-place, will be made per each Sewage Grinder Pumping unit placed. The price bid shall include all sediment and erosion control, traffic control, excavation, removal and disposal of spoil materials; furnishing and placing cast-in-place concrete, furnishing and placing washed gravel beneath unit and around basin, backfill and compaction, restoration, warranty and for incidental items to complete the installation.

This page has been intentionally left blank.

STANDARD DETAILS

Issued: 3/15/09

STANDARD GENERAL DETAILS
TABLE OF CONTENTS

	DESCRIPTION	ISSUED
G1	- Standard Symbols	7/1/98
G2	- Water and Sewer Services for Single Family Lots	11/10/14
G3	- Water and Sewer Services for Townhouse Lots	11/10/14
G3a	- Water and Sewer Services for Townhouse Lots with 7' or Less Between Driveways	11/10/14
G4	- Water and Sewer Services for Two Panhandle Lots	11/26/03
G5	- Water and Sewer Services for Three Panhandle Lots	11/26/03
G6	- Water and Sewer Services for Four Panhandle Lots	11/26/03
G7	- Clearances for Services Connections for Water and Sewer Mains	7/1/98
G8	- Trench Payment Widths	3/15/09
G9	- Jacking or Boring	11/10/14
G10	- Tunneling	3/15/09
G11	- Project Sign	4/17/01
G12	- NOT USED	DELETED
G13	- Security Fence	7/1/98
G14	- Continuity Test Station	4/17/01
G15	- Concrete Encasement and Cradles	4/17/01
G16	- Access Drive	3/15/09
G17	- Access Drive Barrier	11/10/14
G18	- Method of Strapping Flexible Couplings in Vaults and Facilities	3/15/09
G19	- DIP to HDPE Transition Connection	3/15/09
G20	- Method of Connecting DIP to Existing Water Main Requiring Shutdown	3/15/09
G21	- Tree and Shrub Planting Detail	11/10/14

1) INK ALL EXISTING FEATURES
2) SHOW ALL EXISTING TOPO
3) SHOW ALL EXISTING UTILITIES
4) PROPERTY LINES AND DISTANCES
5) FIRST FLOOR AND CELLAR ELEVATIONS
6) PARCEL AND HOUSE NUMBERS
7) LOT NUMBERS, OWNERS, RECORDINGS, AND TAX ACCOUNT NUMBERS
8) POLES-TYPE AND NUMBER
9) R/W AND PAVING WIDTHS SHOWN
10) ℄ STATION ON ROADS
11) BANKS AND DITCHES
12) SUBDIVISION-NAME AND RECORDING
13) ROAD NAMES AND ADDRESSES
14) SIZES AND TYPE OF PIPE
15) INVERTS OF EXISTING PIPES

CENTER LINE

ROAD CENTER LINE — 1+00, 2+00, P.T.-P.C., P.I.

EXISTING CONTOUR LINES — 420

EXISTING PAVING — 30'

EXISTING WATER — EX. 8" W

EXISTING SEWER — EX. 8" SAN.

EXISTING STORM DRAIN — 12" R.C.P.S.D.

EXISTING GAS — 4" GAS

EX. ELECTRIC CONDUIT — C C

EX. TELEPHONE CONDUIT — T T

GUARD RAIL

WIRE FENCE — X X

WOOD FENCE

PROPOSED SANITARY SEWER — MH 22, 12"S

PROPOSED WATER — 8"W, 8"V, 8"x6"T

LOT & PROPERTY LINES

R/W LINES

UTILITY POLE

GUY WIRE

VALVES — W.V., G.V.

FIRE HYDRANT

MANHOLES — (S) SANITARY, (D) STORM DRAIN

TEST BORING

TREES — DECIDUOUS, CONIFEROUS

TREE LINE — WOODS

HEDGES

BANK

DITCH

STREAM

SWAMP

WATER FRONT

BRIDGE

BENCHMARK

K-1, K-2, K-3 TRAVERSE

K-2
N 581,324.11
E 1001,521.31
ELEV. 24.14

CULVERT — INV. 46.01, INV. 45.61, HEADWALL, 15" CMP

HARFORD COUNTY, MD
DEPARTMENT OF PUBLIC WORKS
Robert B Cooper

STANDARD GENERAL DETAILS

STANDARD SYMBOLS

ISSUED 7/1/95
REVISED
REISSUED 3/15/09
PLATE G-1

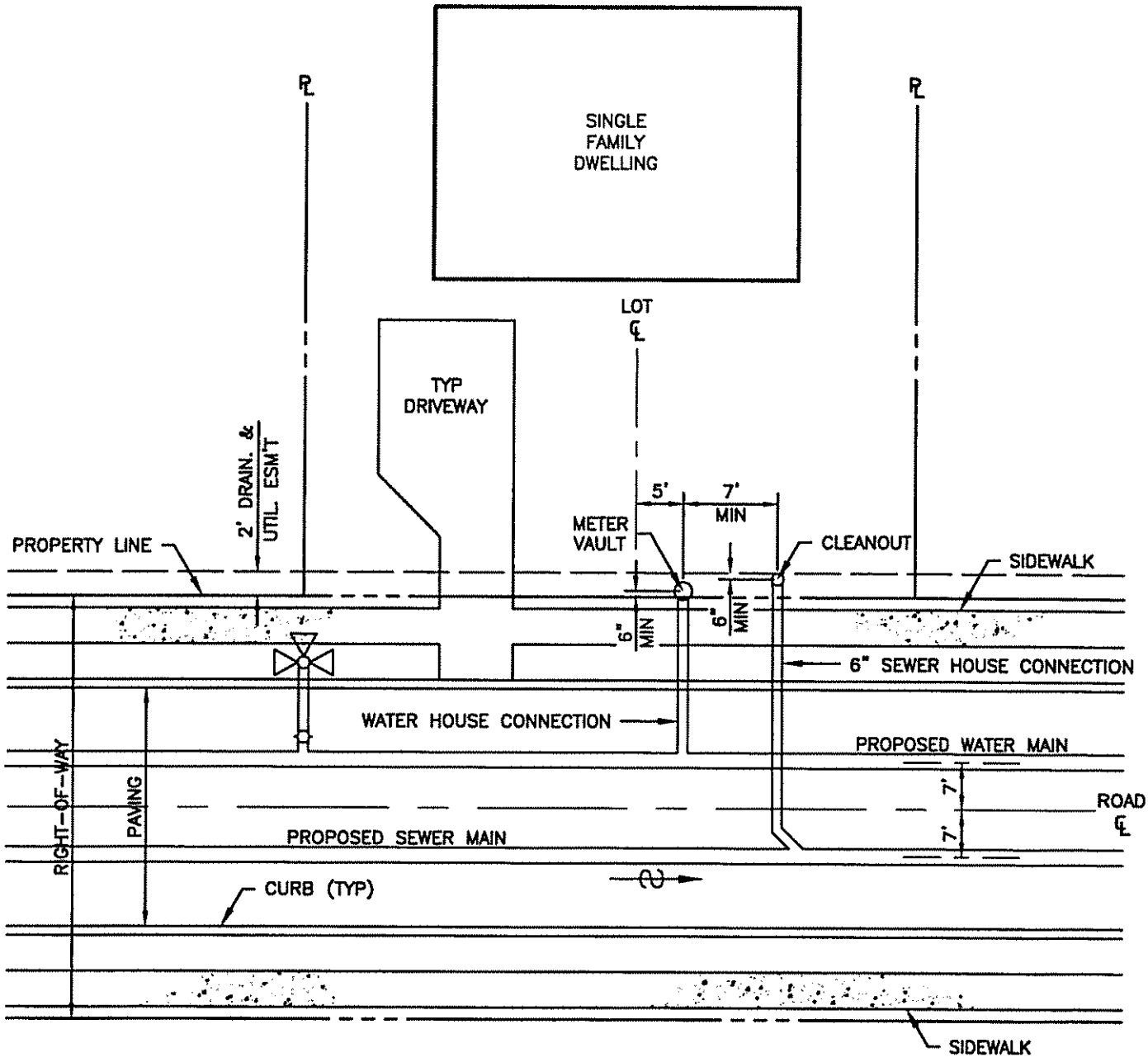

NOTES:

1. METER VAULT AND CLEANOUTS SHALL NOT BE LOCATED IN DRIVEWAYS, SIDEWALKS OR STEPS.
2. PLACE UTILITIES ON LOW SIDE OF LOT.
3. MINIMUM SEPARATION BETWEEN WATER AND SEWER SERVICES IS SEVEN (7) FEET.
4. REFER TO THE APPROVED CONSTRUCTION DRAWINGS FOR SPECIFIC SERVICE LOCATIONS. IN CASE OF CONFLICT BETWEEN THIS DETAIL AND THE APPROVED CONSTRUCTION DRAWINGS. THE APPROVED CONSTRUCTION DRAWINGS SHALL GOVERN.

HARFORD COUNTY, MD DEPARTMENT OF PUBLIC WORKS	STANDARD GENERAL DETAILS	ISSUED 07/88 REVISED 11/10/14
	WATER AND SEWER SERVICES FOR SINGLE FAMILY LOTS	PLATE G-2

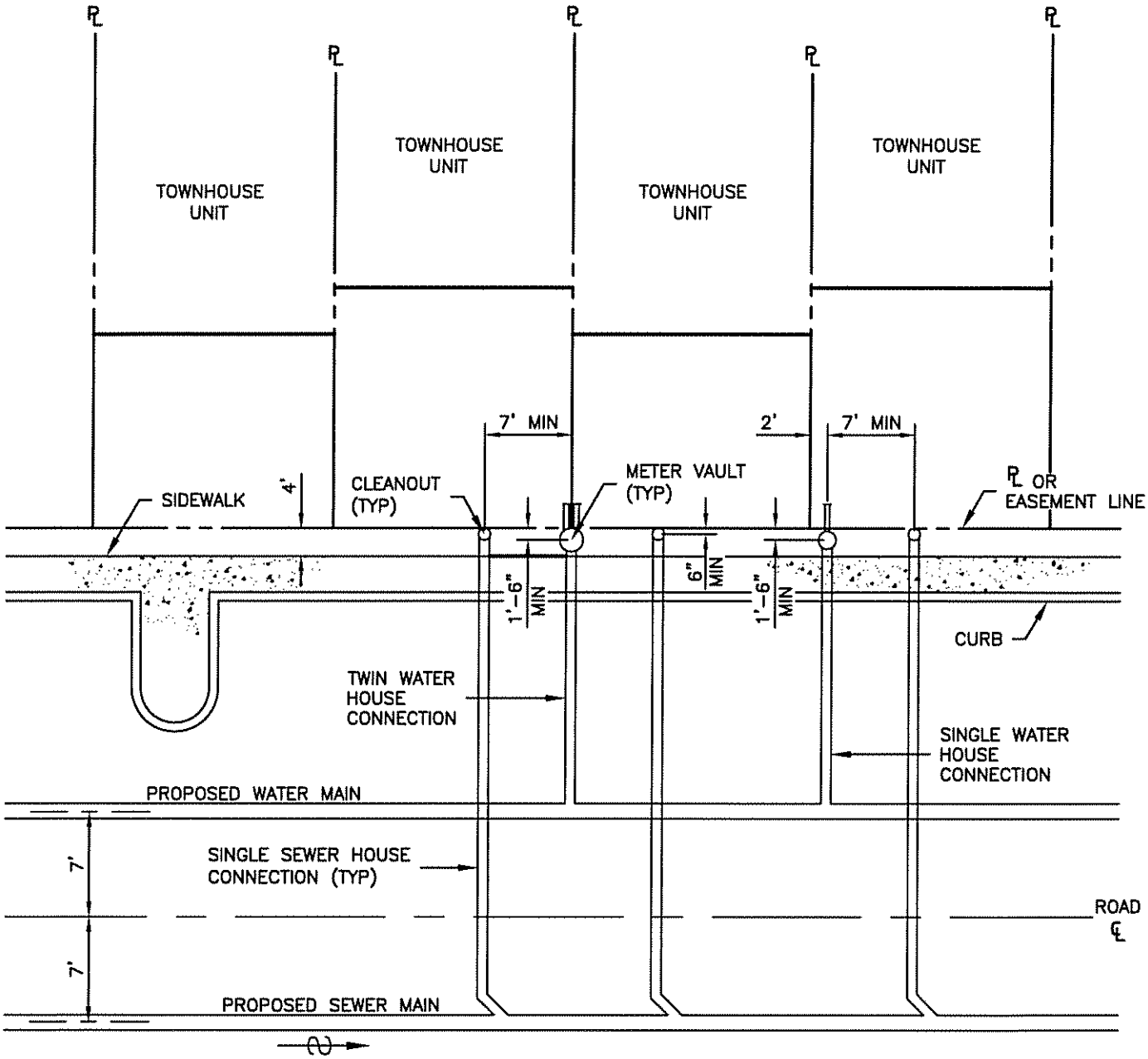

NOTES:

1. METER VAULTS AND CLEANOUTS SHALL NOT BE LOCATED IN SIDEWALKS OR STEPS.
2. IN TOWNHOUSE UNITS WITHOUT PERPENDICULAR PARKING, AN ADDITIONAL TWO (2) FOOT DRAINAGE AND UTILITY EASEMENT IS REQUIRED. METER VAULTS AND CLEANOUTS SHALL BE LOCATED AS SHOWN ON PLATE G-2.
3. PLACE UTILITIES ON LOW SIDE OF LOT.
4. MINIMUM SEPARATION BETWEEN WATER AND SEWER SERVICES IS SEVEN (7) FEET.

HARFORD COUNTY, MD DEPARTMENT OF PUBLIC WORKS	STANDARD GENERAL DETAILS WATER AND SEWER SERVICES FOR TOWNHOUSE LOTS	ISSUED 07/98 REVISED 11/10/14 PLATE G-3

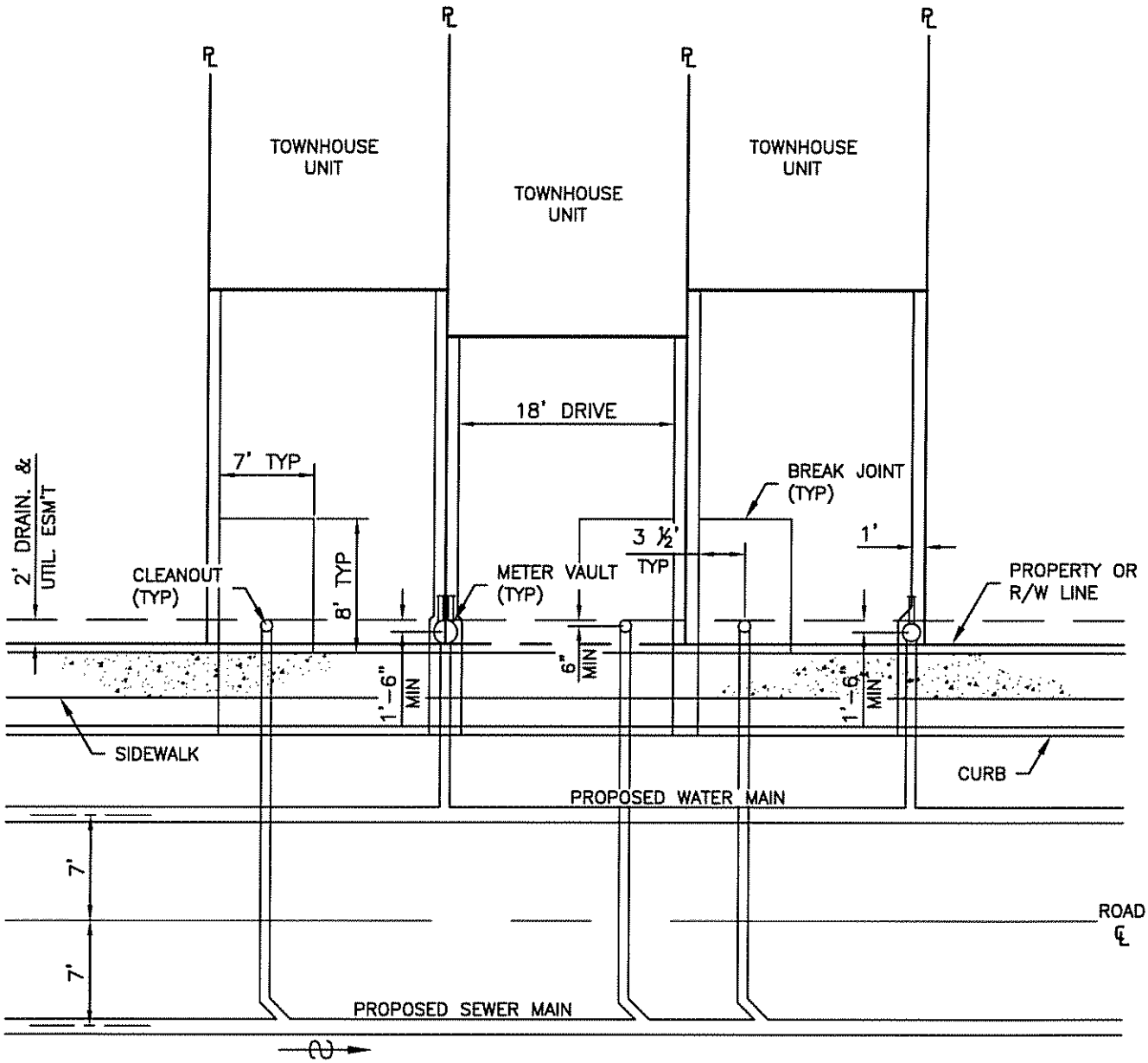

NOTES:

1. METER VAULTS SHALL NOT BE LOCATED IN DRIVEWAYS, SIDEWALKS OR STEPS. DRIVEWAYS SHALL BE TAPERED AS REQUIRED.
2. ALL CLEANOUTS SHALL USE TRAFFIC BEARING FRAME & COVER PER STD DETAIL S-28.
3. MINIMUM SEPARATION BETWEEN WATER AND SEWER SERVICES IS SEVEN (7) FEET.

HARFORD COUNTY, MD DEPARTMENT OF PUBLIC WORKS	STANDARD GENERAL DETAILS WATER AND SEWER SERVICES FOR TOWNHOUSE LOTS WITH 7' OR LESS BETWEEN DRIVEWAYS	ISSUED 11/10/14 REVISED PLATE G-3a

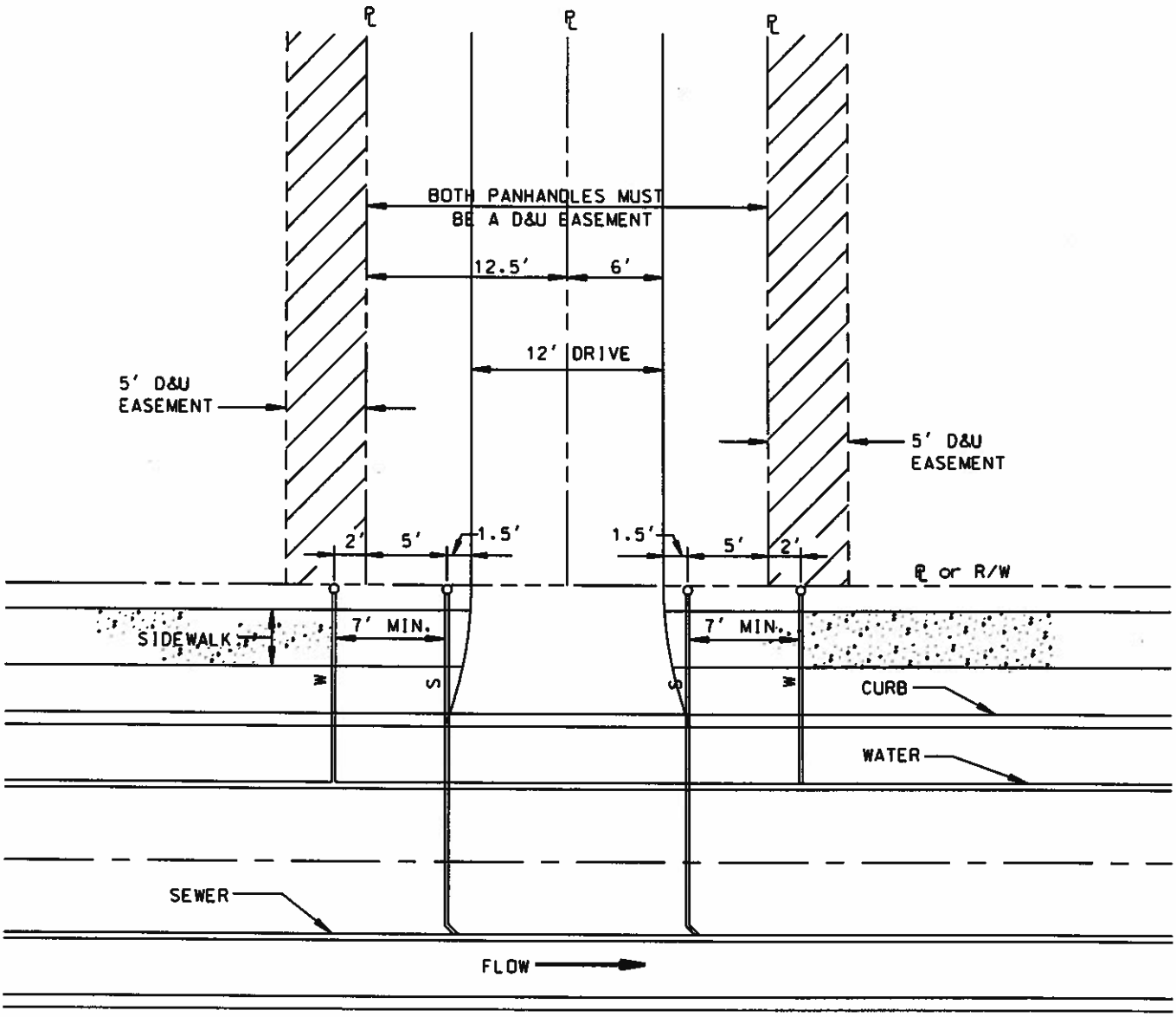

2 PANHANDLE LOTS

NOT TO SCALE

HARFORD COUNTY, MD
DEPARTMENT OF PUBLIC WORKS

Robert B Coogle

STANDARD GENERAL DETAILS

WATER AND SEWER SERVICES FOR TWO PANHANDLE LOTS

ISSUED 7/98
REVISED 11/26/03
REISSUED 3/15/09

PLATE G-4

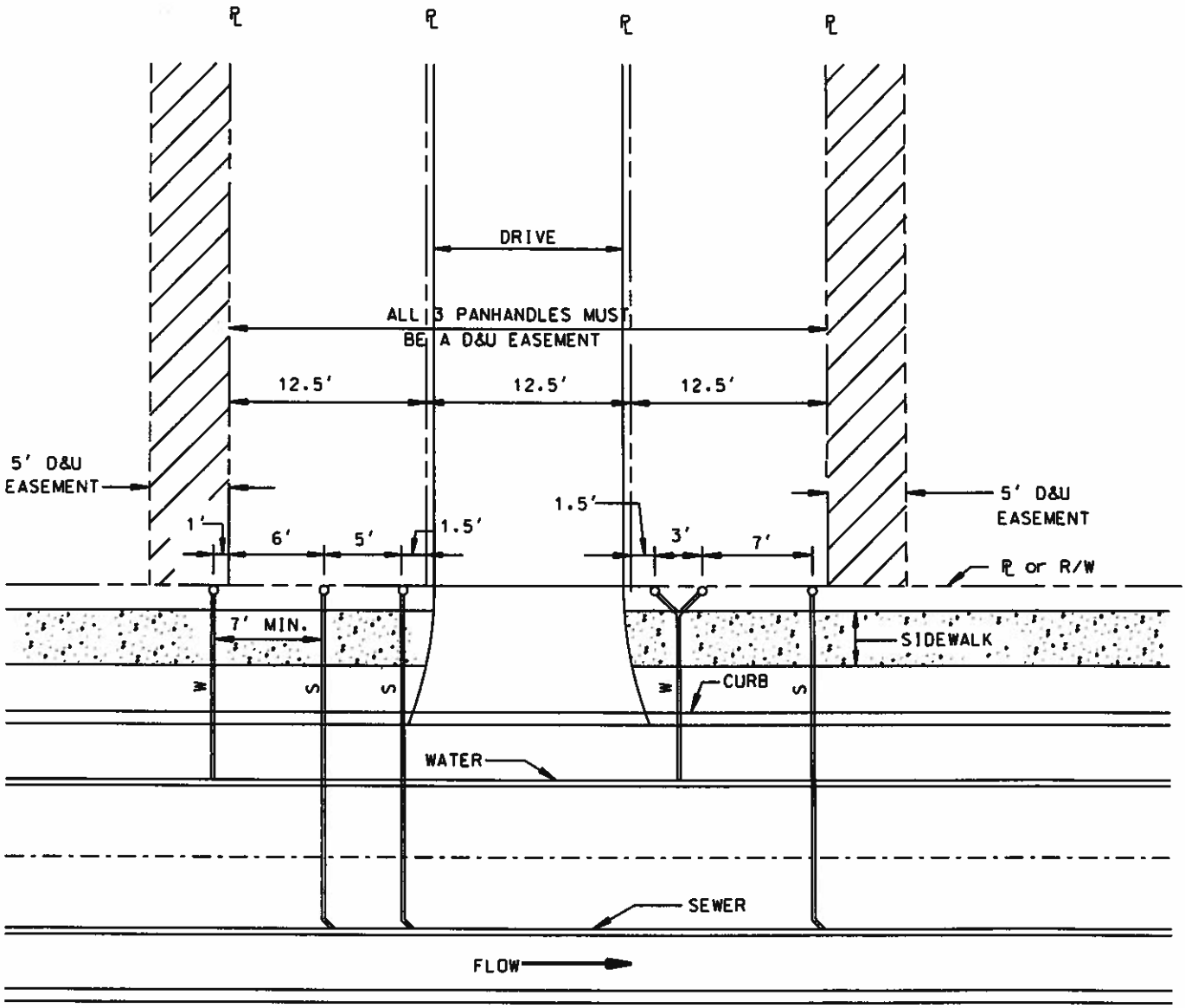

3 PANHANDLE LOTS

NOT TO SCALE

HARFORD COUNTY, MD
DEPARTMENT OF PUBLIC WORKS
Robert B Cooper

STANDARD GENERAL DETAILS

WATER AND SEWER SERVICES FOR THREE PANHANDLE LOTS

ISSUED 7/98
REVISED 11/26/03
REISSUED 3/15/09

PLATE G-5

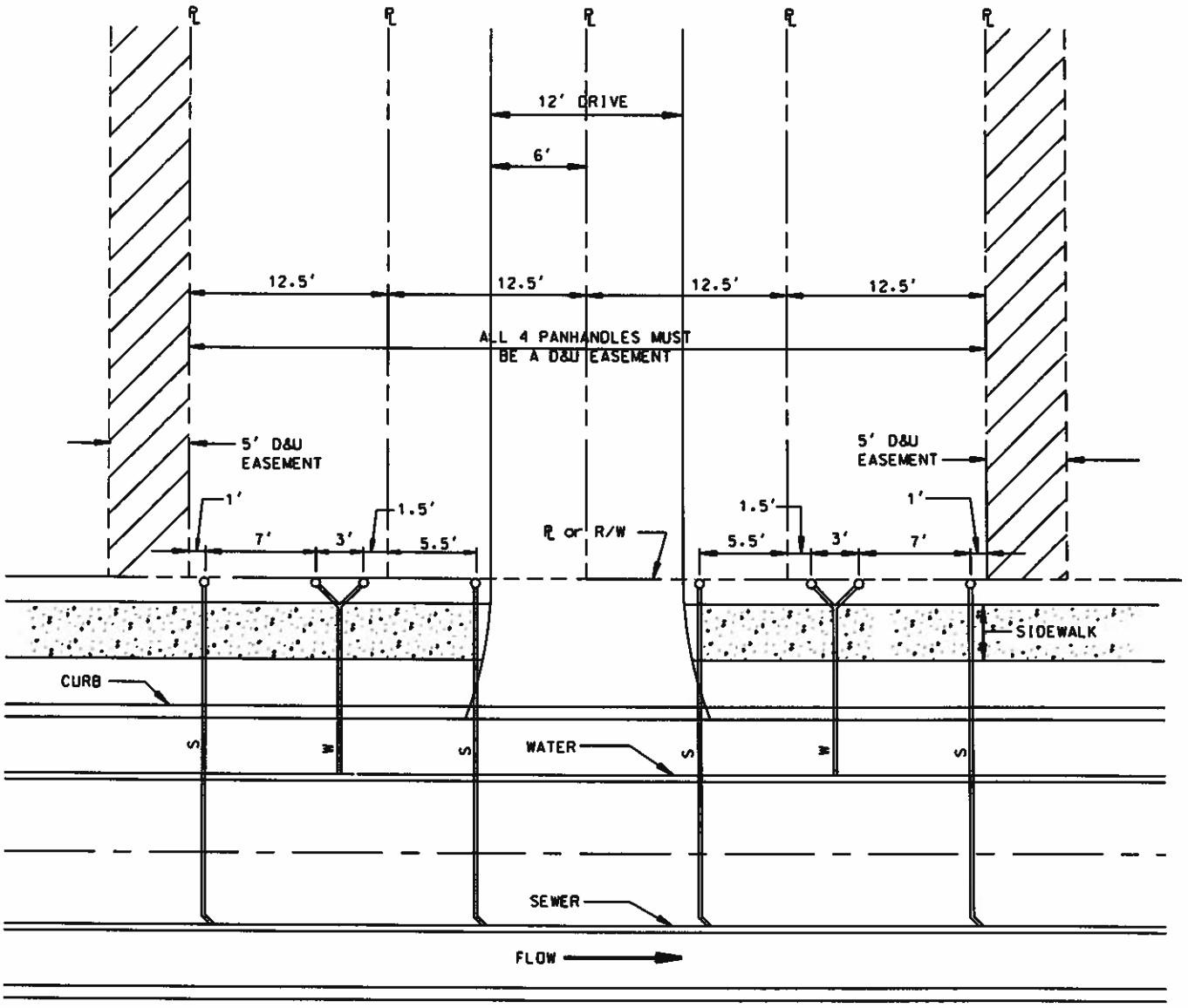

4 PANHANDLE LOTS

NOT TO SCALE

HARFORD COUNTY, MD
DEPARTMENT OF
PUBLIC WORKS

Robert B Cooper

STANDARD GENERAL DETAILS

WATER AND SEWER SERVICES
FOR FOUR PANHANDLE LOTS

ISSUED	7/98
REVISED	11/26/03
REISSUED	3/15/09
PLATE	G-6

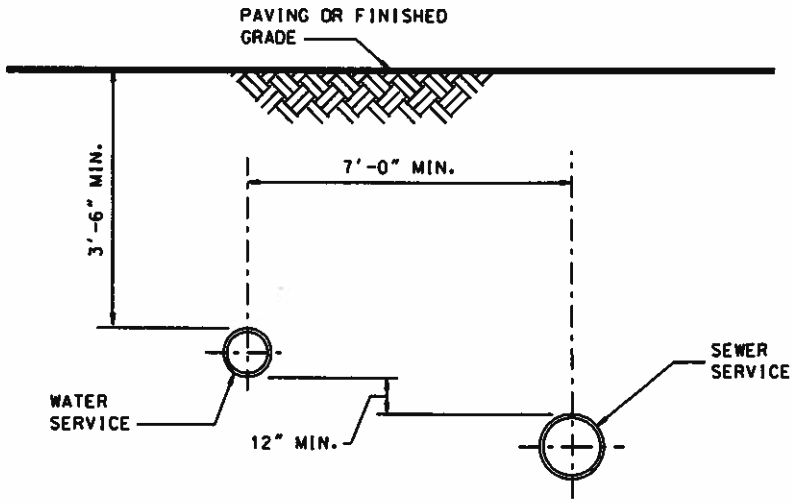

WATER & SEWER HOUSE SERVICES

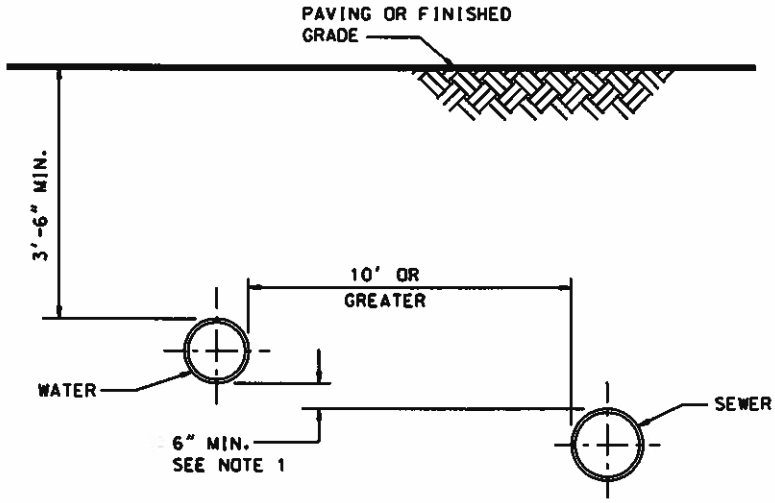

WATER AND SEWER MAINS

NOTES: *(UNLESS NOTED OTHERWISE PERTAINS TO BOTH DETAILS)*

1. WHERE WATER AND SEWER MAINS HAVE A HORIZONTAL SEPARATION LESS THAN 10'-0". THE WATER MAIN SHALL BE 6'- 0" MIN. ABOVE THE SEWER.
2. WHERE WATER CROSSES ABOVE SEWER, A MINIMUM CLEARANCE OF 1'-0" IS REQUIRED. CLEARANCE LESS THAN 1'-0", PROPOSED UTILITY (PREFERABLY SEWER) SHALL BE ENCASED IN CONCRETE TO 10 L.F. ON BOTH SIDES OF CROSSING.
3. WHERE SEWER CROSSES ABOVE WATER, PROPOSED UTILITY (PREFERABLY SEWER) SHALL BE ENCASED IN CONCRETE TO 10 L.F. ON BOTH SIDES OF CROSSING.

HARFORD COUNTY, MD
DEPARTMENT OF PUBLIC WORKS
Robert B Cooper

STANDARD GENERAL DETAILS

CLEARANCES
SERVICE CONNECTIONS
WATER & SEWER MAINS

ISSUED 7/1/98
REVISED
REISSUED 3/15/09
PLATE G-7

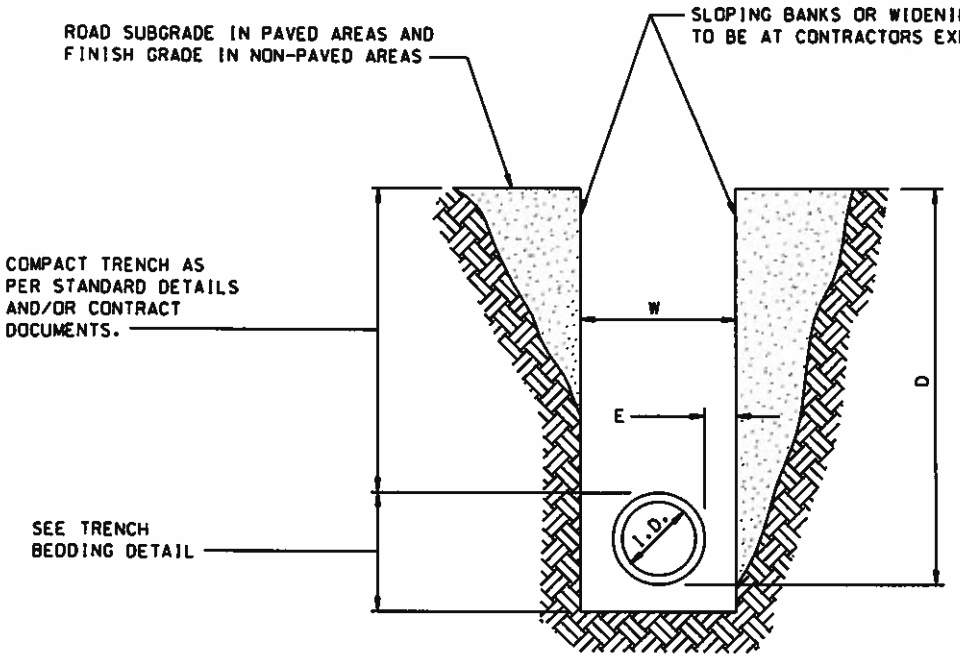

STANDARD TRENCH

PIPE I.D. (IN.)	W (IN.) 0' < D ≤ 5'	W (IN.) 5' < D ≤ 15'	W (IN.) 15' < D	PIPE I.D. (IN.)	W (IN.) 0' < D ≤ 5'	W (IN.) 5' < D ≤ 15'	W (IN.) 15' < D
6	36	60	66	18	40	64	70
8	36	60	66	20	42	66	72
10	36	60	66	24	46	70	76
12	36	60	66	27	56	80	86
15	37	61	67	30	59	83	89
16	38	62	68	36	66	90	96

NOTES:

1. W = PAYMENT WIDTH FOR CONTINGENT ITEMS IN NORMAL TRENCHES.
2. THE ABOVE CHART PERTAINS TO CAST IRON, DUCTILE IRON, AND PVC PIPE. FOR OTHER PIPE MATERIALS THE MAXIMUM TRENCH WIDTH (W) FOR TRENCH DEPTHS UP TO 5'- 0" WILL BE O.D. OF BELL + 2E (36" MIN.)

   • FOR 6" TO 24" PIPE, E = 9" • FOR 42" TO 72" PIPE, E = 15"
   • FOR 27" TO 36" PIPE, E = 12"

   ADD 24" TO THE ABOVE CALCULATED "W" FOR TRENCH DEPTHS GREATER THAN 5'- 0" AND LESS THAN 15'- 0". ADD 30" TO THE ABOVE CALCULATED "W" FOR TRENCH DEPTHS GREATER THAN 15'- 0".
3. TRENCHES TO BE SHEETED OR BRACED AS REQUIRED TO MEET ALL GOVERNING SAFETY CODES. ALL ASSOCIATED COST WILL BE BORNE BY THE CONTRACTOR.
4. ROADWAY PATCH/REPAIR SHALL BE MADE TO THE LIMITS NOTED IN THE HIGHWAY PERMIT, STANDARD DETAILS OR CONTRACT DOCUMENTS AS DIRECTED BY THE COUNTY. THE TRENCH WIDTHS ABOVE SHALL BE USED FOR PAVEMENT PAYMENT PURPOSES.

HARFORD COUNTY, MD
DEPARTMENT OF PUBLIC WORKS
Robert B. Cooper

STANDARD GENERAL DETAILS

TRENCH PAYMENT WIDTHS

ISSUED 7/1/98
REVISED 3/15/09
REVISED

PLATE G-8

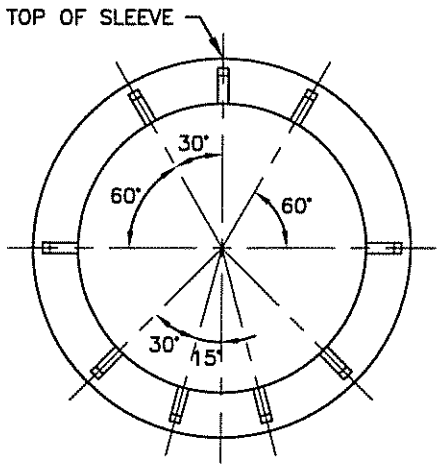

SPACER LOCATION FOR 16" THRU 36" DIA. CARRIER PIPE

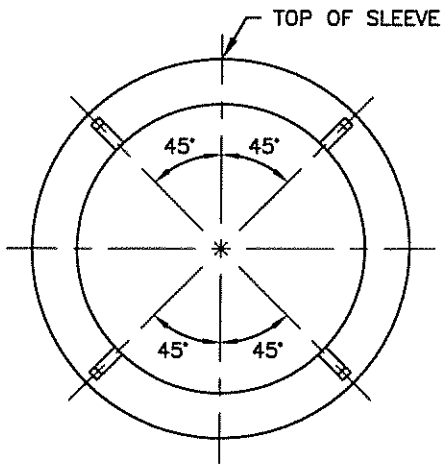

SPACER LOCATION FOR 12" DIA. & LESS CARRIER PIPE

PIPE SIZE	CASING PIPE SIZE (MIN.)
6"	18"
8"	20"
10"	22"
12"	24"
14"	26"
16"	30"
18"	30"
20"	32"
24"	36"
30"	48"

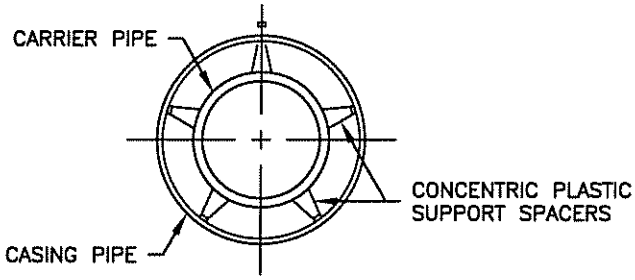

SECTION A–A

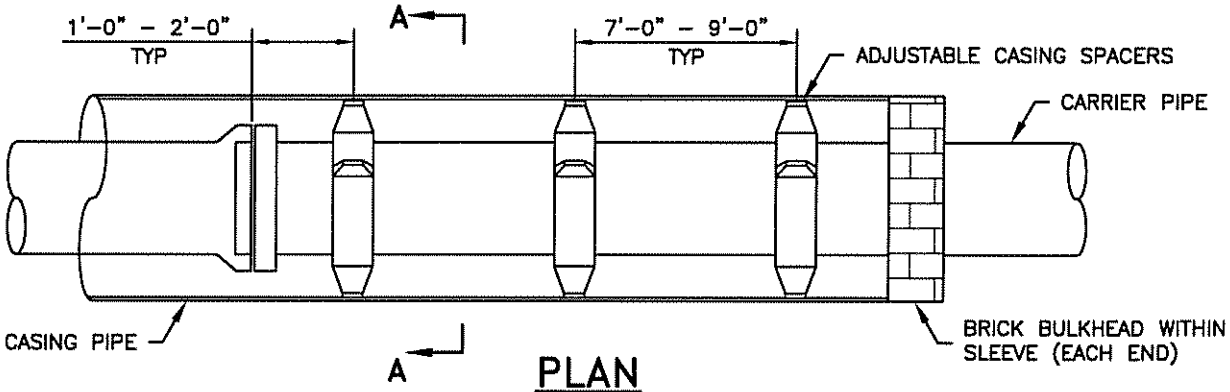

PLAN

NOTES:

1. ALL CARRIER PIPES SHALL BE RESTRAINED JOINT DUCTILE IRON PIPE (CLASS 52 MIN.).
2. CASING SIZE MAY BE INCREASED WITH PRIOR WRITTEN PERMISSION FROM THE DIVISION OF WATER AND SEWER.
3. TIMBER SKIDS WILL BE ALLOWED FOR GRAVITY SEWER.
4. THE EXTERIOR OF THE CASING PIPE SHALL HAVE A FACTORY APPLIED BITUMINOUS COATING. THE FIELD CONNECTION SHALL ALSO BE BITUMINOUS COATED BEFORE INSTALLATION. BITUMINOUS COATING SHALL MEET THE REQUIREMENTS OF AWWA C210.

HARFORD COUNTY, MD
DEPARTMENT OF PUBLIC WORKS

STANDARD GENERAL DETAILS

JACKING OR BORING

ISSUED 07/98
REVISED 11/10/14

PLATE G–9

NOTE:

1. SEE STANDARD DETAIL G-9 FOR ARRANGEMENT OF CONCENTRIC SPACERS.
2. GROUT HOLES STAGGERED - MAXIMUM SPACING 3'-6" O.C.
3. CONTRACTOR SHALL SUBMIT SHOP DRAWINGS SHOWING SPECIFIC MATERIALS AND METHODS.

PIPE I.D.	SLEEVE MIN. O.D.
8-12"	48"
14-16"	48"
20"	48"
24"	54"
30"	60"
36"	66"

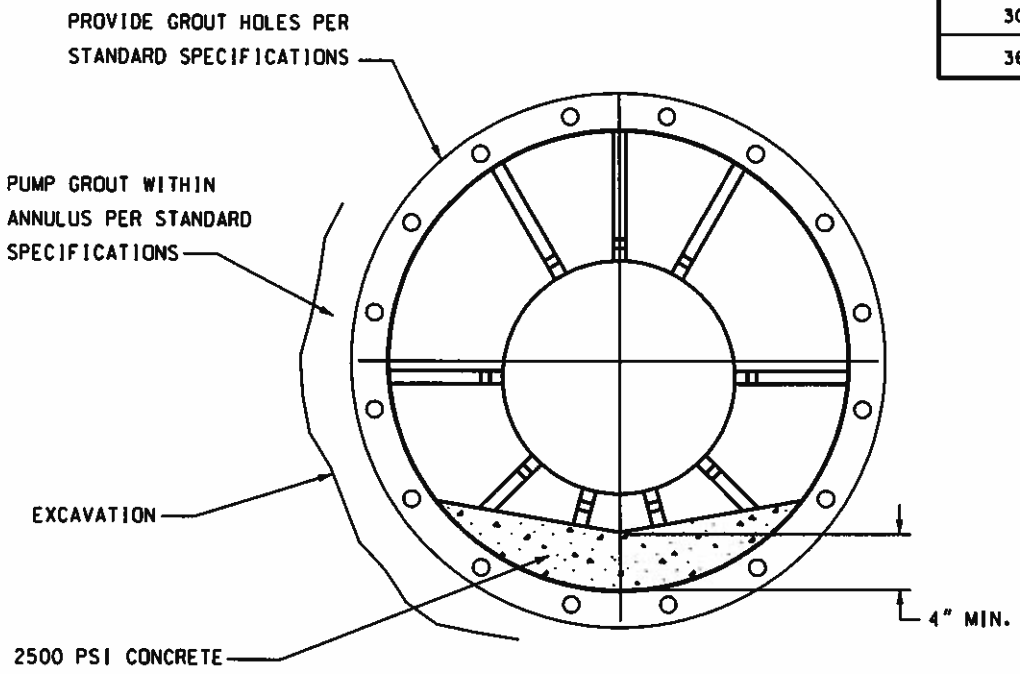

SECTION A-A

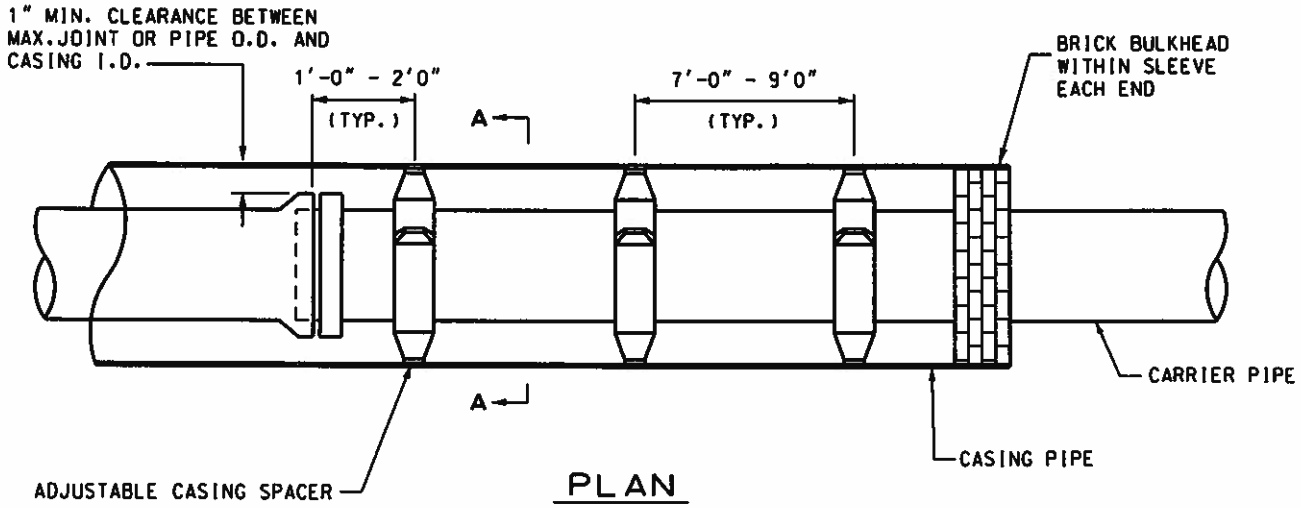

PLAN

HARFORD COUNTY, MD
DEPARTMENT OF PUBLIC WORKS
Robert B. Cooper

STANDARD GENERAL DETAILS

TUNNELING

ISSUED 7/1/98
REVISED 3/15/09
REVISED

PLATE G-10

NOTES:

1. A 1 FOOT DIAMETER HARFORD COUNTY SEAL DECAL WILL BE PROVIDED BY THE COUNTY.
2. SIGN SHALL BE 4' x 6' ON ½" EXTERIOR GRADE PLYWOOD, AND SUPPORTED BY 2" x 4" PRESSURE TREATED POSTS.
3. PROVIDE ROYAL BLUE LETTERING ON A NON-REFLECTIVE WHITE BACKGROUND. THE LETTERING AND LAYOUT SHALL BE COMPUTER GENERATED.
4. LETTERING SHALL BE PROPORTIONAL IN SIZE AND OF THE SAME OR SIMILAR STYLES TO THAT SHOWN.
5. SIGN SHALL BE ERECTED LEVEL AND MAINTAINED DURING THE CONSTRUCTION PERIOD. SIGN SHALL BE REMOVED IN GOOD CONDITION.

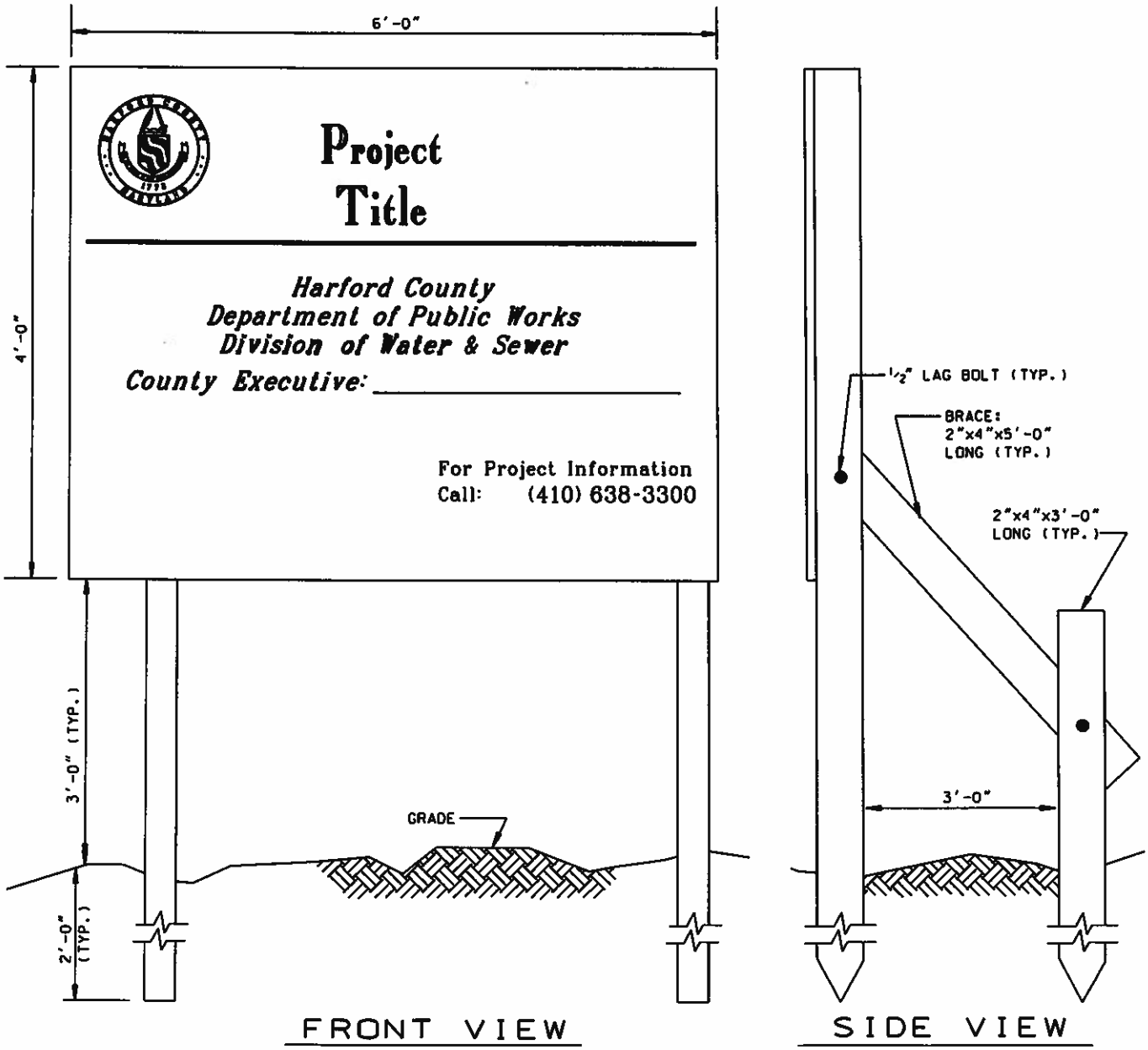

FRONT VIEW

SIDE VIEW

HARFORD COUNTY, MD
DEPARTMENT OF
PUBLIC WORKS

Robert B. Coafer

STANDARD GENERAL DETAILS

PROJECT SIGN

ISSUED 7/98
REVISED 4/17/01
REISSUED 3/15/09

PLATE G-11

PAGE LEFT
INTENTIONALLY
BLANK

HARFORD COUNTY, MD
DEPARTMENT OF
PUBLIC WORKS

STANDARD GENERAL DETAILS

NOT USED

ISSUED 7/1/98
REVISED 11/26/03
REVISED 3/15/09

PLATE G-12

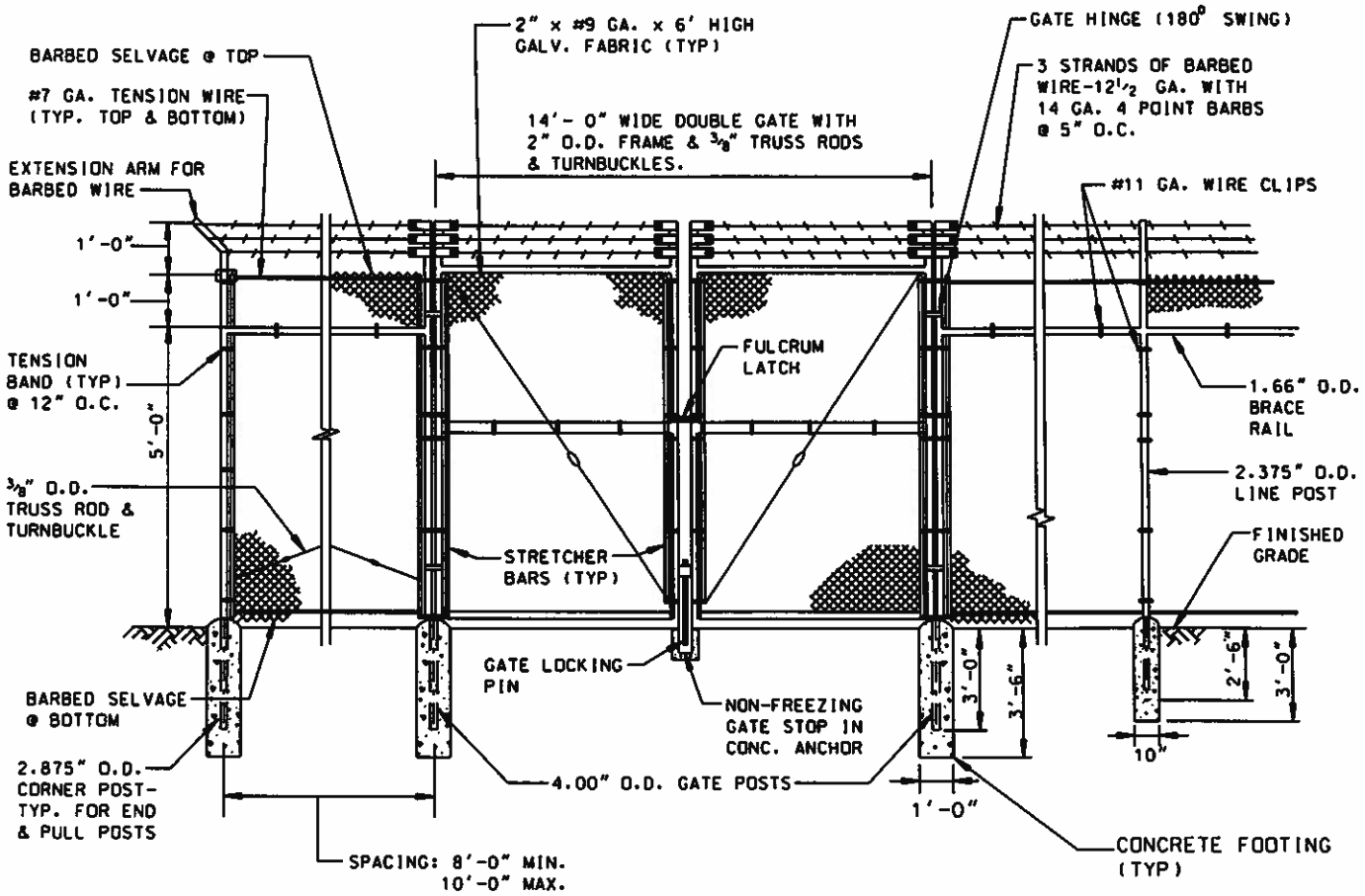

NOTES:

1. TERMINAL OR PULL POSTS SHALL BE INSTALLED AT SHARP BREAKS IN VERTICAL ALIGNMENT & HAVE ⅜ O.D. TRUSS ROD & TURNBUCKLE BRACING.
2. GATE SHALL OPEN INWARD.
3. SEE TECHNICAL SPECIFICATION FOR ADDITIONAL REQUIREMENTS.

HARFORD COUNTY, MD
DEPARTMENT OF
PUBLIC WORKS
Robert B. Cooper

STANDARD GENERAL DETAILS

SECURITY FENCE

ISSUED 7/1/98
REVISED
REISSUED 3/15/09

PLATE G-13

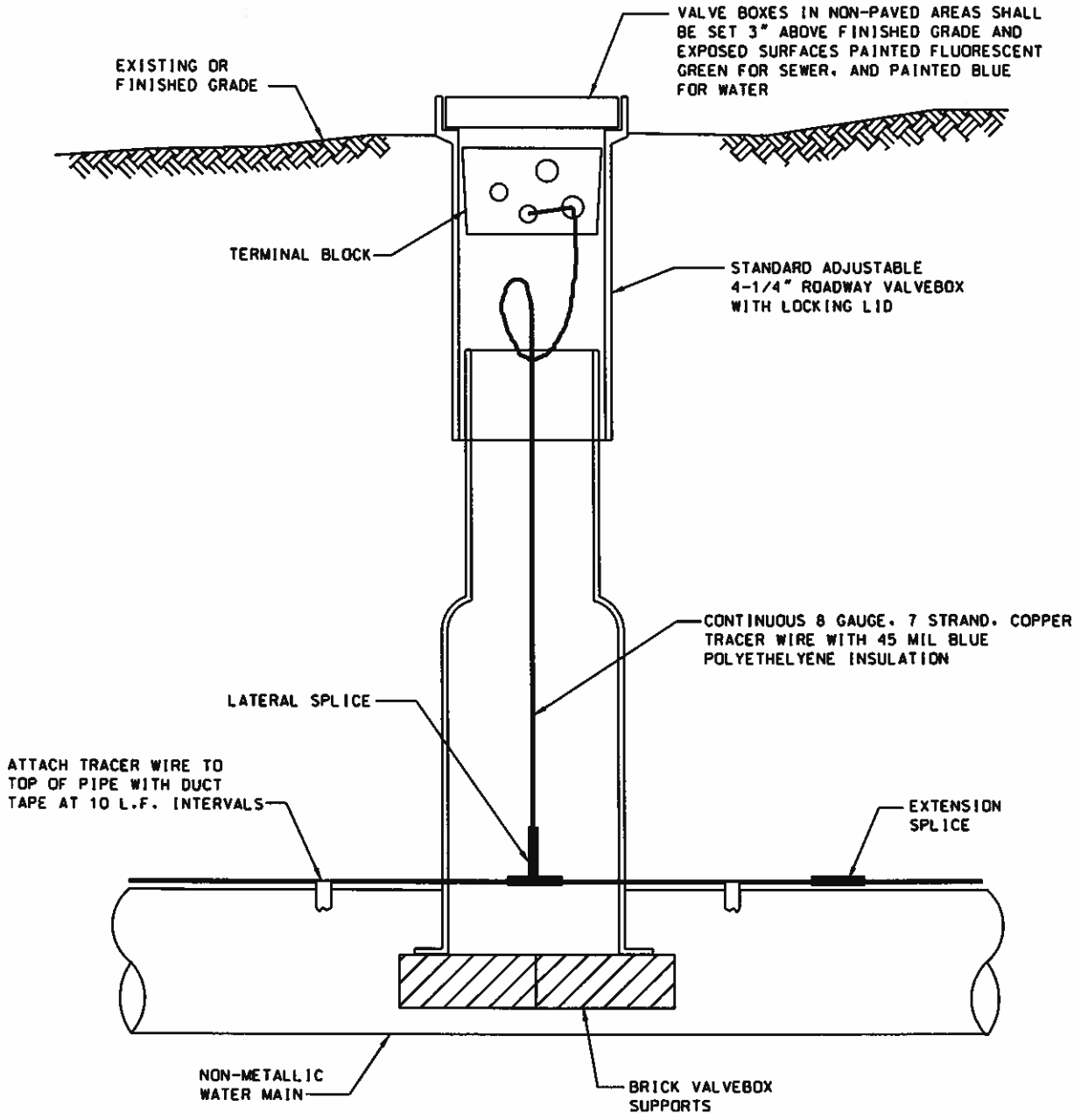

NOTES

1. TRACER WIRE SHALL EXTEND 12 INCHES ABOVE THE TOP OF THE ROADWAY BOX. AFTER THE TOP OF THE ROADWAY BOX IS ADJUSTED FLUSH WITH FINAL GRADE, STRIP THE INSULATION FROM THE LAST $^{3}/_{8}$ OF AN INCH OF TRACER WIRE AND SECURE TO TERMINAL BLOCK.

2. LATERAL SPLICING SHALL BE MADE USING A BRASS COMPRESSION NUT, WATERPROOF BINDER, AND UNDERGROUND ELECTRICAL TAPE. EXTENSION SPLICING SHALL BE MADE USING A CRIMP CONNECTOR AND SHRINK TUBING.

HARFORD COUNTY, MD
DEPARTMENT OF
PUBLIC WORKS
Robert B. Cowgill

STANDARD GENERAL DETAILS

CONTINUITY TEST STATION

ISSUED 4/17/01
REVISED
REISSUED 3/15/09
PLATE G-14

LEGEND

W = O.D. + 2 E

E = 9" FOR 6" TO 24" PIPES

E = 12" FOR 27" TO 36" PIPES

E = 15" FOR 42" TO 72" PIPES

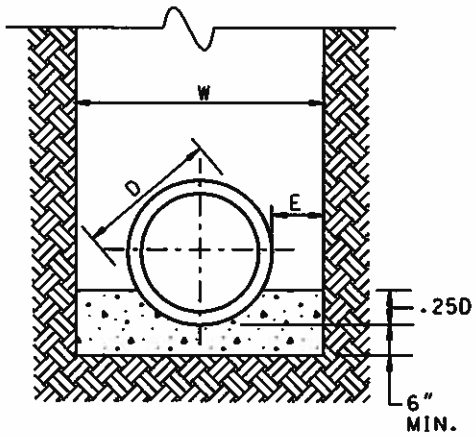

CONCRETE LOW CRADLE

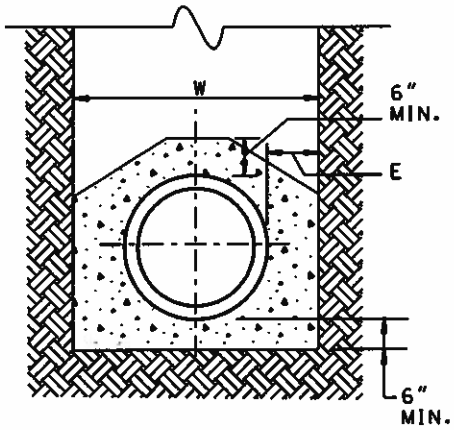

CONCRETE ENCASEMENT

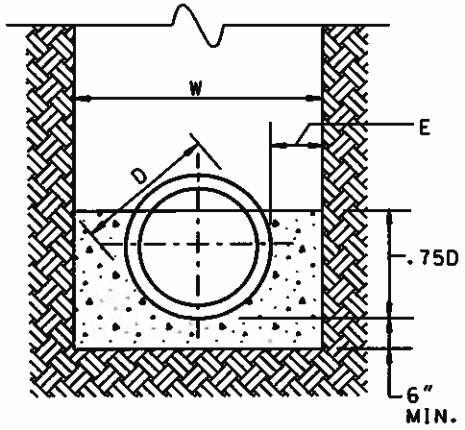

CONCRETE HIGH CRADLE

HARFORD COUNTY, MD
DEPARTMENT OF
PUBLIC WORKS

Robert B Coogan

STANDARD GENERAL DETAILS

CONCRETE ENCASEMENT
AND CRADLES

ISSUED	7/98
REVISED	4/17/01
REISSUED	3/15/09

PLATE G-15

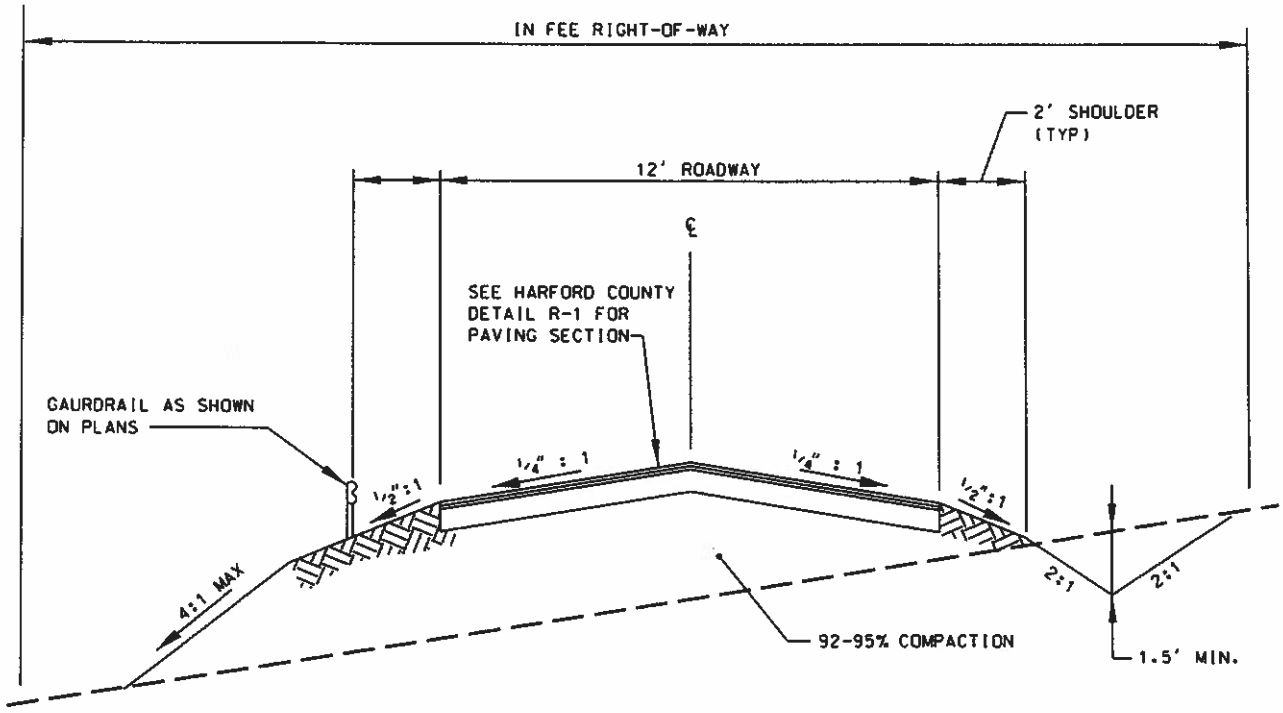

NOTES:

1. CROSS-SLOPE DRIVES ARE ACCEPTABLE.
2. IF GUARDRAILS ARE REQUIRED AS SHOWN ON THE CONSTRUCTION DRAWINGS, GUARDRAIL MATERIALS AND INSTALLATION SHALL BE IN ACCORDANCE WITH THE MARYLAND STATE HIGHWAY ADMINISTRATION STANDARD SPECIFICATIONS

HARFORD COUNTY, MD
DEPARTMENT OF
PUBLIC WORKS
Robert B Cooper

STANDARD GENERAL DETAILS

ACCESS DRIVE

ISSUED 11/26/03
REVISED 3/15/09
REVISED

PLATE G-16

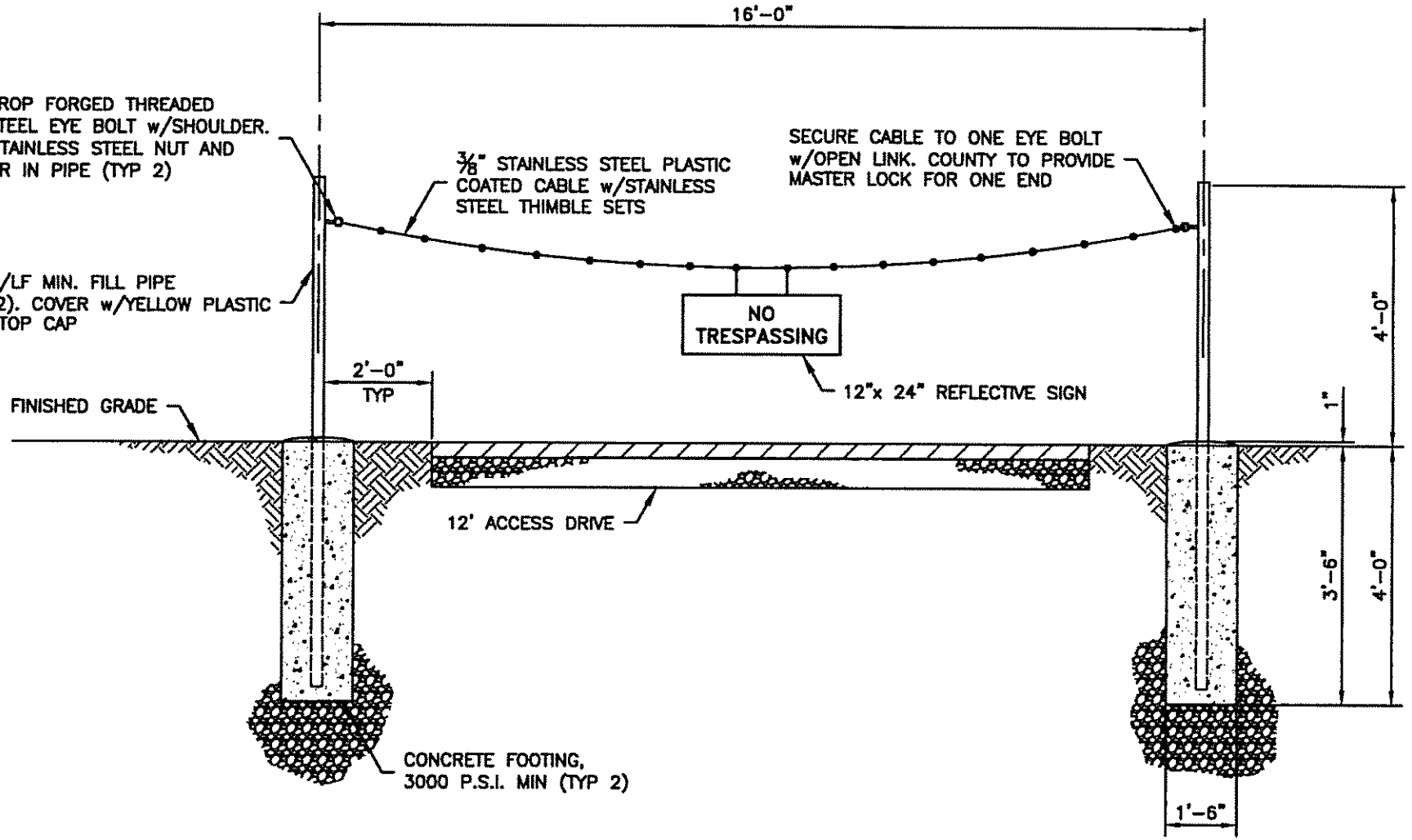

ELEVATION

NO SCALE

HARFORD COUNTY, MD
DEPARTMENT OF PUBLIC WORKS

STANDARD GENERAL DETAILS

ACCESS DRIVE BARRIER

ISSUED 07/98
REVISED 11/10/14

PLATE G-17

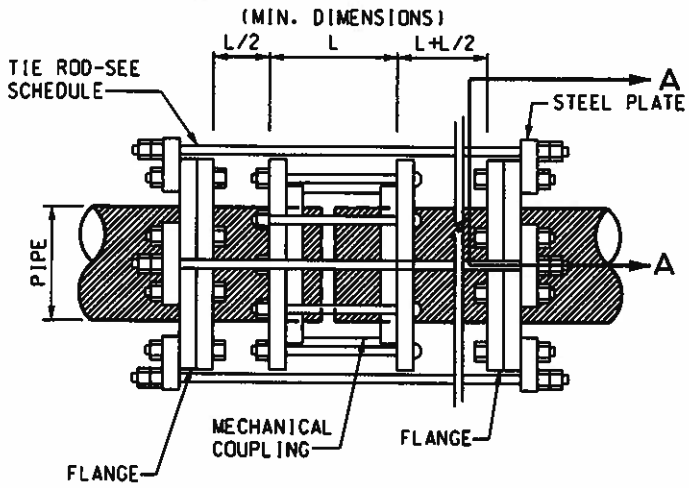

PLAN

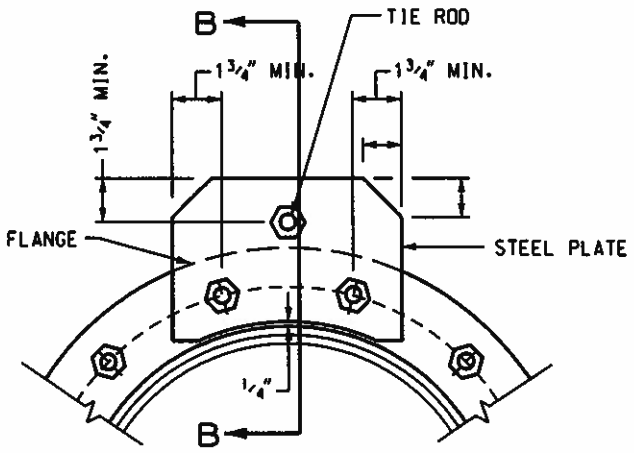

SECTION A-A

STRAPPING HARNESS DETAIL

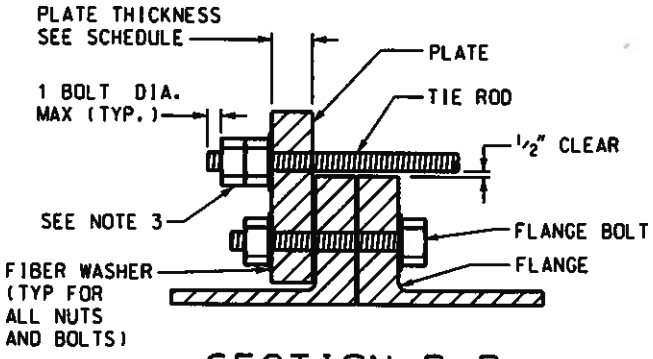

SECTION B-B

PIPE DIAM.	NO. OF RODS	DIAM. OF RODS	PLATE THICKNESS

NOTES:

1. TIE RODS SHALL CONFORM TO ASTM A-588 SPECIFICATION.
2. STEEL PLATE SHALL CONFORM TO ASTM A-36 SPECIFICATION.
3. INSIDE NUT TO BE HAND TIGHT, AND TWO NUTS SHALL BE TIGHTENED AGAINST EACH OTHER.
4. STRAPPING DESIGN SHALL INCLUDE SURGE PRESSURE ADDED TO OPERATING PRESSURE IN P.S.I.
5. FIBER WASHERS SHALL BE INSTALLED BETWEEN FLANGES / STEEL PLATES AND NUTS / BOLT HEADS.
6. WHEN STRAPPING ASSEMBLY IS LOCATED NEAR THE FLANGED VALVE, PROVIDE A FLANGED SPOOL PIECE (1' MIN. LENGTH) BETWEEN THE VALVE AND ASSEMBLY IN ORDER TO AVOID STRAPPING DIRECTLY TO THE VALVE.
7. DESIGN ENGINEER SHALL COMPLETE TABLE AS PART OF THE DESIGN.
8. ALL PIPING AND APPURTENANCES SHALL RECEIVE COATINGS IN ACCORDANCE WITH THE SPECIFICATIONS.

HARFORD COUNTY, MD
DEPARTMENT OF
PUBLIC WORKS

STANDARD GENERAL DETAILS

METHOD OF STRAPPING
FLEXIBLE COUPLINGS
IN VAULTS AND FACILITIES

ISSUED 3/15/09
REVISED
REVISED

PLATE G-18

BUTTRESS DIMENSIONS (SEE NOTE 3)						
	PIPE SIZE (INCHES)					
DIMENSIONS	4	6	8	12	16	14
A						0
B						2
C						2.5
D						5
RE-BAR SIZE						#5

* THIS BLANK TABLE IS TO BE COMPLETED BY A PROFESSIONAL ENGINEER FOR INCLUSION IN THE CONTRACT DOCUMENTS.

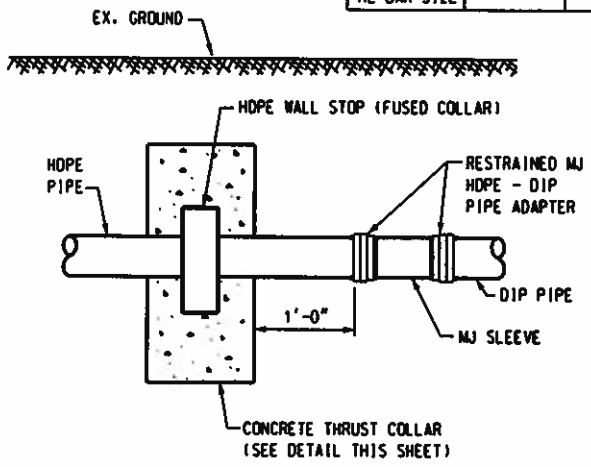

CONNECTION

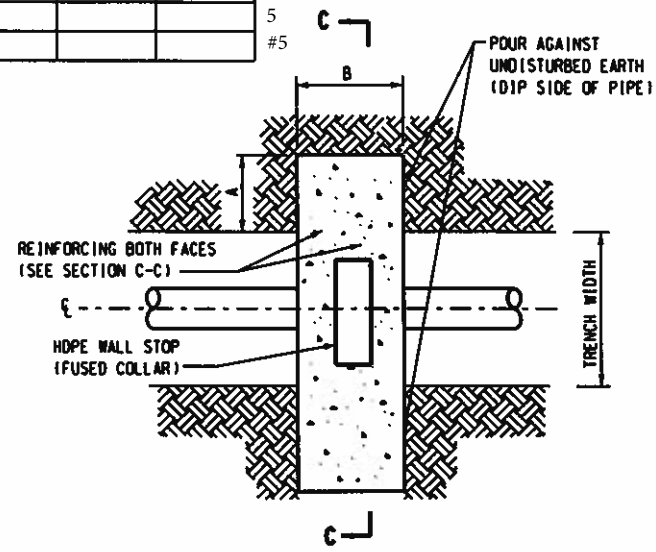

CONCRETE THRUST COLLAR PLAN

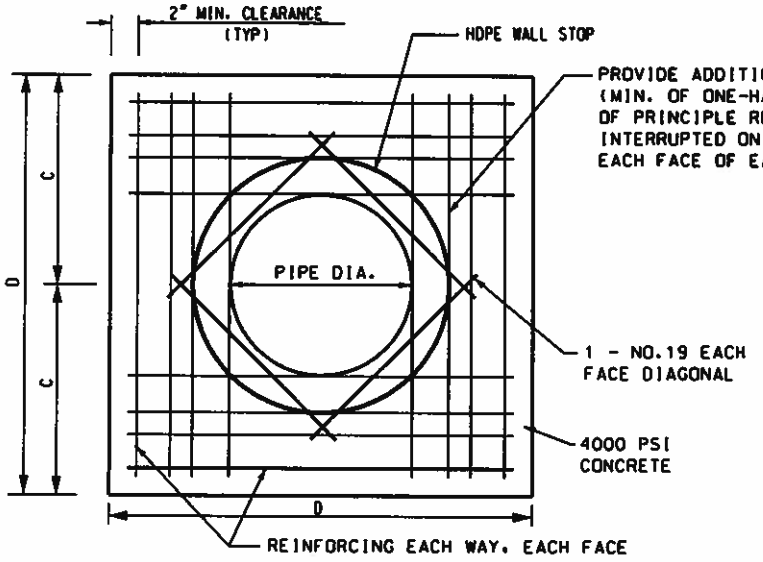

SECTION C-C

CONCRETE THRUST COLLAR

NOTES:

1. PROVIDE 2" MINIMUM CONCRETE COVER OVER ALL REINFORCING.
2. ADEQUATE CURING TIME OR USE OF HIGH EARLY CONCRETE TO OBTAIN THE REQUIRED 4,000 PSI STRENGTH SHALL BE PROVIDED FOR ALL THRUST COLLARS PRIOR TO TESTING FORCE MAIN.
3. ALL CONCRETE THRUST COLLARS MUST BE DESIGNED FOR THE SITE SPECIFIC SOIL,GROUNDWATER AND SYSTEMS PRESSURE CONDITIONS.
4. ALL HARDWARE SHALL BE STAINLESS STEEL.
5. FOR DIRECTIONAL DRILLING, A MINIMUM OF 48 HOURS TIME SHALL BE PROVIDED AFTER DRILL IS COMPLETE PRIOR TOCONSTRUCTING AND INSTALLING THE THRUST COLLARS. TO ALLOW HDPE PIPE TO ADJUST TO GROUND TEMPERATURE.
6. DESIGN ENGINEER SHALL COMPLETE TABLE AS PART OF THE DESIGN.

HARFORD COUNTY, MD
DEPARTMENT OF PUBLIC WORKS
Robert B Coofer

STANDARD GENERAL DETAILS

DIP TO HDPE TRANSITION CONNECTION

ISSUED 3/15/09
REVISED
REVISED

PLATE G-19

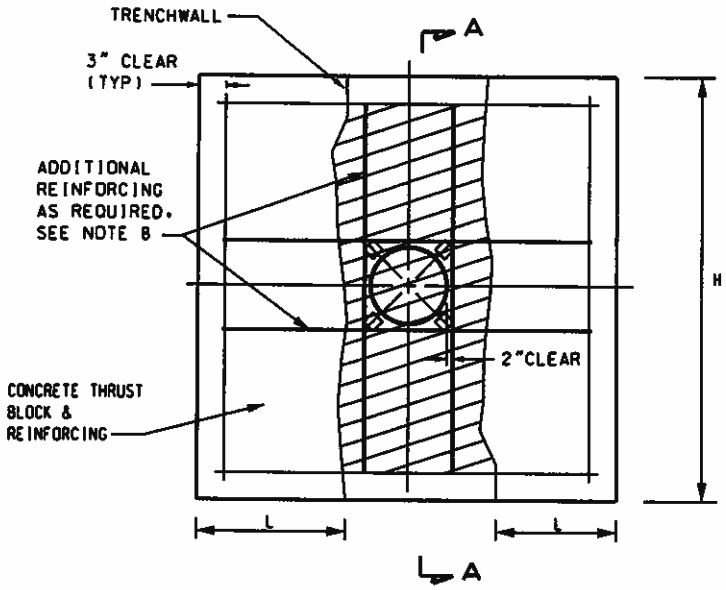

DIMENSIONS (INCHES)	
T	
H	
L	
NO. TIE RODS	
SIZE TIE RODS	
REBAR SPACING	

ENGINEER SHALL PROVIDE THE ABOVE INFORMATION PRIOR TO APPROVAL

ELEVATION

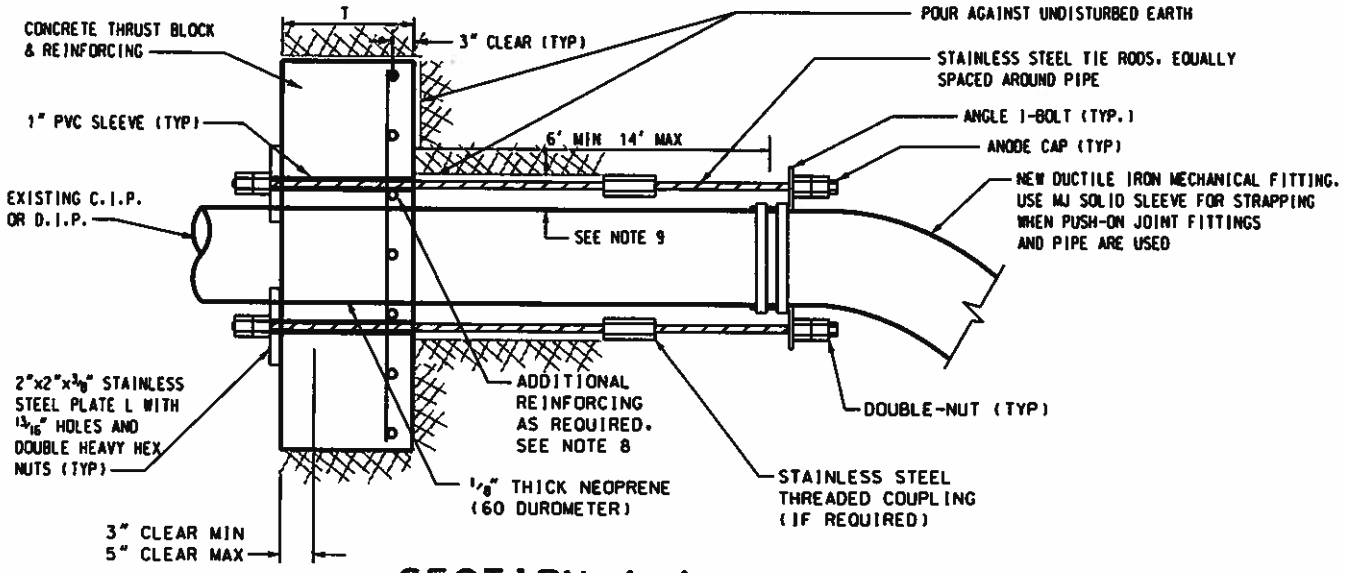

SECTION A-A

NOTES:

1. ALL CONCRETE SHALL BE 4000 PSI. PIPELINE SHALL NOT BE PRESSURIZED UNTIL CONCRETE STRENGTH REACHES 4000 PSI AS CONFIRMED BY THE TESTING OF CONCRETE CYLINDERS.
2. ALL REBAR SHALL BE ASTM A615 GRADE 60.
3. STEEL PLATES SHALL BE STAINLESS STEEL.
4. MAINTAIN 2" CLEAR BETWEEN ALL REBAR AND PIPE.
5. BOLT CIRCLE FOR 3/4" TIE RODS AT THRUST COLLAR SHALL EQUAL BOLT CIRCLE AT TIE BOLTS.
6. ALL TIE RODS SHALL BE PARALLEL TO AXIS OF PIPE.
7. ALL THRUST BLOCKS SHALL BE DESIGNED BASED ON ACTUAL SOIL, GROUNDWATER, AND PIPE DEPTH CONDITIONS.
8. 4 TIE RODS SHOWN ON ELEVATION VIEW FOR CLARITY ONLY (DESIGN IS REQUIRED).
9. MAXIMUM CLEARANCE BETWEEN EDGE OF PIPE AND TRENCH WALL SHALL BE 15".
10. PROVIDE EQUAL TORQUE TO NUTS AND ALL TIE-RODS.
11. DESIGN ENGINEER SHALL COMPLETE TABLE AS PART OF THE DESIGN.

HARFORD COUNTY, MD
DEPARTMENT OF PUBLIC WORKS
Robert B. Cosgrove

STANDARD GENERAL DETAILS

METHOD OF CONNECTING DIP TO EXISTING WATERMAIN REQUIRING A SHUTDOWN

ISSUED 3/15/09
REVISED
REVISED

PLATE G-20

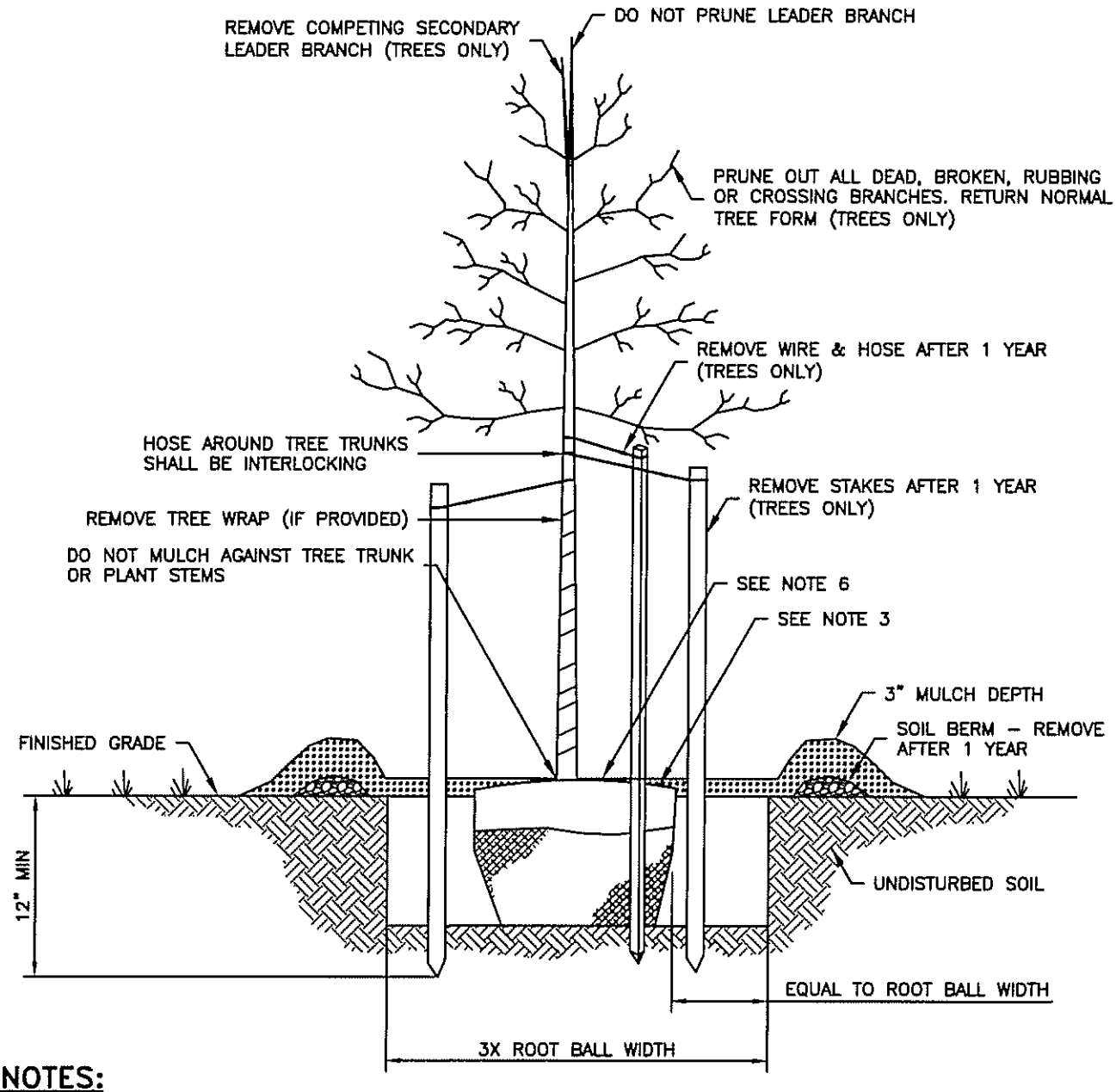

NOTES:

1. FOR PICTORIAL PURPOSES THE DETAIL SHOWN ABOVE DEPICTS A TREE PLANTING. HOWEVER, THE NOTES SHOWN BELOW AND ON THE DETAIL, REFERENCE SPECIFIC DIFFERENCES WITH SHRUB PLANTING.
2. FLOOD PLANTS TWICE DURING THE FIRST 24 HOURS AFTER PLANTING.
3. TOP OF ROOT BALLS OF TREES SHALL BE FLUSH WITH FINISHED GRADE. TOP OF ROOT BALLS OF SHRUBS SHALL EXTEND 1/8 OF THE ROOT BALL HEIGHT ABOVE FINISHED GRADE.
4. MULCH SHALL NOT BE PLACED DIRECTLY AGAINST TREE TRUNKS OR PLANT STEMS.
5. SOIL BERMS AND SUPPORT SYSTEMS SHALL BE FULLY REMOVED ONE YEAR FROM THE PLANTING DATE.
6. PLANTS IN POTTED CONTAINERS SHALL BE REMOVED FROM THE POTS. BALLED AND BURLAPPED PLANTS SHALL HAVE THE WIRE OR STRING CUT AND BURLAP FOLDED DOWN OR CUTOFF TO HALF THE HEIGHT OF THE ROOT BALL.
7. TREES OR SHRUBS SHALL NOT BE PLANTED WITHIN 15 FEET OF WATER OR SEWER UTILITIES IN RIGHTS-OF-WAY OR DRAINAGE AND UTILITY EASEMENTS.

HARFORD COUNTY, MD
DEPARTMENT OF PUBLIC WORKS

STANDARD GENERAL DETAILS

TREE AND SHRUB PLANTING DETAIL

ISSUED 07/98
REVISED 11/10/14

PLATE G-21

STANDARD WATER DETAILS
TABLE OF CONTENTS

	DESCRIPTION	ISSUED
W1	- Pipe Bedding	11/10/14
W2	- Continuity Test Station at Fire Hydrant	4/17/01
W3	- Typical Fire Hydrant Settings (Mountable Curb)	11/10/14
W3a	- Typical Fire Hydrant Settings (Combination Curb and Gutter)	11/10/14
W4	- Strapping Fire Hydrant and Valve to Main	3/15/09
W5	- Fire Hydrant Well	7/1/98
W6	- Buttress for Tees	1/15/10
W7	- Buttress for Horizontal 1/4 Bends	3/15/09
W8	- Buttress and Anchorages for Vertical Bends	11/10/14
W9	- Water Main Valve w/Roadway Box	11/10/14
W10	- Buttress for Caps and Horizontal Bends	11/10/14
W11	- Anchorages for Valves with PVC Pipe	11/10/14
W12	- Water Main Valve Key Extension	7/1/98
W13	- Cap and Blow-Off for 4" Mains and Larger	3/15/09
W14	- Standard Water Meter Frame and Cover	11/10/14
W15	- Standard Frames and Covers	7/1/98
W16	- Standard Service Connection with Curb Box	11/10/14
W17	- Twin Service Connection with Curb Box	11/10/14
W18	- Outside Setting 3/4" Supply with 5/8" Meter (Domestic Service without Sprinkler Service)	11/10/14
W19	- Outside Setting 1" Supply with 3/4" Meter (Domestic Service with Sprinkler Service)	11/10/14
W20	- Outside Setting 1" Supply with Twin 5/8" Meter (Domestic Service without Sprinkler Service)	11/10/14

STANDARD WATER DETAILS
TABLE OF CONTENTS *(Continued)*

DESCRIPTION	ISSUED
W21 - Outside Setting 1-1/2" Supply with Twin 3/4" Meter (Domestic Service with Sprinkler Service)	11/10/14
W22 - Outside Setting 1-1/2" Supply with 1" Meter	11/10/14
W23 - Outside Setting 1-1/2" and 2" Metered Service	11/10/14
W24A- Open System Domestic Water Service with Fire Supply	11/10/14
W24B- Closed System Domestic Water Service with Fire Supply	11/10/14
W25 - Standard Installation for 3" - 10" Combined Fire and Domestic Service	11/10/140
W26 - "Conceptual" Reverse Flow Meter	11/10/14
W27 - Inside Setting Combined Domestic and Sprinkler Service (Single Family and Townhouse Units)	11/26/03
W28 - Inside Setting Domestic Service (Single Family without Sprinkler)	11/10/14
W29 - Air Release Valve or Combination Air Valve and Vault for 20"Pipe and Smaller	11/10/14
W30 - Mechanical Joint Solid Sleeve and Spacer	7/1/98
W31 - Transmission Line Dewatering/Blowoff	3/15/09
W32 - Method of Blocking Plugs which will be Tapped	7/1/98
W33 - Concrete Encasement and Cradles	7/1/98
W34 - Water Main Crossing Strom Drain	7/1/98
W35 - Water Valve Location in Intersections	3/15/09
W36 - 5-1/4" Valve Box	11/10/14
W37 - 4-1/4" Valve Box	11/10/14
W38 - Sewage Pumping Station Water Meter w/Backflow Preventer	11/10/14

NOTE: TRENCH TO BE COMPACTED
AS PER SPECIFICATIONS.

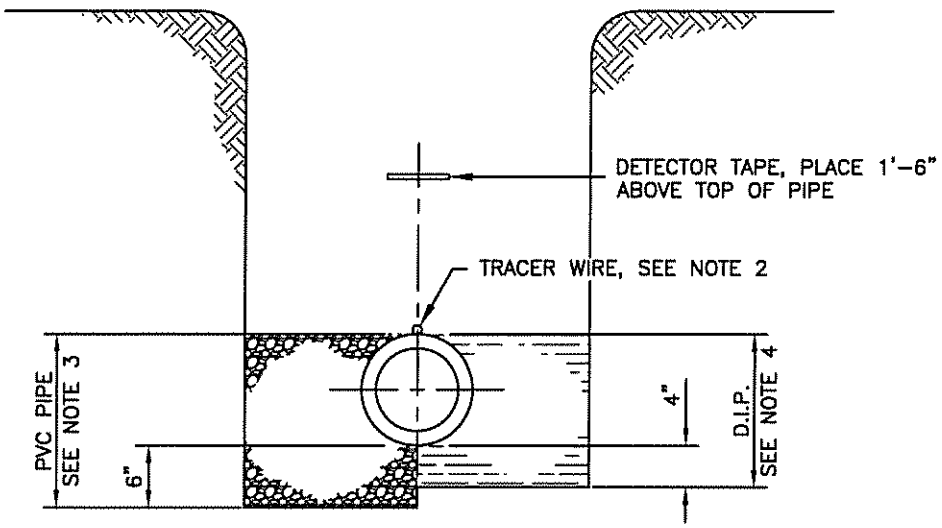

SECTION

NOTES:

1. UNLESS NOTED OTHERWISE, ALL ROAD REPAIR SHALL BE DONE IN ACCORDANCE WITH THE LATEST REVISION OF THE HARFORD COUNTY OR MARYLAND STATE ROAD CODE.
2. PROVIDE TRACER WIRE FOR ALL NON-METALLIC WATER MAINS, SEWER FORCE MAINS AND SERVICES, SEE DETAILS W-2, W-13 AND W-14.
3. PVC PIPE SHALL BE BACKFILLED WITH AASHTO M43, No. 57 AGGREGATE TO TOP OF PIPE.
4. DUCTILE IRON PIPE SHALL BE BEDDED IN LOOSE SOIL (4" MIN) AND HAVE APPROVED COMPACTED BACKFILL MATERIAL CONSOLIDATED TO TOP OF PIPE.
5. ALL PIPE SHALL BE INSTALLED IN ACCORDANCE WITH THE RECOMMENDATIONS OF THE PIPE MANUFACTURER AND COUNTY APPROVAL.
6. PROVIDE CONTINUOUS BEARING FOR FULL LENGTH OF PIPE.

HARFORD COUNTY, MD DEPARTMENT OF PUBLIC WORKS	STANDARD WATER DETAILS	ISSUED 07/98 REVISED 11/10/14
	PIPE BEDDING	PLATE W-1

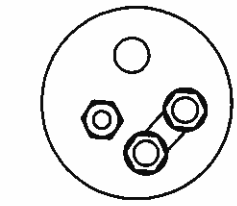

TERMINAL BLOCK

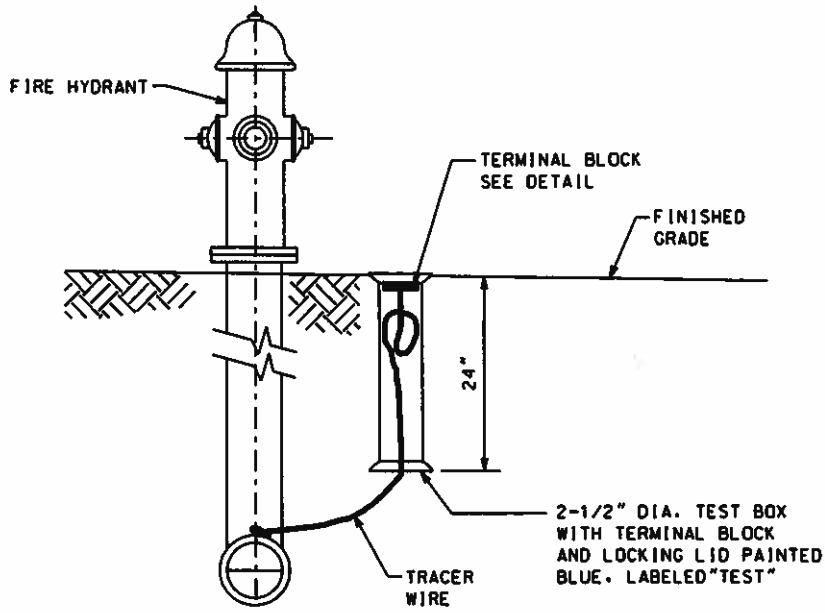

SECTION A–A

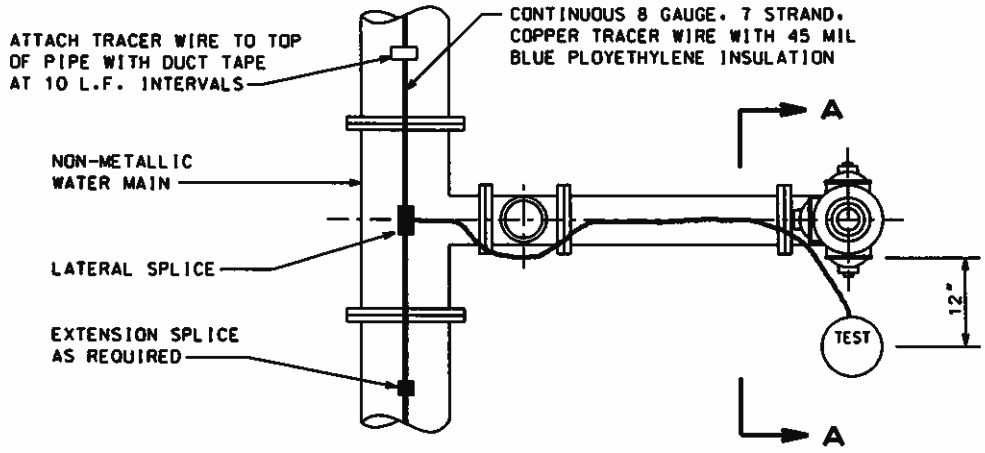

PLAN

NOTES:

1. THE TRACER WIRE SHALL EXTEND 12 INCHES ABOVE THE TOP OF THE TEST BOX. AFTER THE TEST BOX IS ADJUSTED FLUSH WITH FINAL GRADE, STRIP THE INSULATION FROM THE LAST $^{3}/_{8}$" OF TRACER WIRE AND SECURE TO TERMINAL BLOCK.
2. LATERAL SPLICING SHALL BE MADE USING A BRASS COMPRESSION NUT, A WATER PROOF BINDER AND UNDERGROUND ELECTRICAL TAPE. EXTENSION SPLICING SHALL BE MADE USING A CRIMP CONNECTOR AND SHRINK TUBING.
3. BUTTRESSES AND STRAPPING NOT SHOWN FOR CLARITY.
4. TEST STATION MUST BE PLACED TO THE RIGHT OR LEFT SIDE OF THE FIRE HYDRANT.

HARFORD COUNTY, MD
DEPARTMENT OF PUBLIC WORKS

STANDARD WATER DETAILS

CONTINUITY TEST STATION AT FIRE HYDRANT

ISSUED	7/98
REVISED	4/17/01
REISSUED	3/15/09
PLATE	W-2

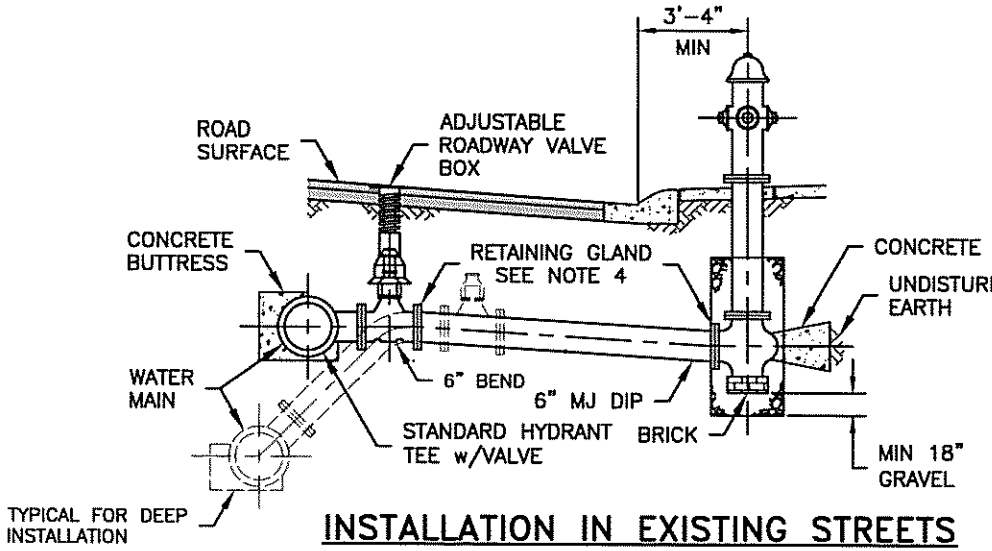

INSTALLATION IN EXISTING STREETS w/SIDEWALK ADJACENT TO CURB

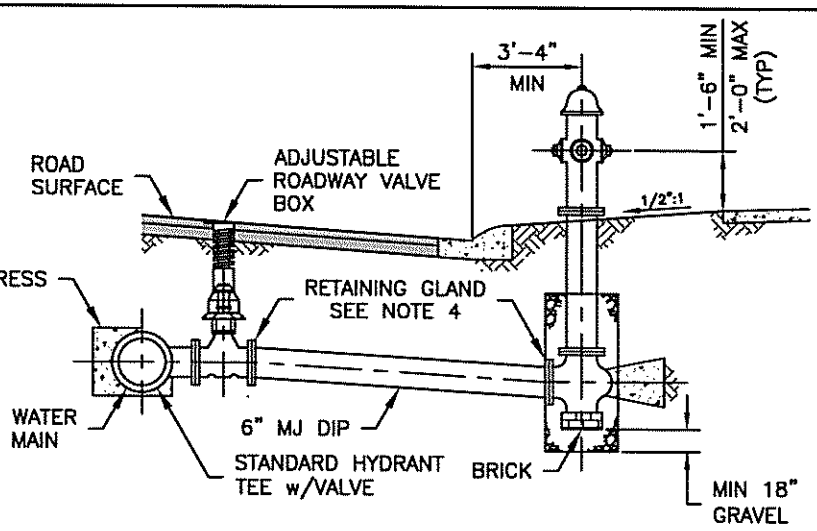

INSTALLATION IN NEW DEVELOPMENT WITH CURB AND GUTTER

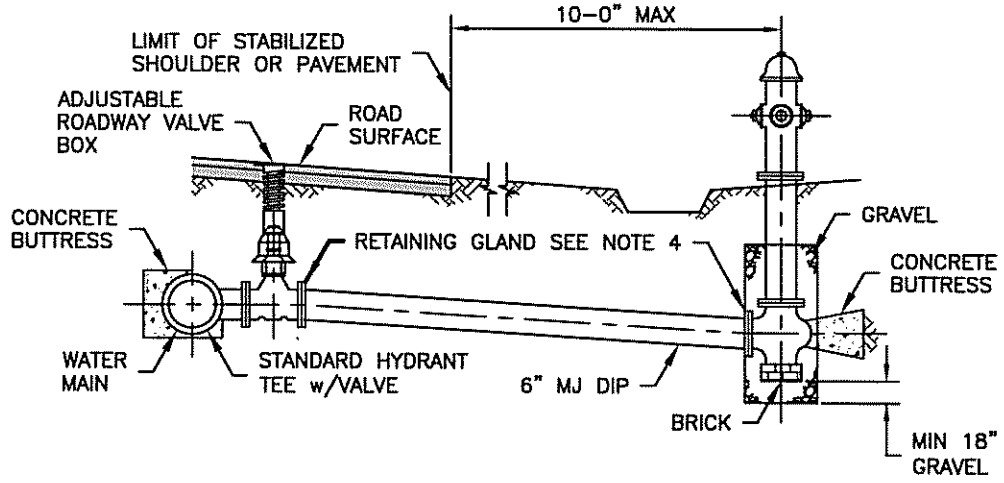

INSTALLATION IN STREETS WITHOUT CURB AND GUTTER

NOTES:

1. FOR PRESSURES ABOVE 200 PSI A SPECIAL DESIGN SHALL BE SUBMITTED AND APPROVED.
2. AFTER ASSEMBLY, PAINT ALL EXPOSED UNDERGROUND STEEL WITH AN APPROVED BITUMINOUS COATING.
3. MECHANICAL JOINT RESTRAINT REQUIRED ON ALL JOINTS FROM MAIN TO HYDRANT.
4. PROVIDE 3'-6" (MIN) COVER OVER WATER MAIN AND FIRE HYDRANT LEAD.
5. LARGEST OUTLET SHALL FACE PAVED AREA.
6. WHEN DETERMINING BURY ELEVATION, HYDRANT HEIGHT SHALL ACCOMMODATE THE RISE OF GRADE 1/2 INCH PER FOOT FROM BACK OF CURB.
7. THE FIRE HYDRANT FLANGE SHALL NOT BE BURIED AND SHALL BE NO MORE THE 6 INCHES ABOVE FINISHED GRADE.

HARFORD COUNTY, MD
DEPARTMENT OF PUBLIC WORKS

STANDARD WATER DETAILS

TYPICAL FIRE HYDRANT SETTINGS
(MOUNTABLE CURB)

ISSUED 07/98
REVISED 11/10/14

PLATE W-3

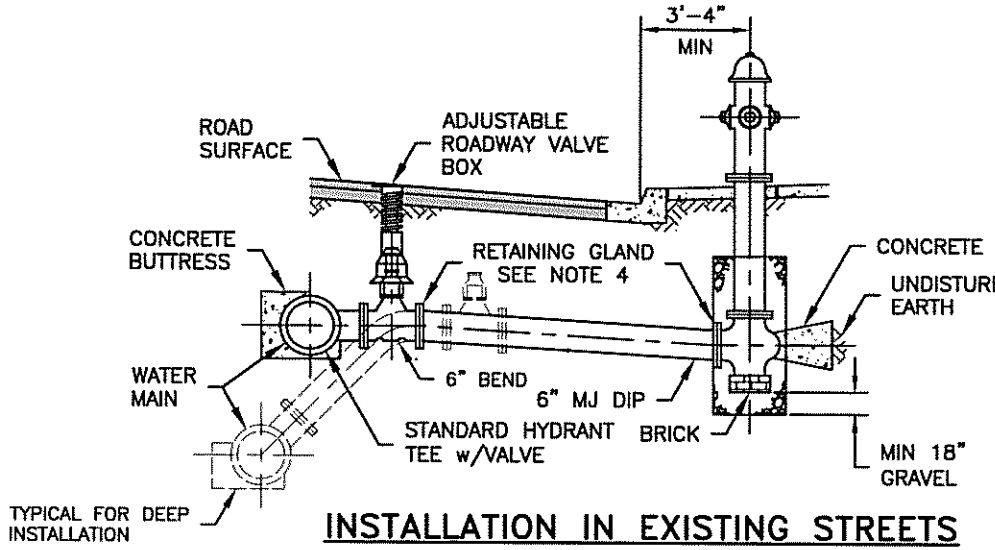

INSTALLATION IN EXISTING STREETS w/SIDEWALK ADJACENT TO CURB

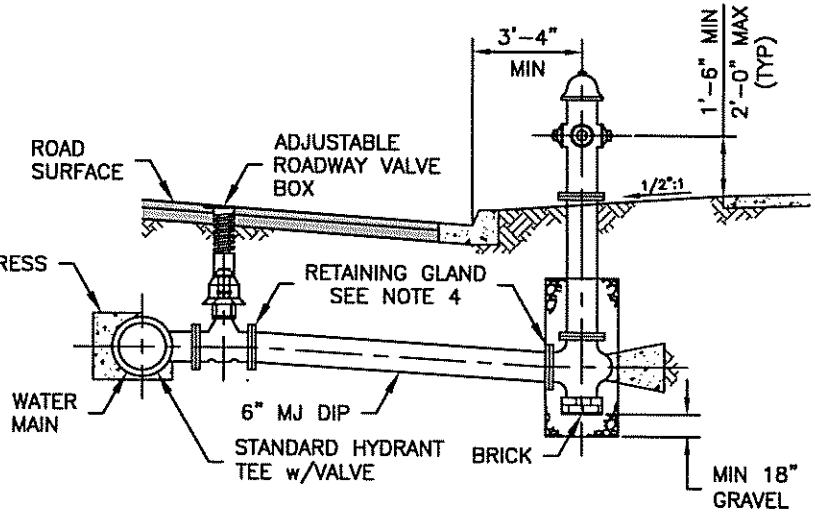

INSTALLATION IN NEW DEVELOPMENT WITH CURB AND GUTTER

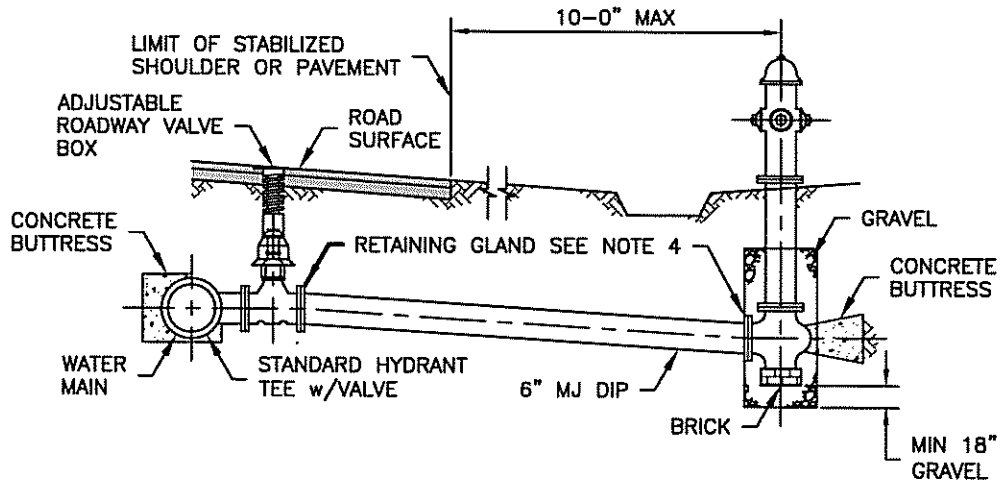

INSTALLATION IN STREETS WITHOUT CURB AND GUTTER

NOTES:

1. FOR PRESSURES ABOVE 200 PSI A SPECIAL DESIGN SHALL BE SUBMITTED AND APPROVED.
2. AFTER ASSEMBLY, PAINT ALL EXPOSED UNDERGROUND STEEL WITH AN APPROVED BITUMINOUS COATING.
3. MECHANICAL JOINT RESTRAINT REQUIRED ON ALL JOINTS FROM MAIN TO HYDRANT.
4. PROVIDE 3'-6" (MIN) COVER OVER WATER MAIN AND FIRE HYDRANT LEAD.
5. LARGEST OUTLET SHALL FACE PAVED AREA.
6. WHEN DETERMINING BURY ELEVATION, HYDRANT HEIGHT SHALL ACCOMMODATE THE RISE OF GRADE 1/2 INCH PER FOOT FROM BACK OF CURB.
7. THE FIRE HYDRANT FLANGE SHALL NOT BE BURIED AND SHALL BE NO MORE THE 6 INCHES ABOVE FINISHED GRADE.

HARFORD COUNTY, MD
DEPARTMENT OF PUBLIC WORKS

STANDARD WATER DETAILS

TYPICAL FIRE HYDRANT SETTINGS
(COMBINATION CURB AND GUTTER)

ISSUED 07/98
REVISED 11/10/14

PLATE W-3a

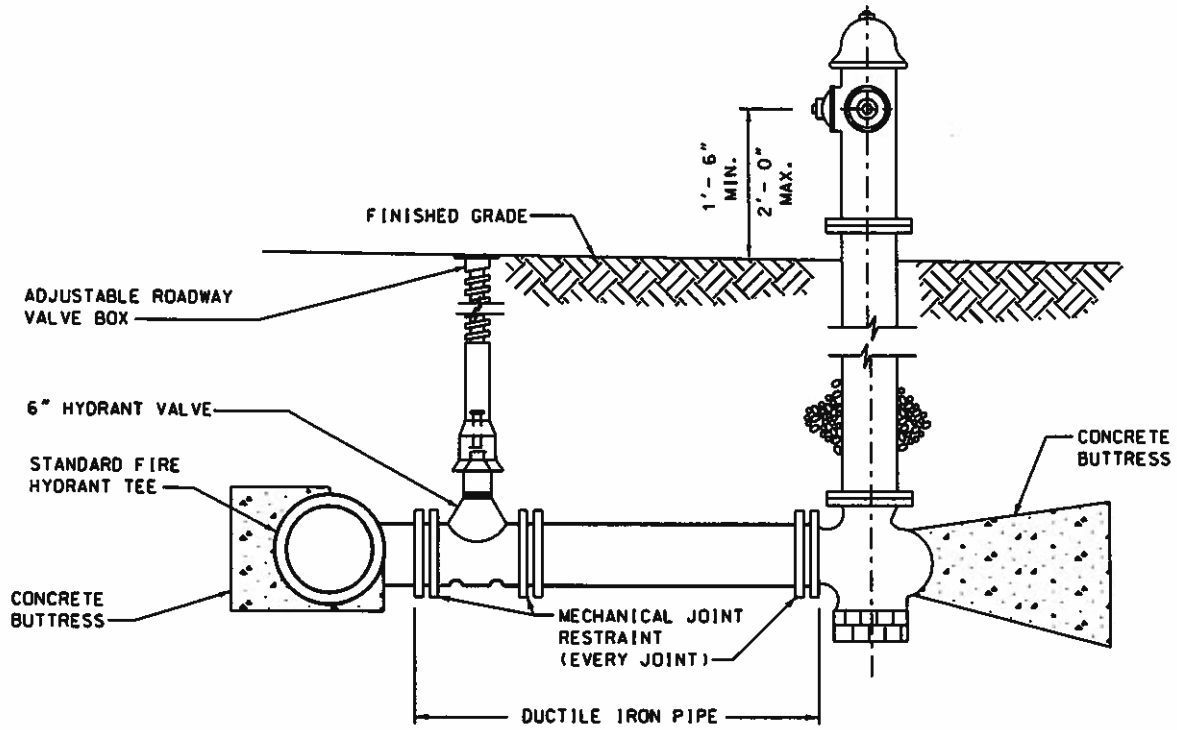

ELEVATION

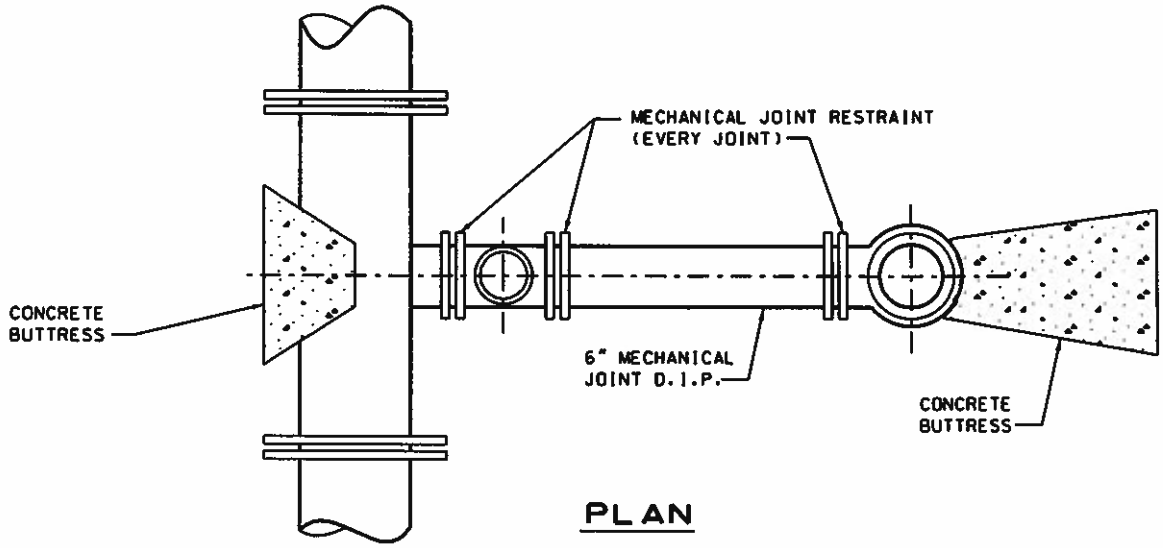

PLAN

NOTES:

1. FOR PRESSURES ABOVE 200 PSI A SPECIAL DESIGN SHALL BE SUBMITTED AND APPROVED.
2. PROVIDE 3'- 6" (MIN.) COVER OVER WATER MAIN AND FIRE HYDRANT LEAD.
3. SEE STANDARD DETAIL W-3 FOR TYPICAL SETTINGS.

HARFORD COUNTY, MD
DEPARTMENT OF PUBLIC WORKS
Robert B. Cowan

STANDARD WATER DETAILS

RESTRAINING FIRE HYDRANT TO MAIN

ISSUED 7/1/98
REVISED 4/17/01
REISSUED 3/15/09

PLATE W-4

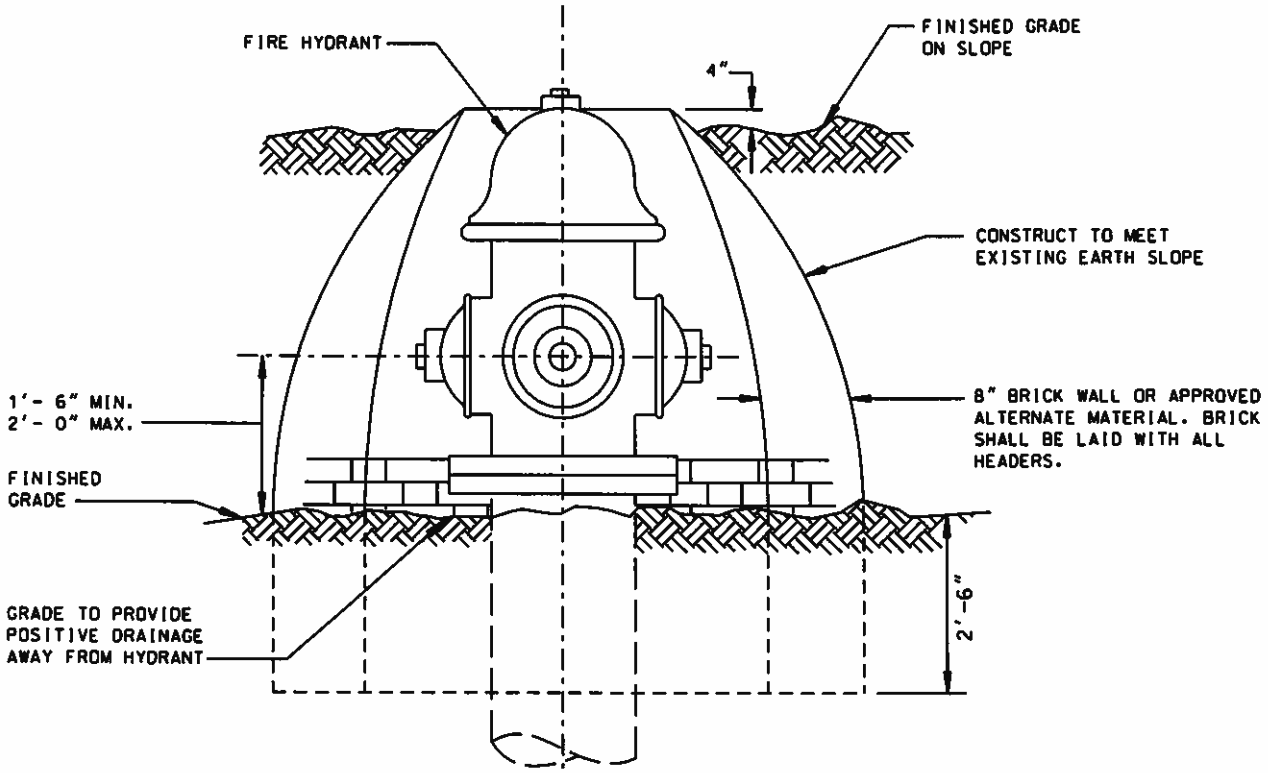

ELEVATION

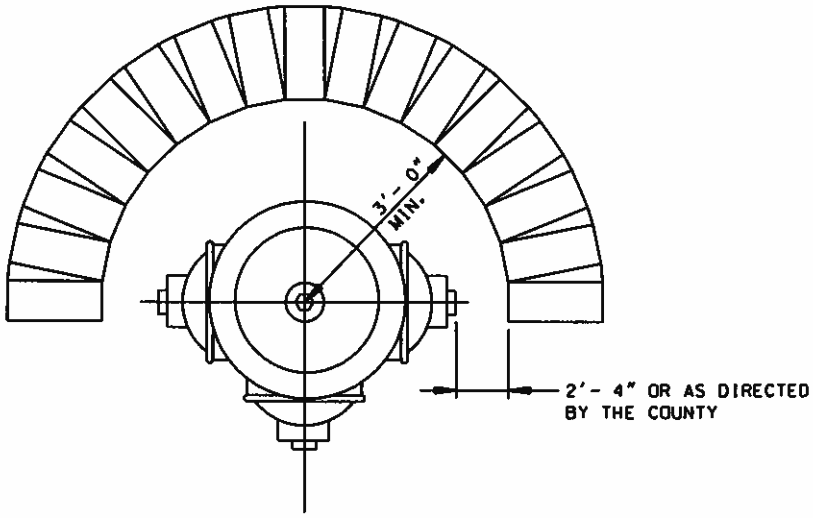

PLAN

NOTE:

THIS DETAIL SHALL BE USED WHEN THE FINISHED GRADE EXCEEDS A 2:1 SLOPE AT THE FIRE HYDRANT CENTERLINE.

HARFORD COUNTY, MD
DEPARTMENT OF PUBLIC WORKS

STANDARD WATER DETAILS

FIRE HYDRANT WELL

ISSUED 7/1/98
REVISED
REISSUED 3/15/09
PLATE W-5

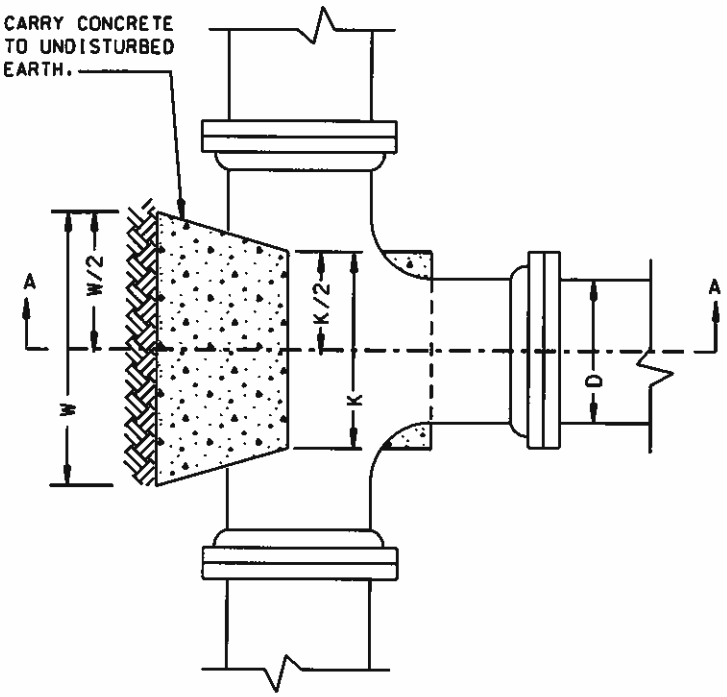

PLAN

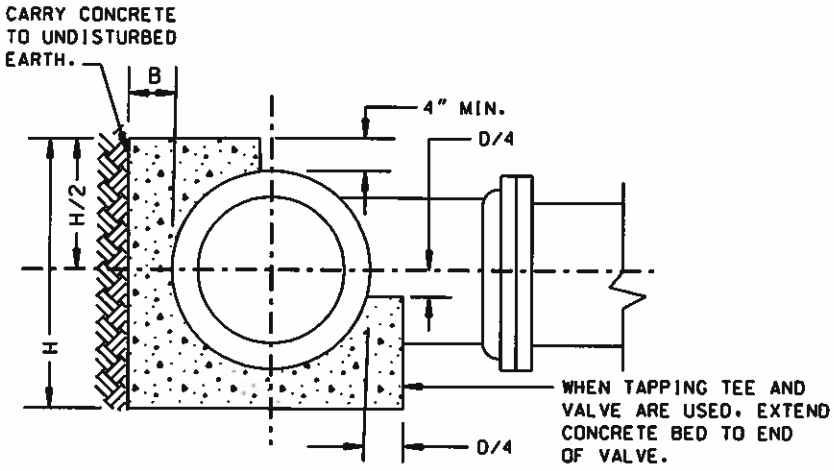

SECTION A-A

NOTES:

1. ALL CONCRETE TO BE MIX NO. 2.
2. BUTTRESS DIMENSIONS SHOWN ARE BASED UPON SOIL BEARING PRESSURE OF 3000 PSF AND STATIC WATER PRESSURE OF 200 PSI. WHERE WATER MAIN PRESSURE EXCEEDS 200 PSI OR WHERE SOIL BEARING PRESSURE IS LESS THAN 3000 PSF SPECIAL BUTTRESS DESIGN IS REQUIRED.
3. MINOR VARIATIONS IN BUTTRESS SHAPE WILL BE PERMITTED. PROVIDED THE MINIMUM BEARING AREA AGAINST SOLID GROUND IS MAINTAINED.
4. A SPECIAL DESIGN WILL BE REQUIRED FOR PIPELINES GREATER THAN 16-INCH IN DIAMETER.

BUTTRESS DIMENSIONS FOR TEES (INCHES)				
	SIZE OF BRANCH (D)			
D	6	8	12	16
B	8	9	12	12
H	19	25	38	50
W	15	20	30.5	40
K	12	16	16	20

HARFORD COUNTY, MD
DEPARTMENT OF
PUBLIC WORKS
Robert B. Cooper

STANDARD WATER DETAILS

BUTTRESS FOR TEES

ISSUED 7/1/98
REVISED 3/15/09
REVISED 4/16/10

PLATE W-6

BUTTRESS DIMENSIONS (INCHES)

PIPE DIAMETER	W	H	R	S	DISTANCE FROM BEND THAT ALL JOINTS SHALL BE RESTRAINED. FT.
6	26	21	20	10	40
8	33	27	20	12	50
12	48	39	20	14	72
16	64	51	20	20	92

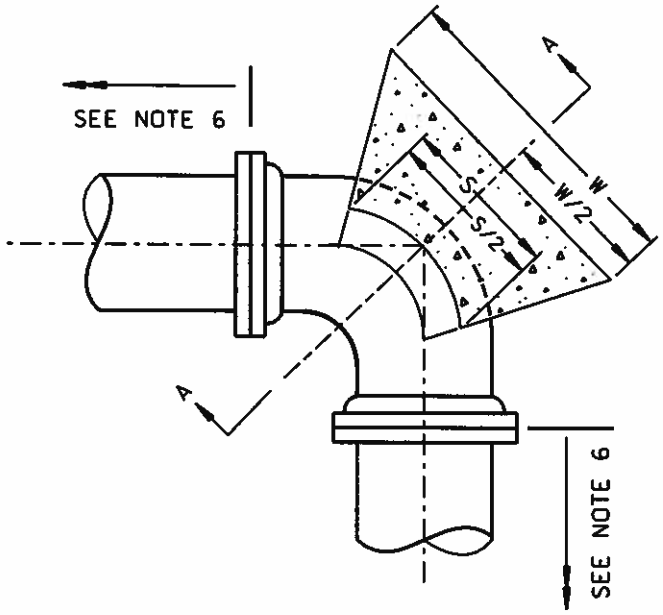

PLAN

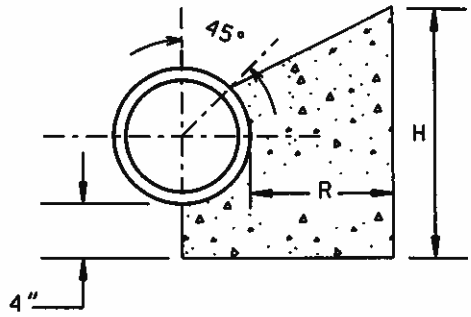

SECTION A-A

MINOR VARIATIONS IN BUTTRESS SHAPE WILL BE PERMITTED PROVIDED THE MINIMUM BEARING AGAINST UNDISTURBED EARTH IS MAINTAINED.

NOTES:

1. CARRY ALL BEARING SURFACES TO UNDISTURBED EARTH.
2. THIS DETAIL TO BE USED FOR HORIZONTAL 1/4 BENDS ONLY.
3. ALL CONCRETE TO BE MIX NO. 2.
4. BUTTRESS DIMENSIONS SHOWN ARE BASED UPON SOIL BEARING PRESSURE OF 3000 PSF AND STATIC WATER PRESSURE OF 200 PSI WHERE MAIN PRESSURE EXCEEDS 200 PSI OR WHERE SOIL BEARING PRESSURE IS LESS THAN 3000 PSF SPECIAL BUTTRESS DESIGN IS REQUIRED.
5. A SPECIAL DESIGN WILL BE REQUIRED FOR PIPELINES GREATER THAN 16-INCH DIAMETER.
6. ALL JOINTS SHALL BE RESTRAINED A DISTANCE FROM THE BEND AS SHOWN IN THE ABOVE TABLE.

HARFORD COUNTY, MD
DEPARTMENT OF PUBLIC WORKS
Robert B. Cooper

STANDARD WATER DETAILS

BUTTRESS FOR HORIZONTAL 1/4 BENDS

ISSUED 7/1/98
REVISED 3/15/09
REVISED

PLATE W-7

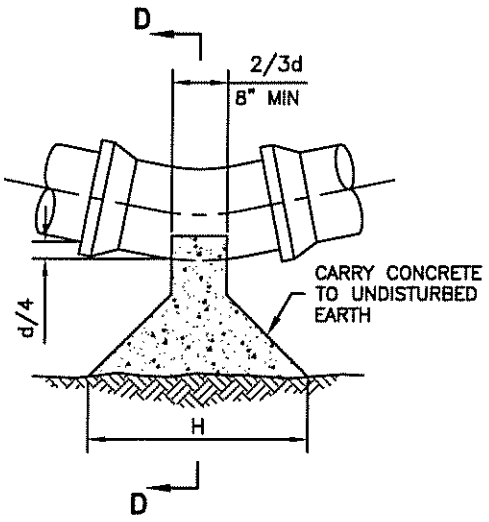

ELEVATION

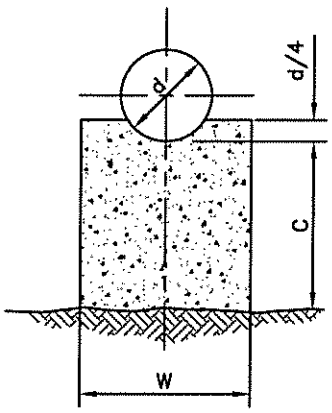

SECTION D–D

BUTTRESS DIMENSIONS FOR LOWER VERTICAL BENDS (INCHES)					
BEND \ SIZE		6	8	12	16
1/8 (45°)	W	15	25	36	47
	H	12	20	29	38
	C	8	9	11	14
1/16 (22 ½°)	W	13	18	26	33
	H	11	14	21	27
	C	8	9	11	14
1/32 (11 ¼°)	W	10	13	19	24
	H	8	10	15	19
	C	7	7	8	9

BUTTRESS FOR VERTICAL BENDS

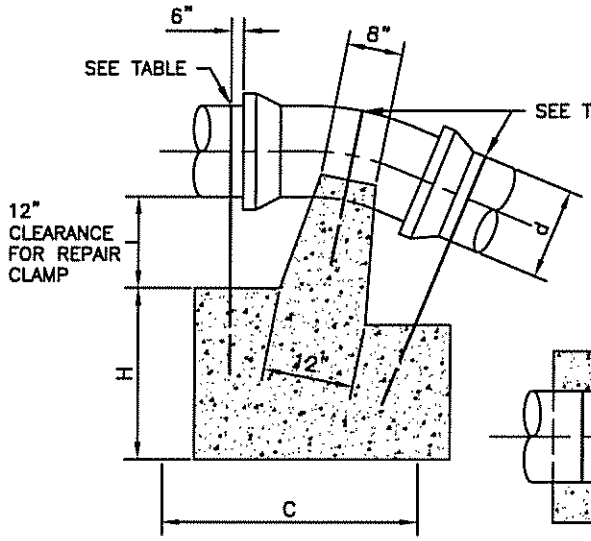

ELEVATION

EMBED BARS 30 DIAMETERS. PAINT EXPOSED BARS w/AN APPROVED BITUMINOUS COATING.

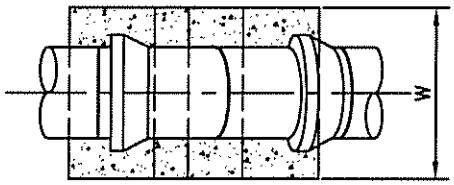

PLAN

REINFORCING BARS (INCHES)				
BEND \ SIZE	6	8	10	12
1/8	3 #5	3 #5	4 #5	4 #5
1/16	3 #5	3 #5	4 #5	4 #5
1/32	3 #5	3 #5	4 #5	4 #5

ANCHORAGES FOR UPPER VERTICAL BENDS (INCHES)				
BEND \ SIZE		6	8	12
1/8 (45°)	W	36	48	66
	H	36	42	54
	C	48	54	66
1/16 (22 ½°)	W	36	45	60
	H	30	32	36
	C	36	42	60
1/32 (11 ¼°)	W	24	30	45
	H	21	30	32
	C	36	36	45

ANCHORAGE FOR VERTICAL BENDS

NOTES:

1. ALL CONCRETE TO BE MIX No. 2.
2. BUTTRESS DIMENSIONS ARE BASED UPON SOIL BEARING PRESSURE OF 3000 PSF AND STATIC WATER PRESSURE OF 200 PSI. WHERE PRESSURE EXCEEDS 200 PSI OR WHERE SOIL BEARING PRESSURE IS LESS THAN 3000 PSF, A SPECIAL BUTTRESS DESIGN IS REQUIRED.
3. MINOR VARIATIONS IN BUTTRESS SHAPE WILL BE PERMITTED, PROVIDED THE MINIMUM BEARING AGAINST UNDISTURBED EARTH IS MAINTAINED.
4. ANCHORING BARS TO CONFORM TO PIPE O.D. PROVIDE A CONTINUOUS BEARING SURFACE FOR ONE HALF THE PIPE PERIMETER.
5. WHEN ANCHORING PVC PIPE, THE STRAPPING IN CONTACT WITH THE PIPE SURFACE SHALL BE 1" WIDE x ¼" THICK STEEL (NOT SHOWN). THE REMAINING PORTION OF THE STRAP SHALL BE A REINFORCING BAR SIZED IN ACCORDANCE WITH THE PERTINENT CHART.
6. A SPECIAL DESIGN WILL BE REQUIRED FOR WATER MAINS 16 INCHES IN DIAMETER OR LARGER AND ALL 90° BENDS.

HARFORD COUNTY, MD
DEPARTMENT OF PUBLIC WORKS

STANDARD WATER DETAILS

BUTTRESSES AND ANCHORAGES FOR VERTICAL BENDS

ISSUED 07/98
REVISED 11/10/14

PLATE W-8

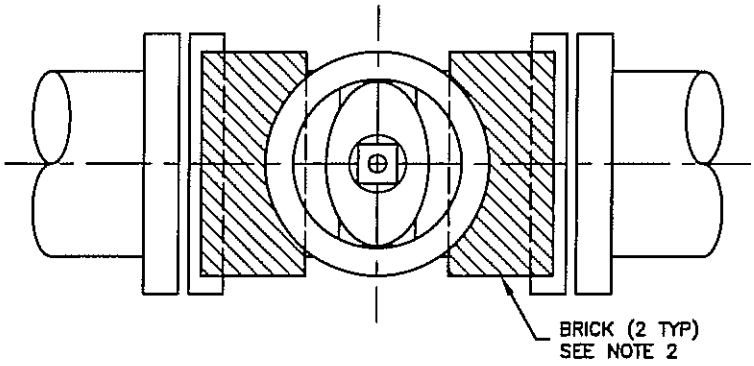

SECTION A–A

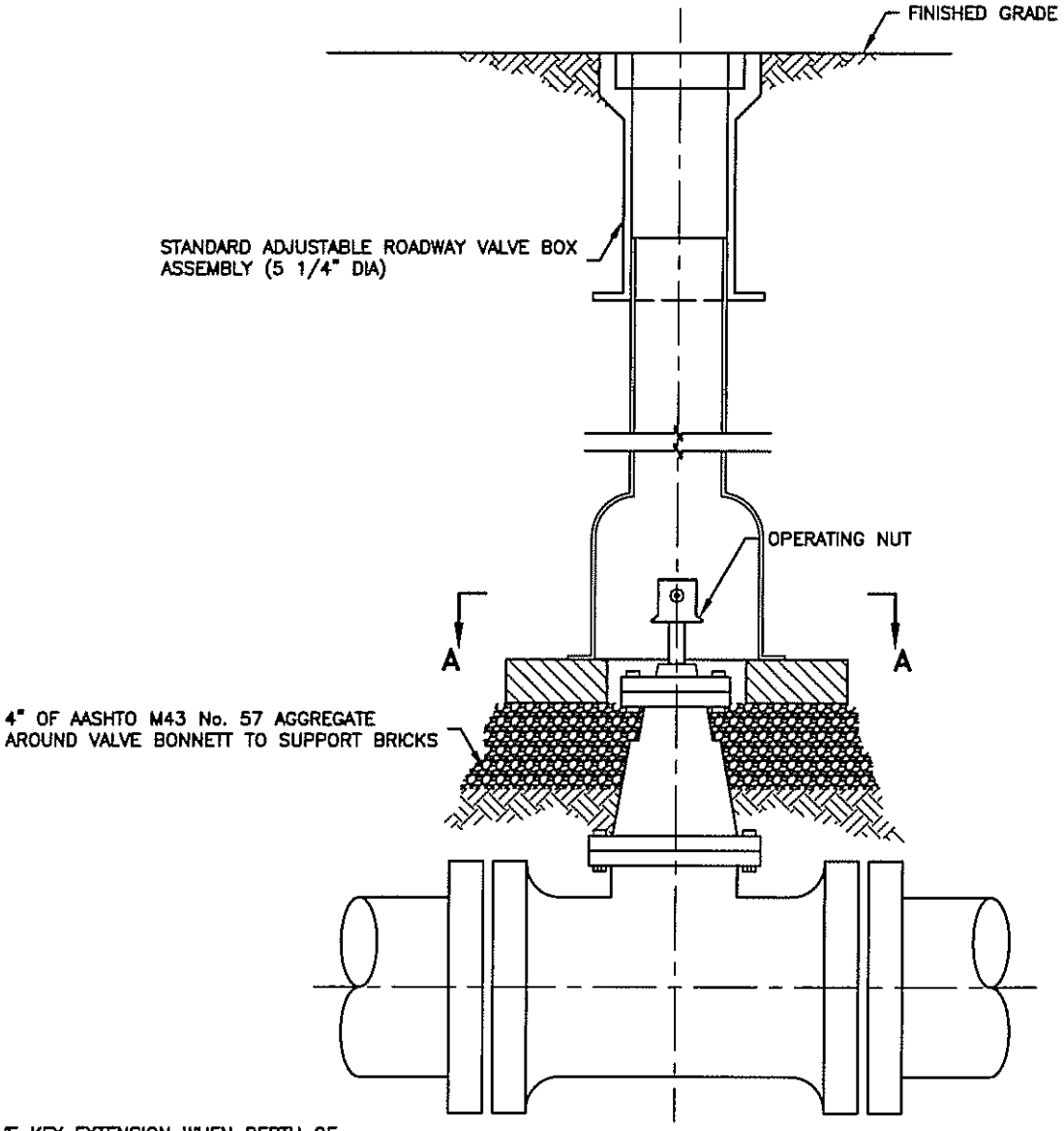

ELEVATION

NOTES:

1. PROVIDE VALVE KEY EXTENSION WHEN DEPTH OF VALVE OPERATING NUT EXCEEDS 6'–0".
2. SUPPORT VALVE BOX WITH TWO BRICKS LAID PARALLEL TO VALVE BONNETT.

HARFORD COUNTY, MD DEPARTMENT OF PUBLIC WORKS	STANDARD WATER DETAILS WATER MAIN VALVE w/ROADWAY BOX	ISSUED 07/98 REVISED 11/10/14 PLATE W–9

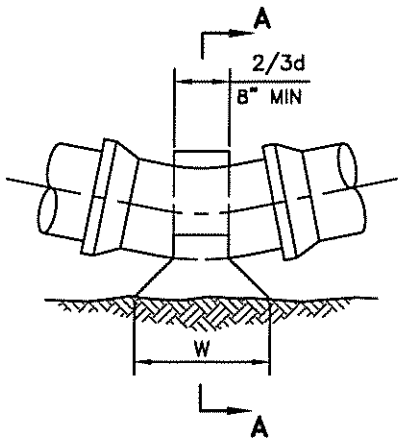

PLAN

BUTTRESS DIMENSIONS FOR LOWER HORIZONTAL BENDS (INCHES)					
BEND	D	6	8	12	16
1/8 (45°)	W	15	25	36	47
	H	12	20	29	38
	C	8	9	11	14
1/16 (22 ½°)	W	13	18	26	33
	H	11	14	21	27
	C	8	9	11	14
1/32 (11 ¼°)	W	10	13	19	24
	H	8	10	15	19
	C	7	7	8	9

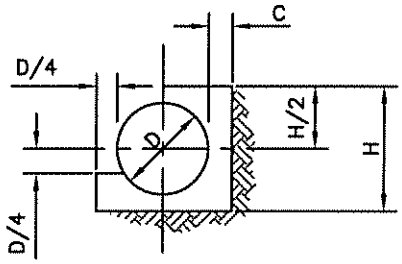

SECTION A–A

BUTTRESS FOR HORIZONTAL BENDS

NOTE:

1. CARRY CONCRETE TO UNDISTURBED EARTH.

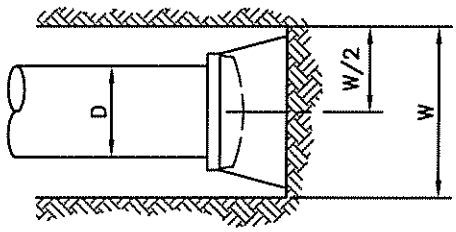

PLAN

BUTTRESS DIMENSIONS FOR CAPS (INCHES)				
D	6	8	12	16
E	6	8	10	12
H	19	25	38	50
W	15	20	30.5	40

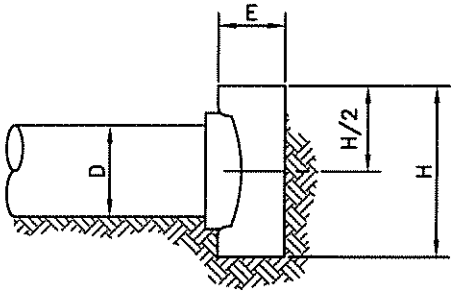

SECTION

BUTTRESS FOR CAPS

NOTES:

1. ALL CONCRETE TO BE MIX No. 2.
2. BUTTRESS DIMENSIONS SHOWN ARE MINIMUM. DIMENSIONS ARE BASED UPON SOIL BEARING PRESSURE OF 3000 PSF AND STATIC PRESSURE OF 200 PSI. WHERE PRESSURE EXCEEDS 200 PSI OR WHERE SOIL BEARING PRESSURE IS LESS THAN 3000 PSF SPECIAL BUTTRESS DESIGN IS REQUIRED.
3. MINOR VARIATION IN BUTTRESS SHAPE WILL BE PERMITTED, PROVIDED THE MINIMUM BEARING AGAINST SOLID GROUND IS MAINTAINED.
4. A SPECIAL DESIGN WILL BE REQUIRED FOR PIPELINES GREATER THAN 16 INCH IN DIAMETER AND ALL 90° BENDS.

HARFORD COUNTY, MD
DEPARTMENT OF PUBLIC WORKS

STANDARD WATER DETAILS

BUTTRESSES FOR CAPS AND HORIZONTAL BENDS

ISSUED 07/98
REVISED 11/10/14

PLATE W-10

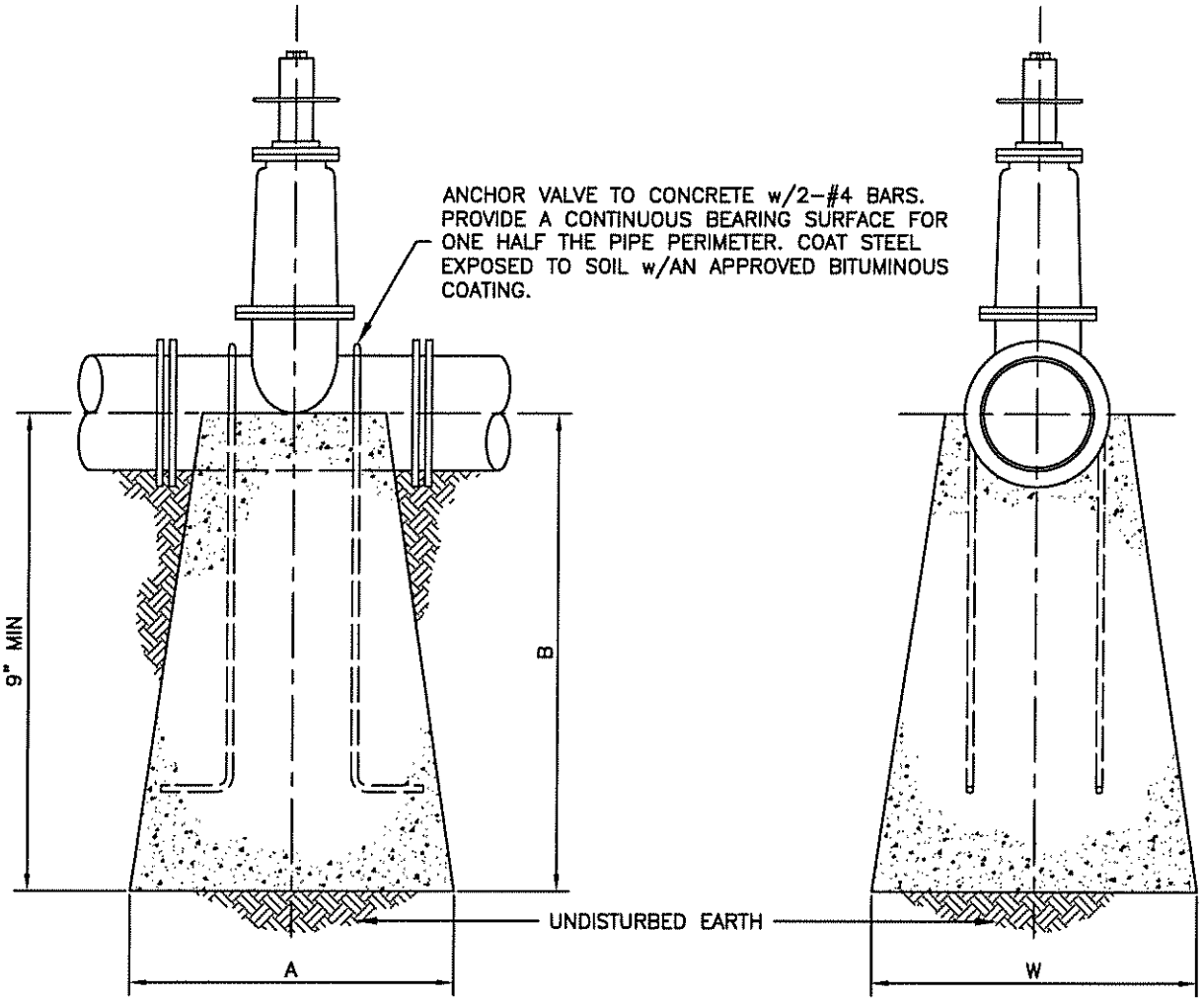

PIPE SIZE	A	B	W
4"	9"	1'–0"	1'–0"
6"	10"	1'–6"	1'–0"
8"	1'–0"	2'–0"	2'–0"
12"	1'–0"	2'–0"	3'–0"

NOTES:

1. WHERE VALVES ARE GREATER THAN 6 FT IN DEPTH, A VALVE EXTENSION SHALL BE ADDED.
2. ALL CONCRETE TO BE MIX No. 2.
3. BUTTRESS DIMENSIONS SHOWN ARE MINIMUM. DIMENSIONS ARE BASED UPON SOIL BEARING PRESSURE OF 3000 PSF AND STATIC PRESSURE OF 200 PSI. WHERE PRESSURE EXCEEDS 200 PSI OR WHERE SOIL BEARING PRESSURE IS LESS THAN 3000 PSF SPECIAL BUTTRESS DESIGN IS REQUIRED.
4. PROVIDE VALVE KEY EXTENSION WHEN DEPTH OF VALVE OPERATING NUT EXCEEDS 6'–0".
5. A SPECIAL DESIGN WILL BE REQUIRED FOR VALVES GREATER THAN 12 INCHES.

HARFORD COUNTY, MD
DEPARTMENT OF PUBLIC WORKS

STANDARD WATER DETAILS

ANCHORAGES FOR VALVES WITH PVC PIPE

ISSUED 07/98
REVISED 11/10/14

PLATE W–11

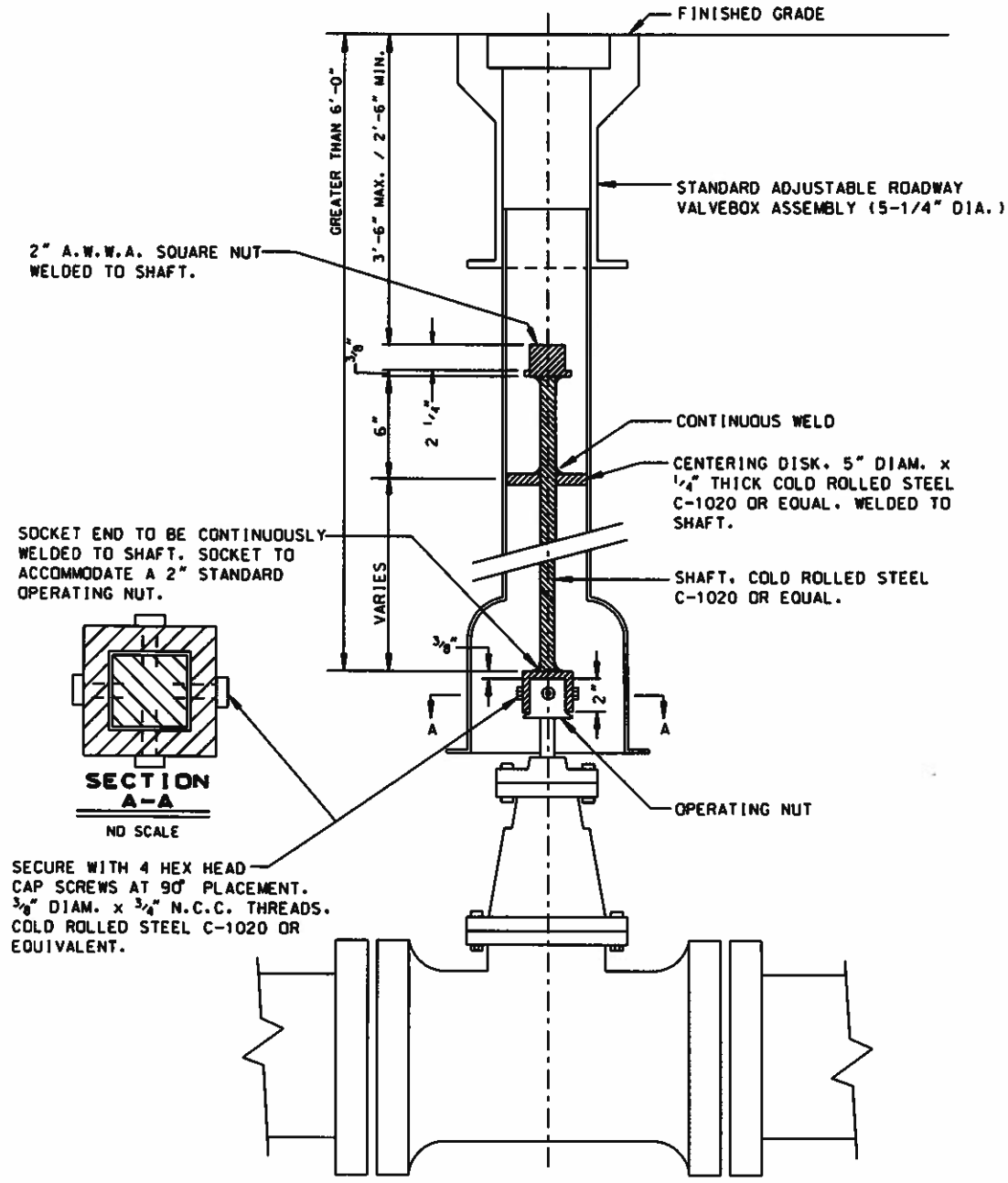

SHAFT EXTENSION DIAMETER	
VALVE SIZE	INCHES
8" OR LESS	1"
10" TO 12"	1-1/4"
16" AND UP	1-1/2"

NOTES:

1. PROVIDE VALVE KEY EXTENSION WHEN DEPTH OF VALVE OPERATING NUT EXCEEDS 6'-0".
2. ALL EXPOSED METAL TO BE BITUMINOUS COATED.
3. OVERALL LENGTH OF VALVE KEY EXTENSION TO BE DETERMINED BY FIELD MEASUREMENT TO PROVIDE 2'-6" TO 3'-6" DEPTH FROM GRADE LEVEL.

HARFORD COUNTY, MD
DEPARTMENT OF PUBLIC WORKS

Robert B. Coughlin

STANDARD WATER DETAILS

WATER MAIN VALVE KEY EXTENSION

ISSUED 7/1/98
REVISED
REISSUED 3/15/09

PLATE W-12

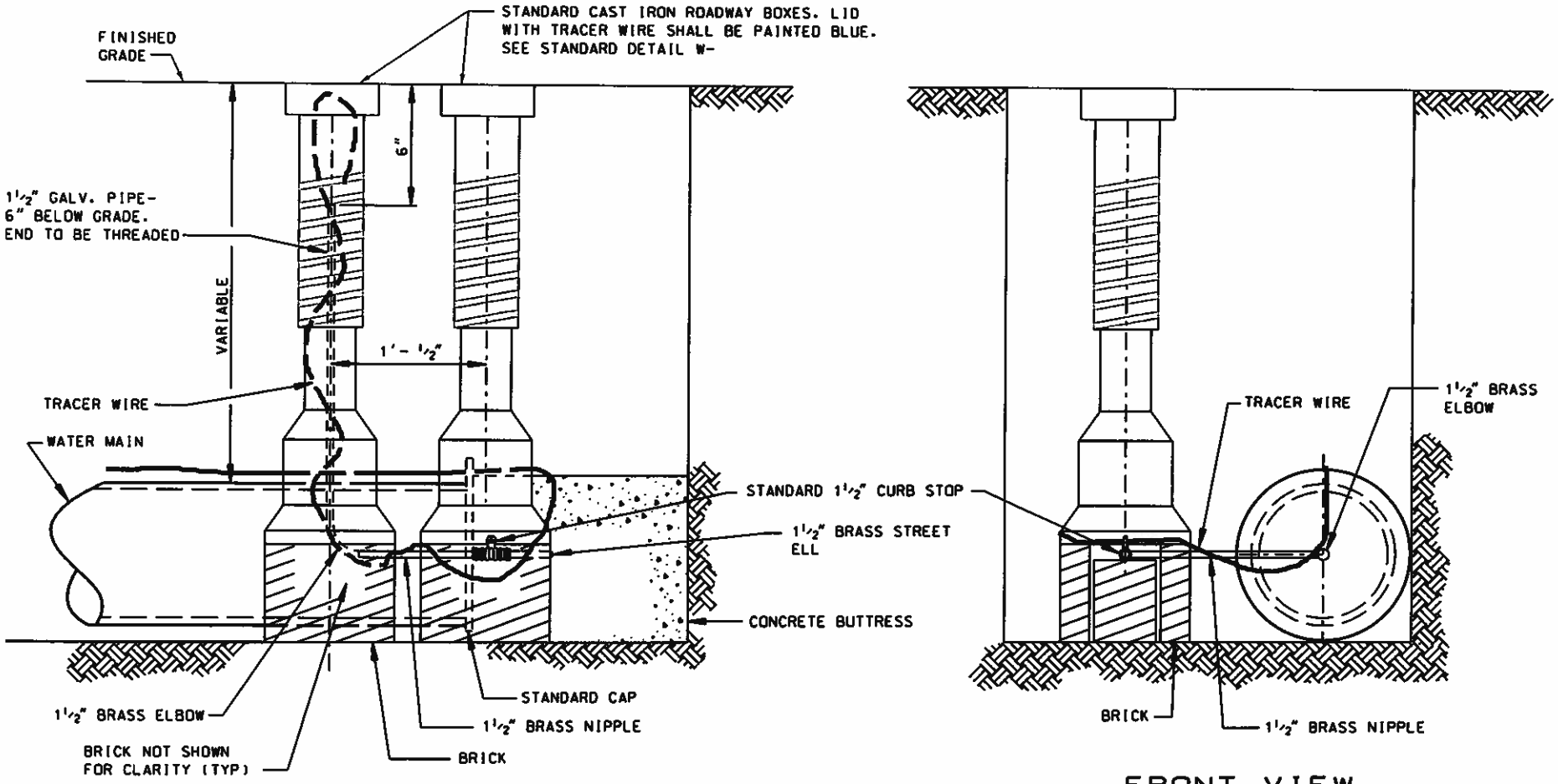

NOTES:

1. 2" MAINS SHALL USE ¾" BRASS FITTINGS AS SHOWN ABOVE.
2. PROVIDE ONE FULL LENGTH OF PIPE (APPROX. 20 FT.) MINIMUM BETWEEN WATER MAIN VALVE AND CAP AND BLOW
3. PROVIDE TRACER WIRE ON ALL NON-METALLIC PIPE. TRACER WIRE SHALL BE LONG ENOUGH TO EXTEND 12" ABOVE TOP OF ROADWAY BOX. STRIP THE INSULATION FROM THE LAST ⅜" OF WIRE AND PLACE WITHIN ROADWAY BOX.
4. PROVIDE VALVE KEY EXTENSION SIMILAR TO W-12 WHEN DEPTH OF SLOTTED KEY EXCEEDS 6'-0".
5. EX. CAP & BLOW MAY NOT BE USED FOR WATER SERVICE. INSTEADEX. MAIN SHALL RECEIVE STANDARD TAPPED SERVICE AND EX. CAP SHALL BE REPLACED WITH NEW CAP AND BUTTRESS.

HARFORD COUNTY, MD
DEPARTMENT OF
PUBLIC WORKS
Robert B Cooper

STANDARD WATER DETAILS

CAP AND BLOW-OFF
4" MAINS AND LARGER

ISSUED	7/98
REVISED	4/17/01
REVISED	11/26/03
REVISED	3/15/09

PLATE W-13

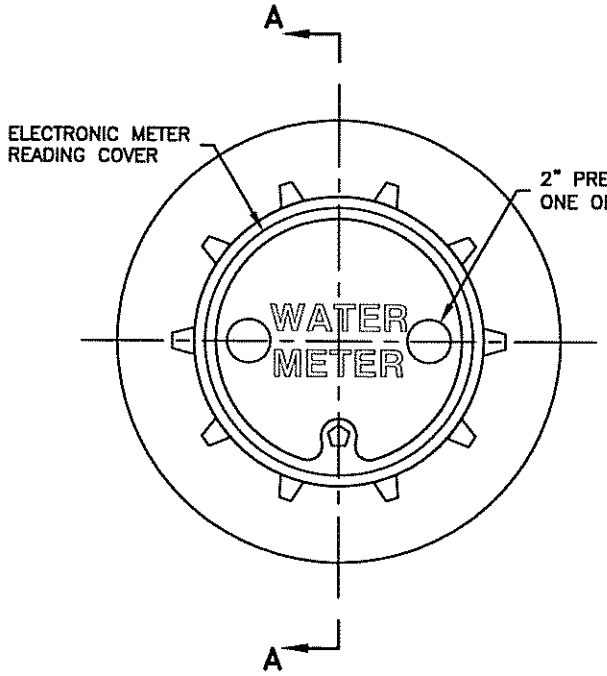

MATERIAL:

CAST GREY IRON
ASTM A48–92 CLASS 30

FRAME AND COVER MUST
SIT SECURELY ON VAULT

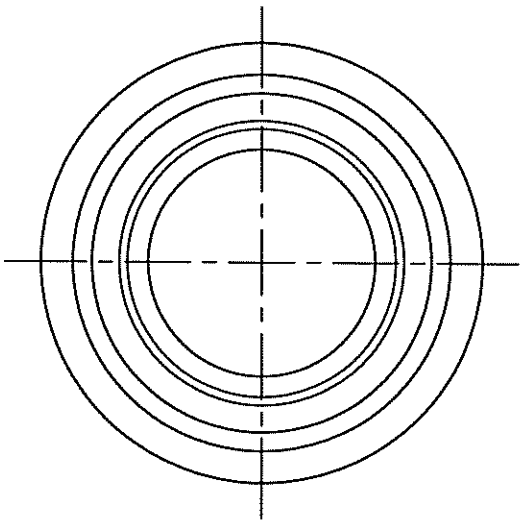

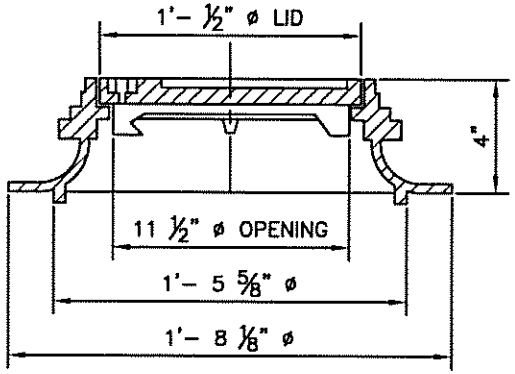

SECTION A–A
METER BOX COVER

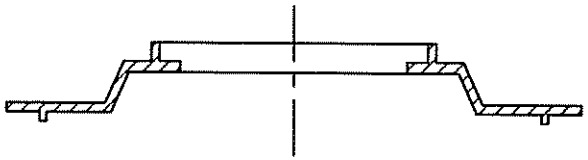

18" TO 24" OR 18" TO 30"
EXTENSION RING

HARFORD COUNTY, MD
DEPARTMENT OF PUBLIC WORKS

STANDARD WATER DETAILS

STANDARD WATER METER
FRAME & COVER

ISSUED 07/98
REVISED 11/10/14

PLATE W–14

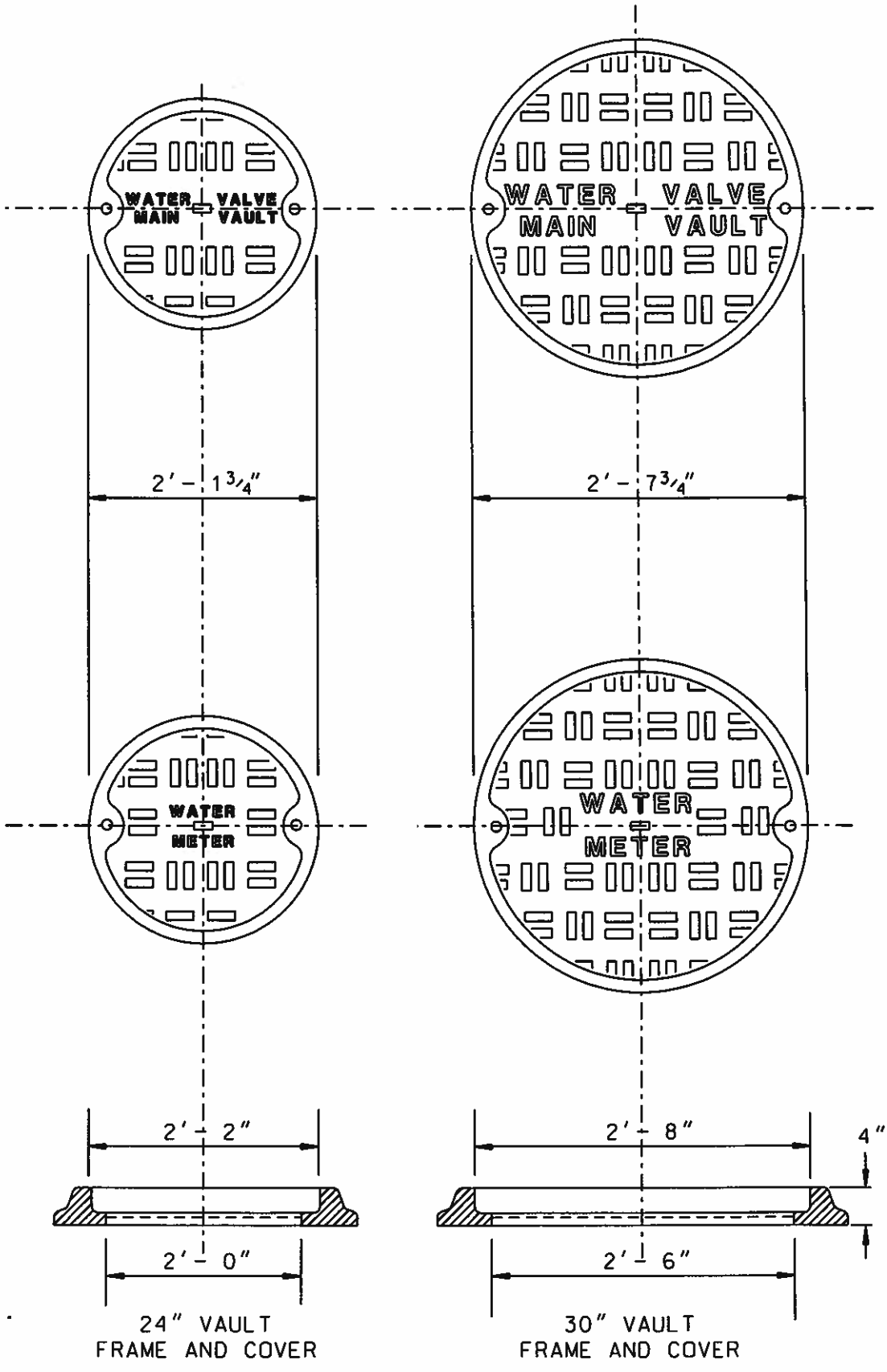

24" VAULT
FRAME AND COVER

30" VAULT
FRAME AND COVER

HARFORD COUNTY, MD
DEPARTMENT OF
PUBLIC WORKS

Robert B. Cooper

STANDARD WATER DETAILS

STANDARD FRAMES
AND COVERS

ISSUED 7/1/98
REVISED
REISSUED 3/15/09

PLATE W-15

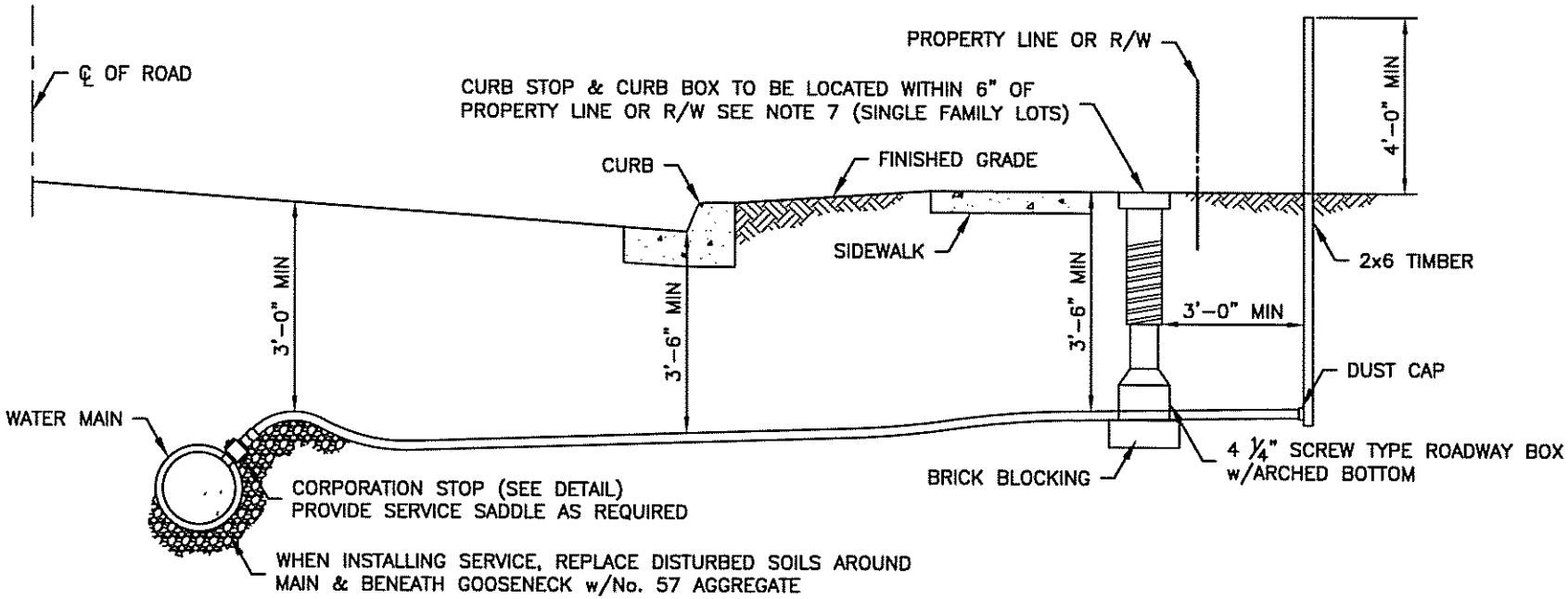

NOTES:

1. MINIMUM PIPE SIZES ARE SPECIFIED.
2. ALL BRASS FITTINGS TO BE COMPRESSION TYPE ONLY.
3. IF DIRECT TAP INTO PVC PIPE: 3–4 WRAPS OF TEFLON TAPE ON THREADS IS REQUIRED.
4. CURB BOX SHALL NOT BE PLACED IN DRIVEWAYS, STEPS OR SIDEWALKS.
5. METER SETTERS SHALL BE PURCHASED BY THE DEVELOPER AND SUBMITTED TO THE DIVISION OF WATER AND SEWER, 3111 PHILADELPHIA RD, FOR COUNTY INSTALLATION.
6. SERVICE LINE FROM MAIN TO CURB BOX SHALL BE ONE CONTINUOUS PIECE (NO JOINTS).
7. PROVIDE VALVE KEY EXTENSION SIMILAR TO W–12, WHEN DEPTH OF SLOTTED KEY EXCEEDS 6'–0".

WATER SERVICES FOR TOWNHOUSES

1 ½" COPPER TUBING FOR TWIN HOUSE CONNECTIONS
1" COPPER TUBING FOR SINGLE HOUSE CONNECTIONS

WATER SERVICES FOR SINGLE FAMILY LOTS

1" COPPER TUBING FOR HOUSE CONNECTIONS w/FIRE SPRINKLER SYSTEMS

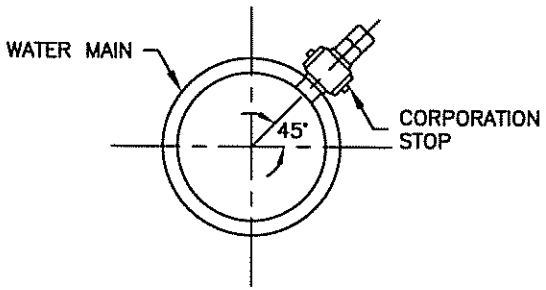

DETAIL

HARFORD COUNTY, MD
DEPARTMENT OF PUBLIC WORKS

STANDARD WATER DETAILS

STANDARD SERVICE CONNECTION
WITH CURB BOX

ISSUED 07/98
REVISED 11/10/14

PLATE W–16

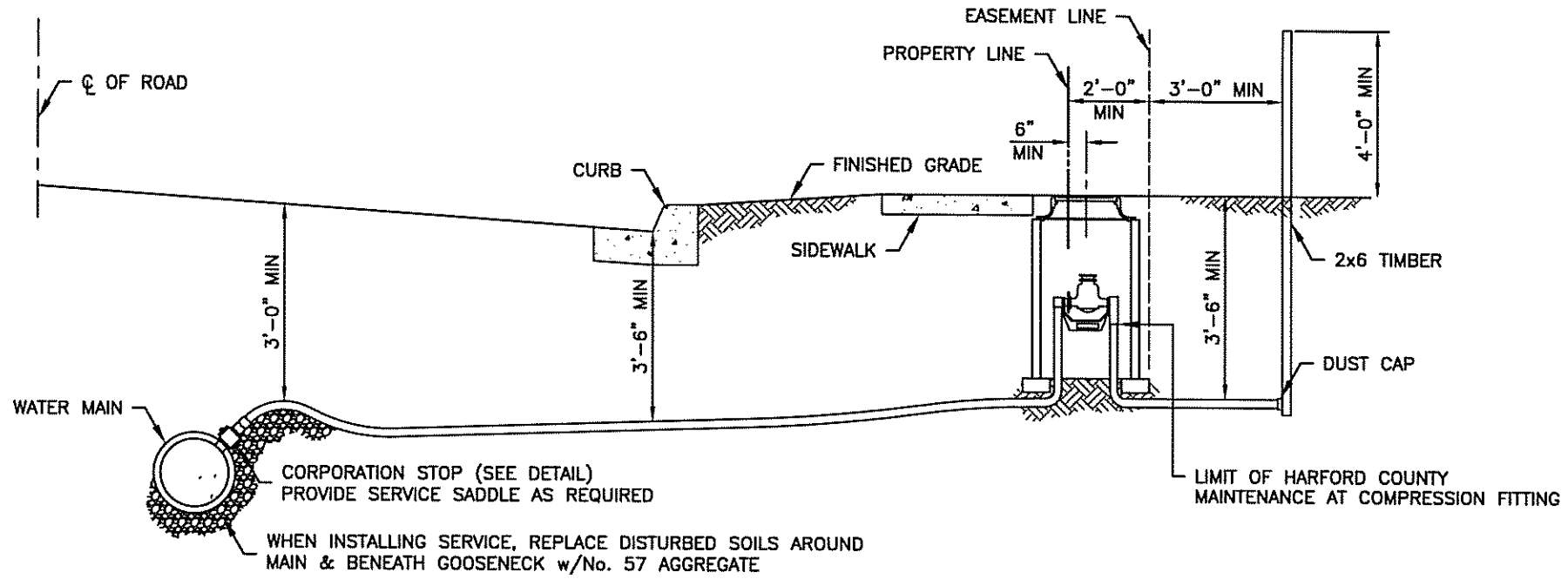

NOTES:

1. MINIMUM PIPE SIZES ARE SPECIFIED.
2. ALL BRASS FITTINGS TO BE COMPRESSION TYPE ONLY.
3. IF DIRECT TAP INTO PVC PIPE: 3–4 WRAPS OF TEFLON TAPE ON THREADS IS REQUIRED.
4. METER VAULT SHALL NOT BE PLACED IN DRIVEWAYS, STEPS OR SIDEWALKS.
5. SERVICE LINE FROM MAIN TO METER VAULT SHALL BE ONE CONTINUOUS PIECE (NO JOINTS).
6. THE LIMIT OF HARFORD COUNTY RESPONSIBILITY IS THE METER VAULT.

WATER SERVICES FOR TOWNHOUSES

1 ½" COPPER TUBING FOR TWIN HOUSE CONNECTIONS
1" COPPER TUBING FOR SINGLE HOUSE CONNECTIONS

WATER SERVICES FOR SINGLE FAMILY LOTS

1" COPPER TUBING FOR HOUSE CONNECTIONS w/SPRINKLER SYSTEMS

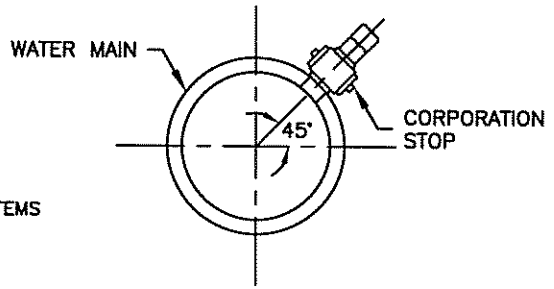

DETAIL

HARFORD COUNTY, MD
DEPARTMENT OF PUBLIC WORKS

STANDARD WATER DETAILS

STANDARD SERVICE CONNECTION
WITH METER VAULT

ISSUED 07/98
REVISED 11/10/14

PLATE W-17

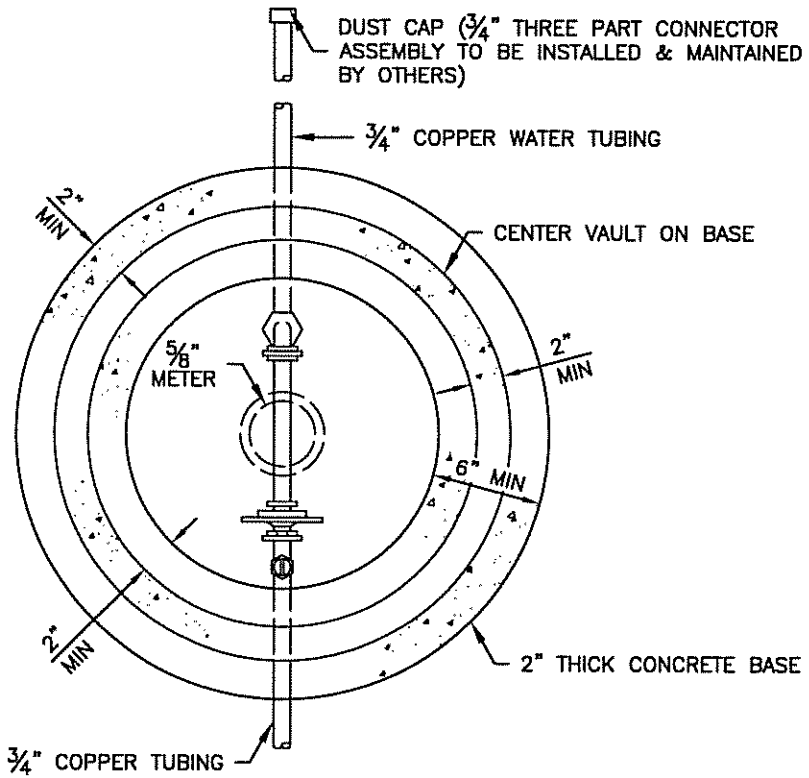

PLAN

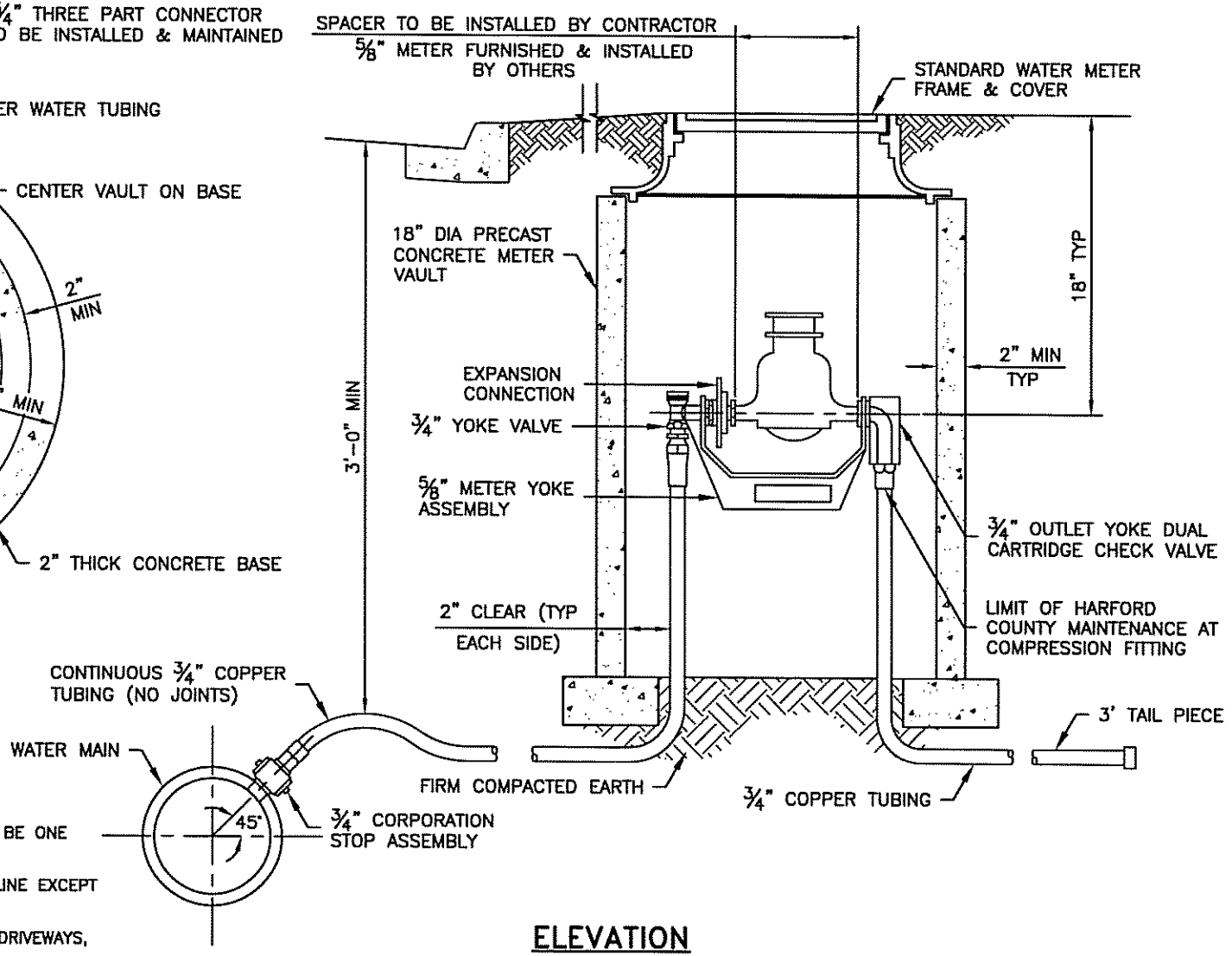

ELEVATION

NOTES:

1. ALL FITTINGS TO BE COMPRESSION FITTINGS.
2. SERVICE LINE FROM MAIN TO METER SHALL BE ONE CONTINUOUS PIECE (NO JOINTS).
3. PROVIDE 3'-6" MIN COVER OVER SERVICE LINE EXCEPT WHERE SHOWN OTHERWISE.
4. METER VAULTS SHALL NOT BE LOCATED IN DRIVEWAYS, SIDEWALKS OR STEPS.

HARFORD COUNTY, MD
DEPARTMENT OF PUBLIC WORKS

STANDARD WATER DETAILS

OUTSIDE SETTING
¾" SUPPLY WITH 5/8" METER
(DOMESTIC SERVICE WITHOUT SPRINKLER SERVICE)

ISSUED 07/98
REVISED 11/10/14

PLATE W-18

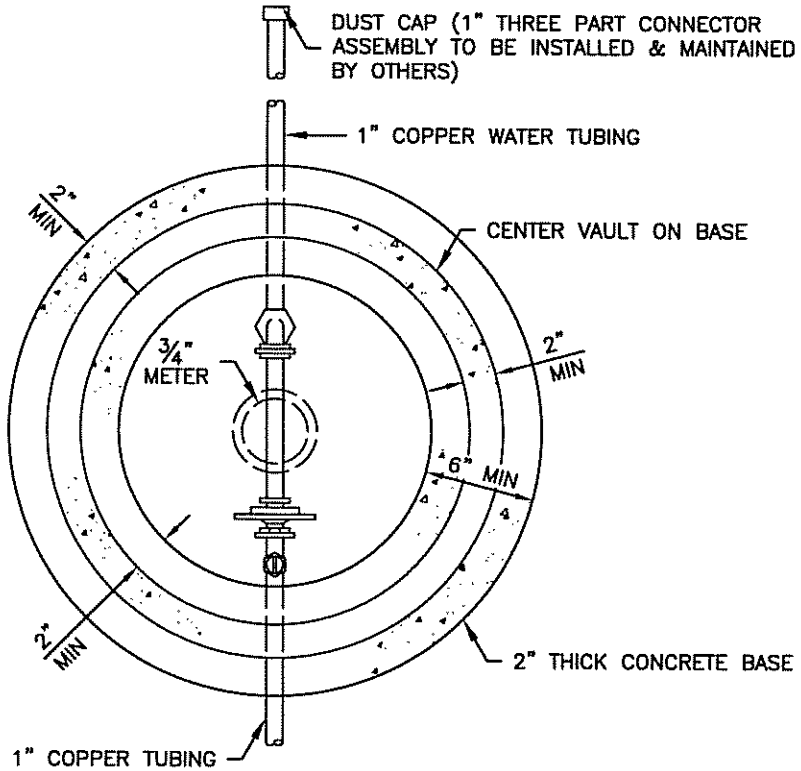

PLAN

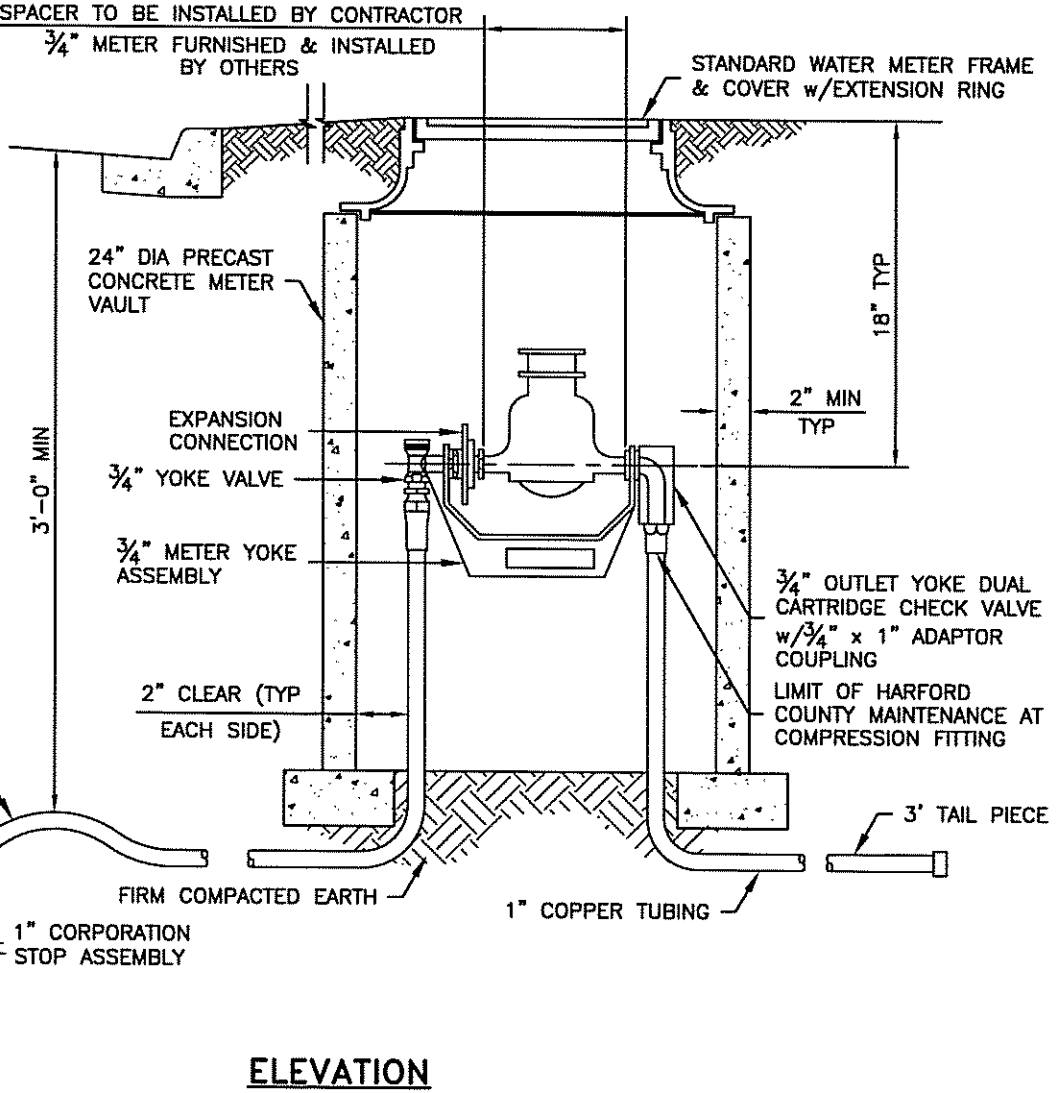

ELEVATION

NOTES:

1. ALL FITTINGS TO BE COMPRESSION FITTINGS.
2. SERVICE LINE FROM MAIN TO METER SHALL BE ONE CONTINUOUS PIECE (NO JOINTS).
3. PROVIDE 3'–6" OF COVER OVER MAIN AND SERVICE LINE EXCEPT WHERE SHOWN OTHERWISE.
4. SEE PLATES G–2, G–3 AND G–3A FOR VAULT LOCATION.
5. METER VAULTS SHALL NOT BE LOCATED IN DRIVEWAYS, SIDEWALKS OR STEPS.

HARFORD COUNTY, MD
DEPARTMENT OF PUBLIC WORKS

STANDARD WATER DETAILS

OUTSIDE SETTING
1" SUPPLY WITH 3/4" METER
(DOMESTIC SERVICE WITH SPRINKLER SERVICE)

ISSUED 07/98
REVISED 11/10/14

PLATE W–19

PAGE LEFT
INTENTIONALLY
BLANK

HARFORD COUNTY, MD DEPARTMENT OF PUBLIC WORKS	STANDARD WATER DETAILS	ISSUED 07/98 REVISED 11/10/14
	NOT USED	PLATE W-20

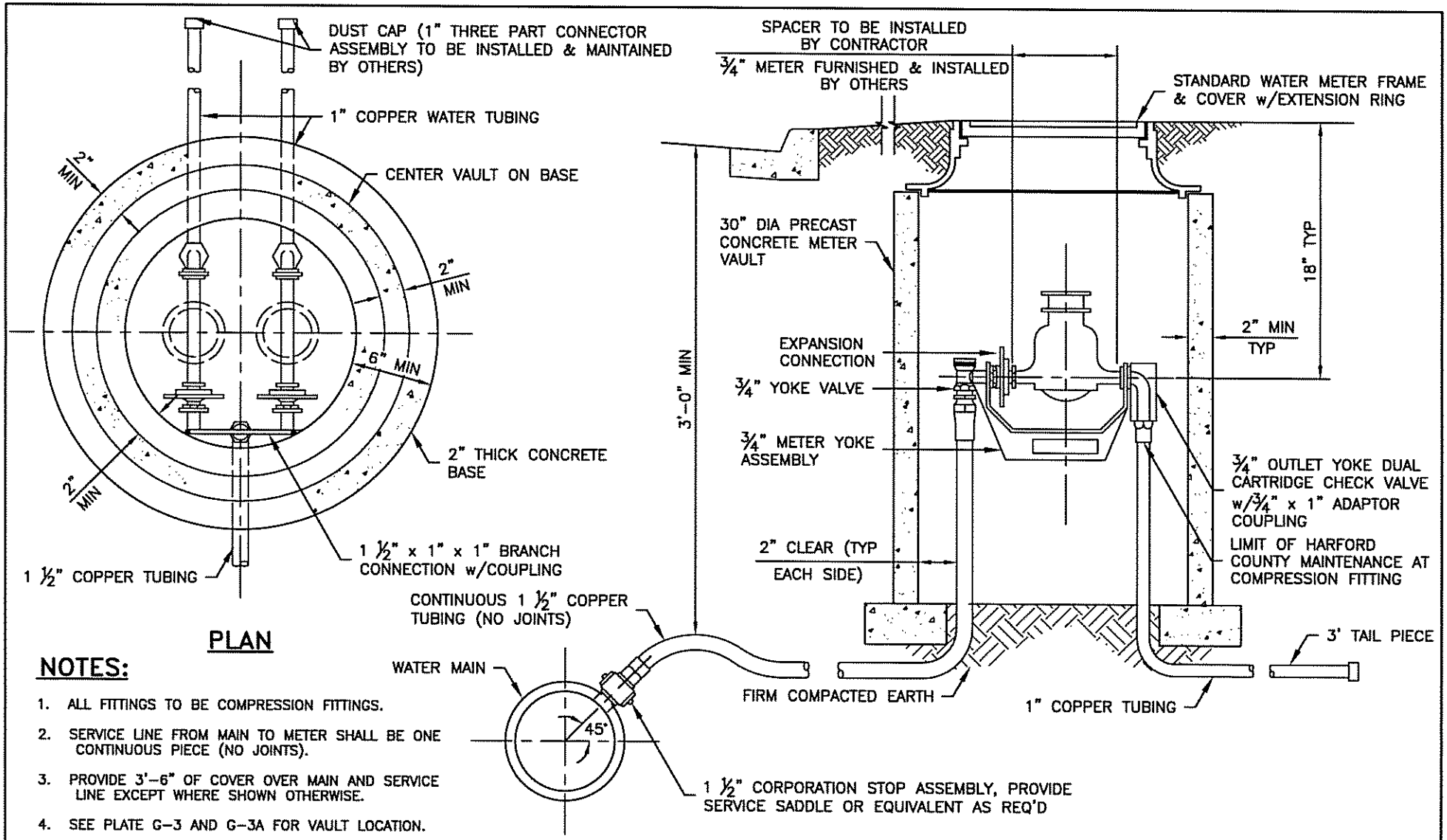

NOTES:

1. ALL FITTINGS TO BE COMPRESSION FITTINGS.
2. SERVICE LINE FROM MAIN TO METER SHALL BE ONE CONTINUOUS PIECE (NO JOINTS).
3. PROVIDE 3'-6" OF COVER OVER MAIN AND SERVICE LINE EXCEPT WHERE SHOWN OTHERWISE.
4. SEE PLATE G-3 AND G-3A FOR VAULT LOCATION.
5. METER VAULTS SHALL NOT BE LOCATED IN DRIVEWAYS, SIDEWALKS OR STEPS.

HARFORD COUNTY, MD
DEPARTMENT OF PUBLIC WORKS

STANDARD WATER DETAILS

OUTSIDE SETTING
1 ½" SUPPLY WITH TWIN ¾" METERS FOR TOWNHOMES
(DOMESTIC SERVICE WITH SPRINKLER SERVICE)

ISSUED 07/98
REVISED 11/10/14

PLATE W-21

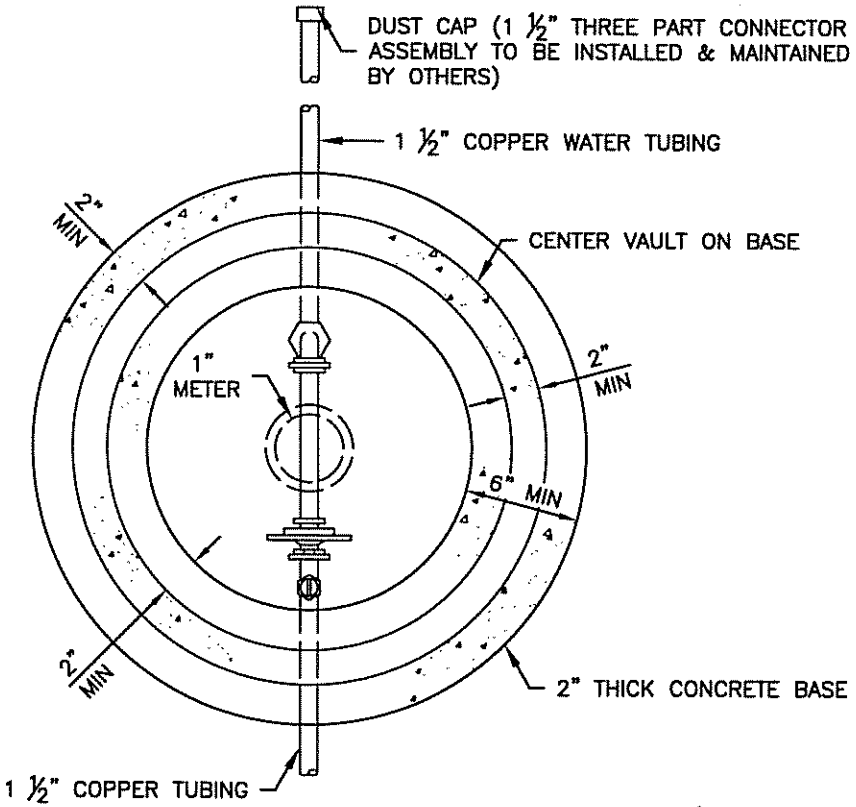

PLAN

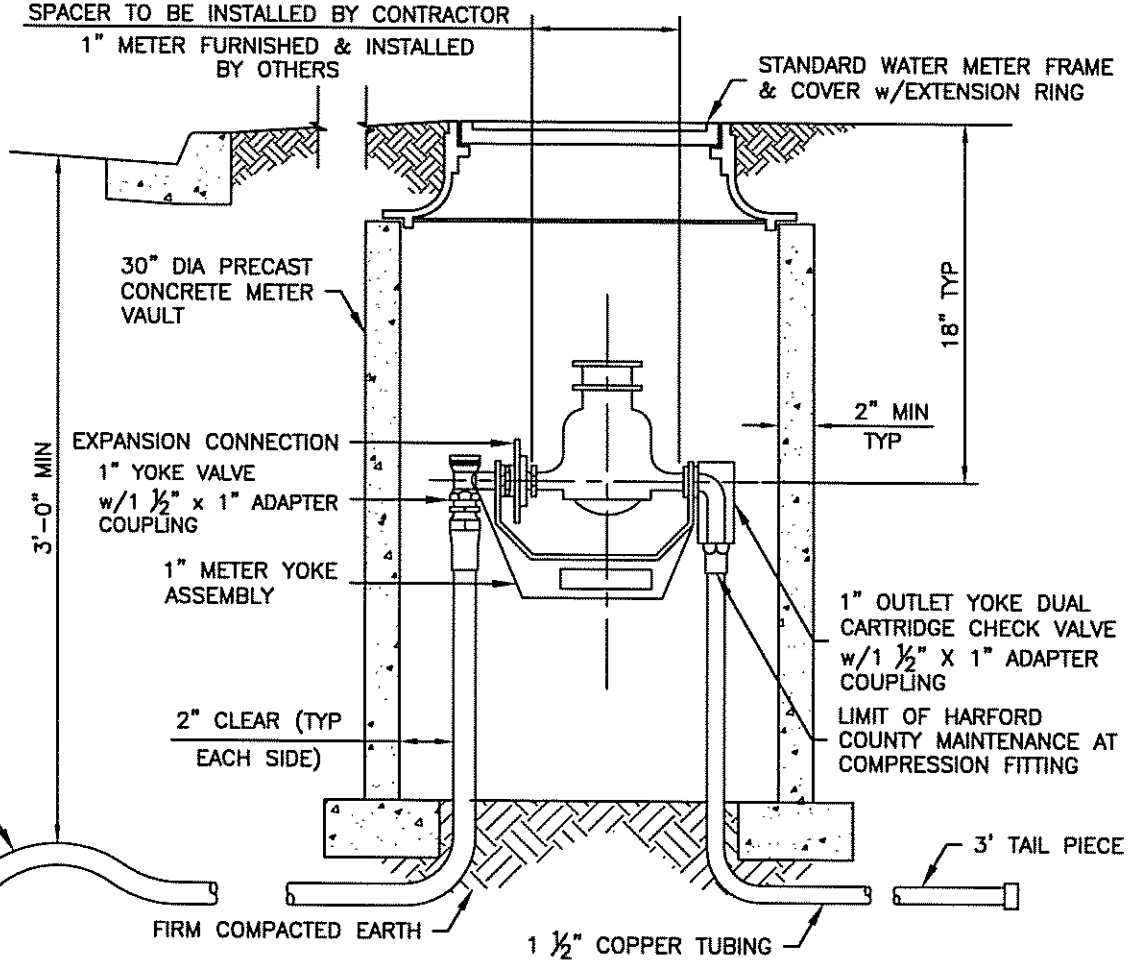

ELEVATION

NOTES:

1. ALL FITTINGS TO BE COMPRESSION FITTINGS.
2. SERVICE LINE FROM MAIN TO METER SHALL BE ONE CONTINUOUS PIECE (NO JOINTS).
3. PROVIDE 3'–6" OF COVER OVER MAIN AND SERVICE LINE EXCEPT WHERE SHOWN OTHERWISE.
4. SEE PLATE G–2 FOR VAULT LOCATION.
5. METER VAULTS SHALL NOT BE LOCATED IN DRIVEWAYS, SIDEWALKS OR STEPS.

HARFORD COUNTY, MD
DEPARTMENT OF PUBLIC WORKS

STANDARD WATER DETAILS

OUTSIDE SETTING
1 ½" SUPPLY WITH 1" METER

ISSUED 07/98
REVISED 11/10/14

PLATE W–22

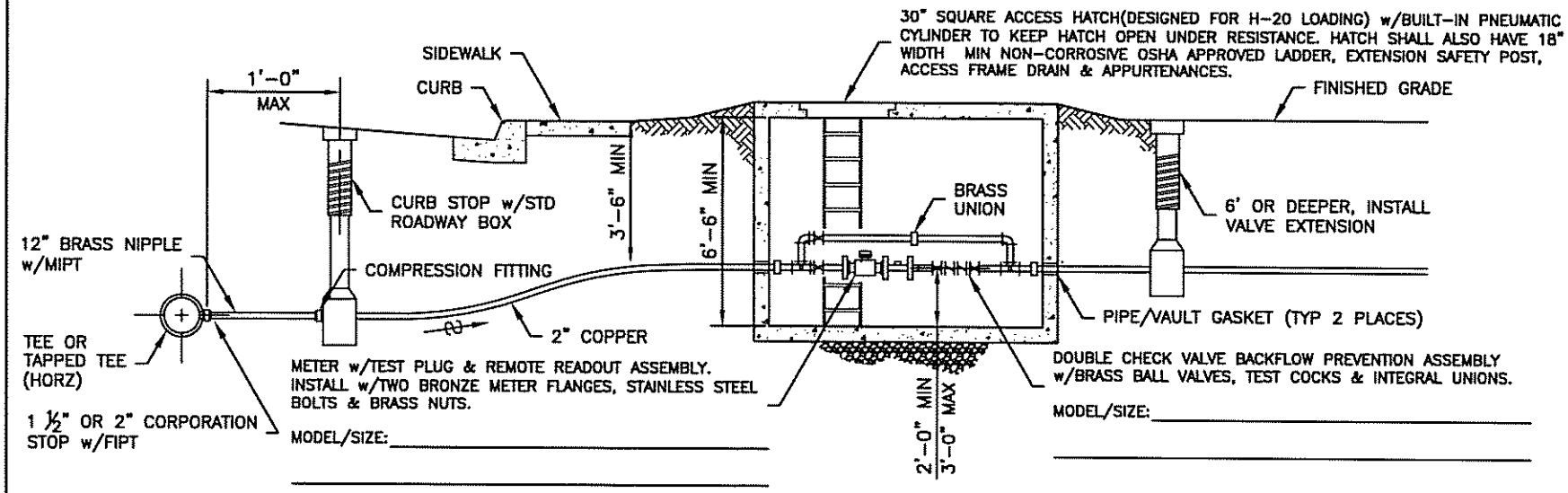

ELEVATION

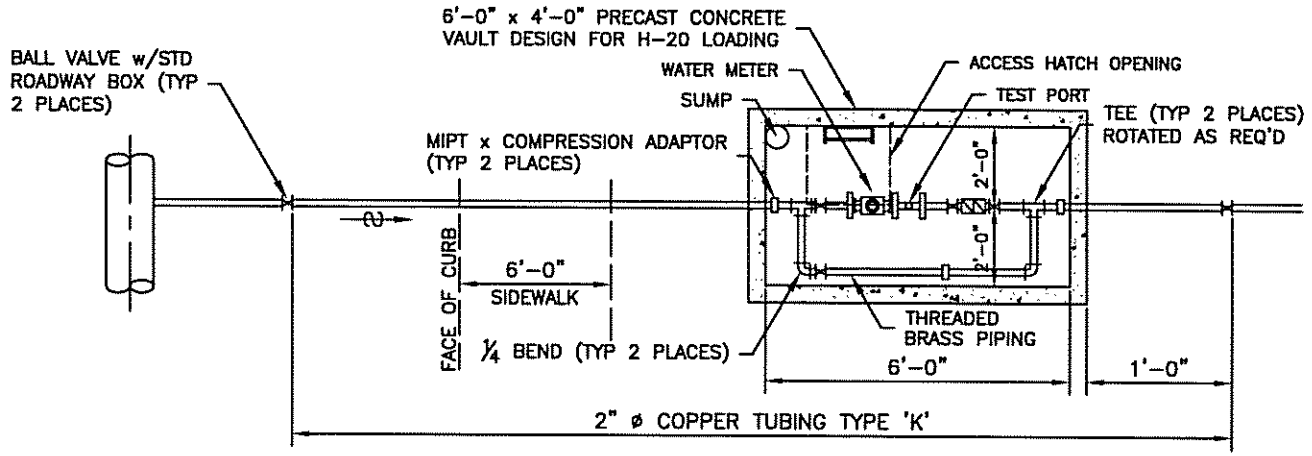

PLAN

NOTES:

1. PERMANENT BRICK, CONCRETE OR APPROVED PRECAST PIPE SUPPORTS (NOT SHOWN) TO BE PLACED UNDER ALL FLANGED FITTINGS AND AS DIRECTED BY THE COUNTY.
2. ALL FITTINGS AND NIPPLES SHALL BE BRASS WITH APPROPRIATE ADAPTORS.
3. SET VAULT ON A LEVELING COURSE OF AASHTO M43 SIZE 57 AGGREGATE.
4. PROVIDE POSITIVE DRAINAGE AWAY FROM VAULT.
5. SIMILAR DESIGN OF PIPING AND EQUIPMENT FOR COMMERCIAL INTERIOR BUILDING INSTALLATIONS.
6. TYPE 'K' COPPER TUBING SHALL BE CONTINUOUS BETWEEN VALVE UP TO SPECIFICALLY ORDERED MAXIMUM AVAILABLE LENGTHS.
7. SUMP SHALL HAVE A 8" MINIMUM DIAMETER AND A 4" MINIMUM DEPTH.
8. SOLDERED COPPER JOINTS ARE PROHIBITED.
9. PRIOR TO ORDERING THE METER SETTING AND BACKFLOW PREVENTER, THE CONTRACTOR SHALL SCHEDULE AND HOLD A MEETING WITH THE DIVISION OF WATER AND SEWER MAINTENANCE CHIEF TO DISCUSS THE INSTALLATION REQUIREMENTS.
10. THE EXTERIOR OF THE CONCRETE VAULT SHALL HAVE A FACTORY APPLIED BITUMINOUS COATING.

HARFORD COUNTY, MD
DEPARTMENT OF PUBLIC WORKS

STANDARD WATER DETAILS

OUTSIDE SETTING
1 ½" AND 2" METERED SERVICE

ISSUED 07/98
REVISED 11/10/14

PLATE W-23

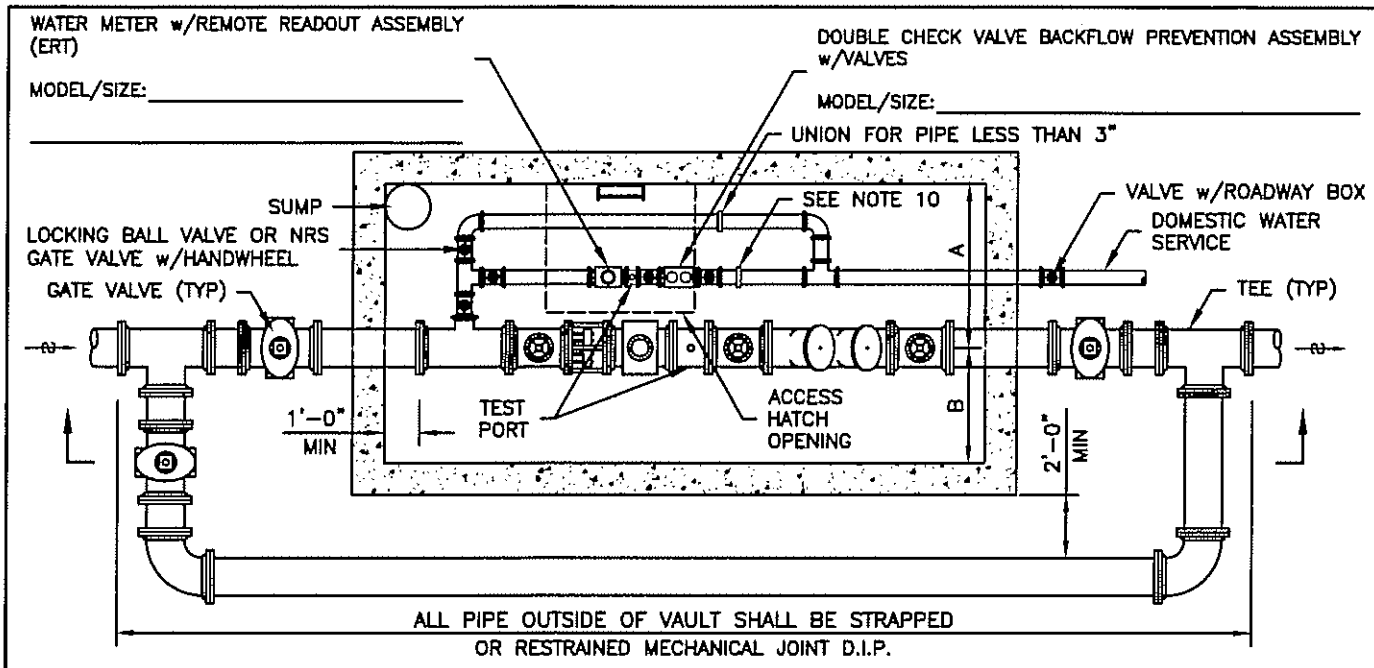

PLAN

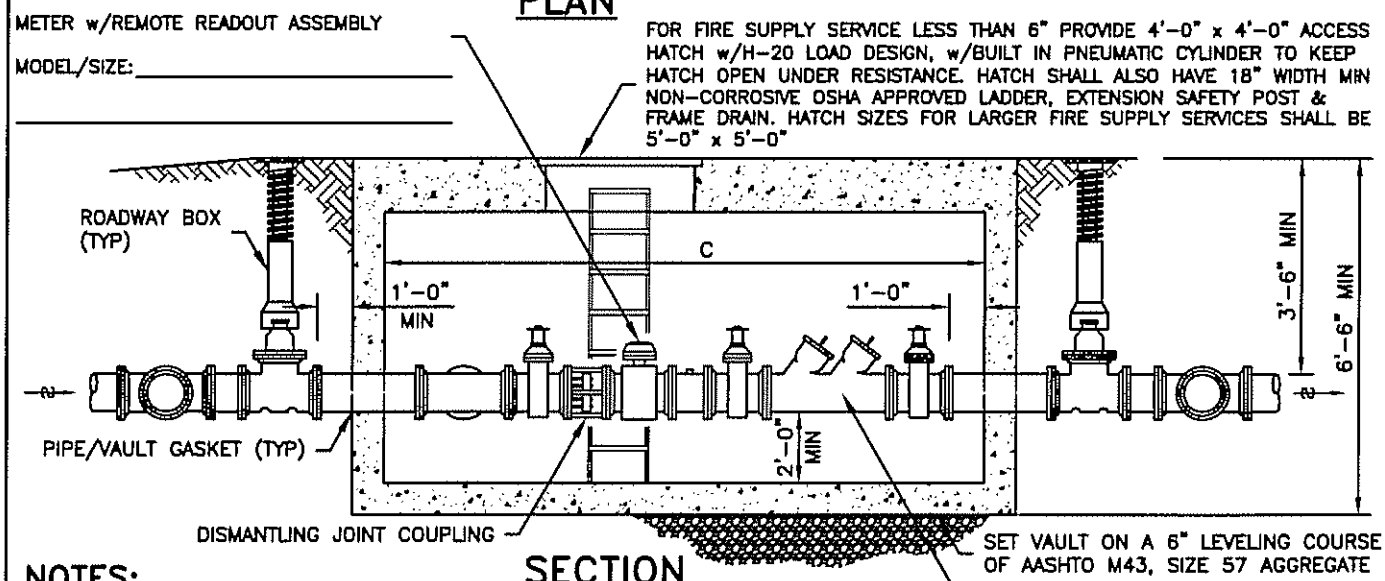

SECTION

NOTES:

1. PERMANENT BRICK, CONCRETE OR APPROVED PRECAST PIPE SUPPORTS (NOT SHOWN) TO BE PLACED UNDER ALL FLANGED FITTINGS AND AS DIRECTED BY THE COUNTY.
2. LOADS: L.L. = AASHTO H-20, D.L. = EARTH @ 110 LBS PER CU FT AND 42 LBS PER CU FT EQUIVALENT FLUID PRESSURE.
3. CONCRETE AND REINFORCING SHALL CONFORM TO STANDARD SPECIFICATIONS.
4. PROVIDE POSITIVE DRAINAGE AWAY FROM VAULT.
5. FOR INTERIOR COMMERCIAL INSTALLATION, A REDUCED PRESSURE BACKFLOW PREVENTION ASSEMBLY WITH DETECTOR ASSEMBLY MAY BE REQUIRED.
6. ALL PIPE WITHIN THE VAULT SHALL BE FLANGED.
7. ALL FLANGES AND METERS SHALL RECEIVE STAINLESS STEEL BOLTS AND BRASS NUTS.
8. ALL FITTINGS TO BE BRASS OR DUCTILE IRON.
9. SUMP SHALL HAVE AN 8" MIN DIA AND A 4" MIN DEPTH.
10. PRIOR TO ORDERING THE METER SETTING AND BACKFLOW PREVENTER, THE CONTRACTOR SHALL SCHEDULE AND HOLD A MEETING WITH THE DIVISION OF WATER AND SEWER MAINTENANCE CHIEF TO DISCUSS THE INSTALLATION REQUIREMENTS.
11. INSTALL DISMANTLING JOINT FOR DOMESTIC 3" AND LARGER.
12. THE EXTERIOR OF THE CONCRETE VAULT SHALL HAVE A FACTORY APPLIED BITUMINOUS COATING.

FIRE SERVICE BACKFLOW PREVENTER SIZE	A	B	C
3"	72	42	132
4"	73	41	144
6"	74	52	168
8"	78	54	192
10"	78	54	222

HARFORD COUNTY, MD
DEPARTMENT OF PUBLIC WORKS

STANDARD WATER DETAILS

OPEN SYSTEM
DOMESTIC WATER SERVICE
WITH FIRE SUPPLY

ISSUED 07/98
REVISED 11/10/14

PLATE W-24a

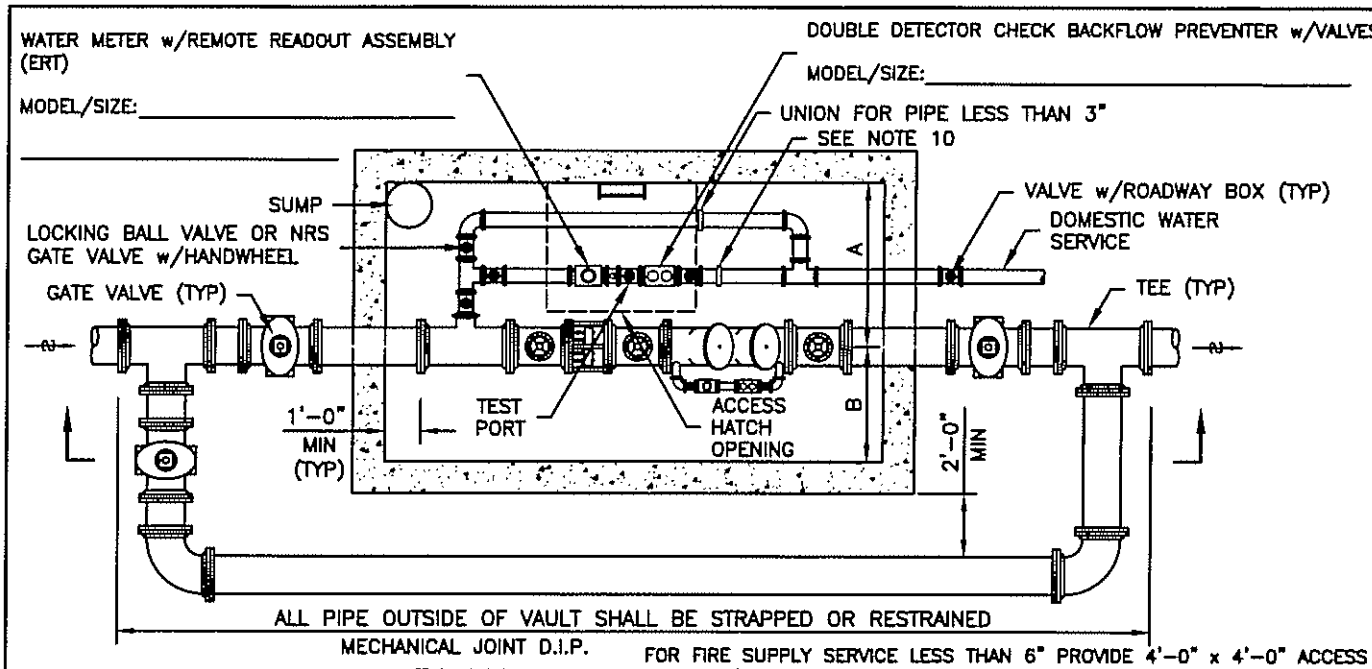

PLAN

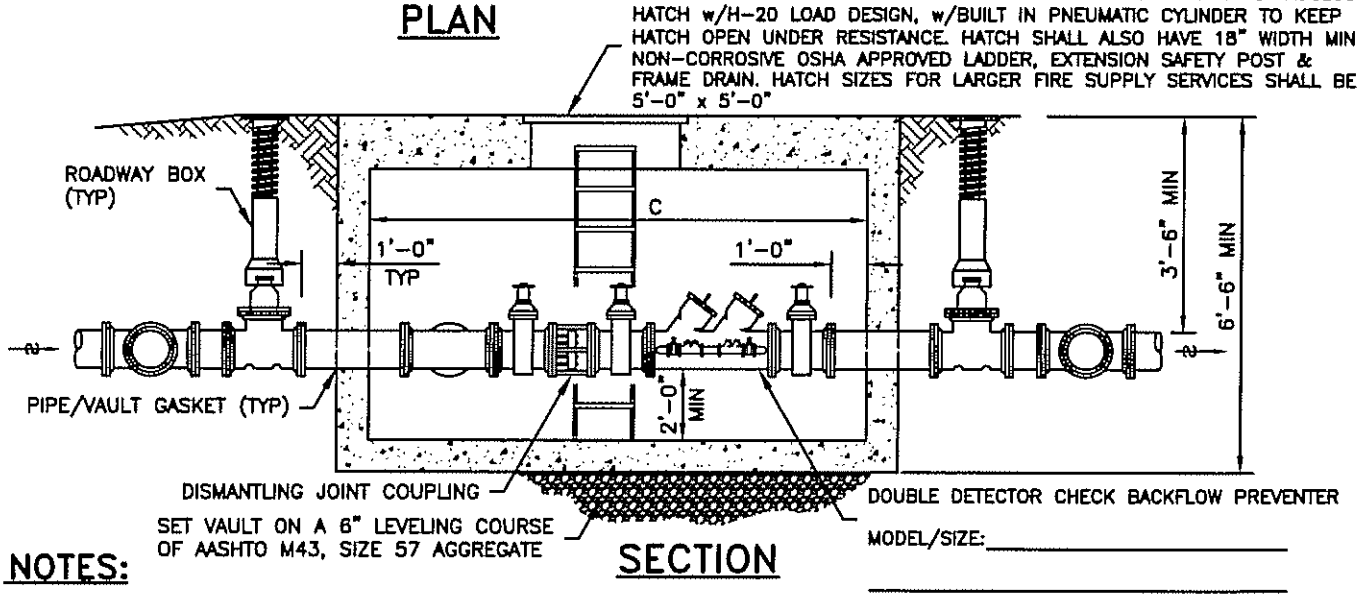

SECTION

NOTES:

1. PERMANENT BRICK, CONCRETE OR APPROVED PRECAST PIPE SUPPORTS (NOT SHOWN) TO BE PLACED UNDER ALL FLANGED FITTINGS AND AS DIRECTED BY THE COUNTY.
2. LOADS: L.L. = AASHTO H-20, D.L. = EARTH @ 110 LBS PER CU FT AND 42 LBS PER CU FT EQUIVALENT FLUID PRESSURE.
3. CONCRETE AND REINFORCING SHALL CONFORM TO STANDARD SPECIFICATIONS.
4. PROVIDE POSITIVE DRAINAGE AWAY FROM VAULT.
5. FOR INTERIOR COMMERCIAL INSTALLATION, A REDUCED PRESSURE BACKFLOW PREVENTION ASSEMBLY WITH DETECTOR ASSEMBLY MAY BE REQUIRED.
6. ALL PIPE WITHIN THE VAULT SHALL BE FLANGED.
7. ALL FLANGES AND METERS SHALL RECEIVE STAINLESS STEEL BOLTS AND BRASS NUTS.
8. ALL FITTINGS TO BE BRASS OR DUCTILE IRON.
9. SUMP SHALL HAVE AN 8" MIN DIA AND A 4" MIN DEPTH.
10. PRIOR TO ORDERING THE METER SETTING AND BACKFLOW PREVENTER, THE CONTRACTOR SHALL SCHEDULE AND HOLD A MEETING WITH THE DIVISION OF WATER AND SEWER MAINTENANCE CHIEF TO DISCUSS THE INSTALLATION REQUIREMENTS.
11. INSTALL DISMANTLING JOINT FOR DOMESTIC 3" AND LARGER.
12. THE EXTERIOR OF THE CONCRETE VAULT SHALL HAVE A FACTORY APPLIED BITUMINOUS COATING.

FIRE SERVICE BACKFLOW PREVENTER SIZE	A	B	C
3"	72	24	96
4"	74	31	108
6"	74	34	126
8"	78	36	138
10"	78	36	156

HARFORD COUNTY, MD
DEPARTMENT OF PUBLIC WORKS

STANDARD WATER DETAILS

CLOSED SYSTEM
DOMESTIC WATER SERVICE
WITH FIRE SUPPLY

ISSUED 07/98
REVISED 11/10/14

PLATE W-24b

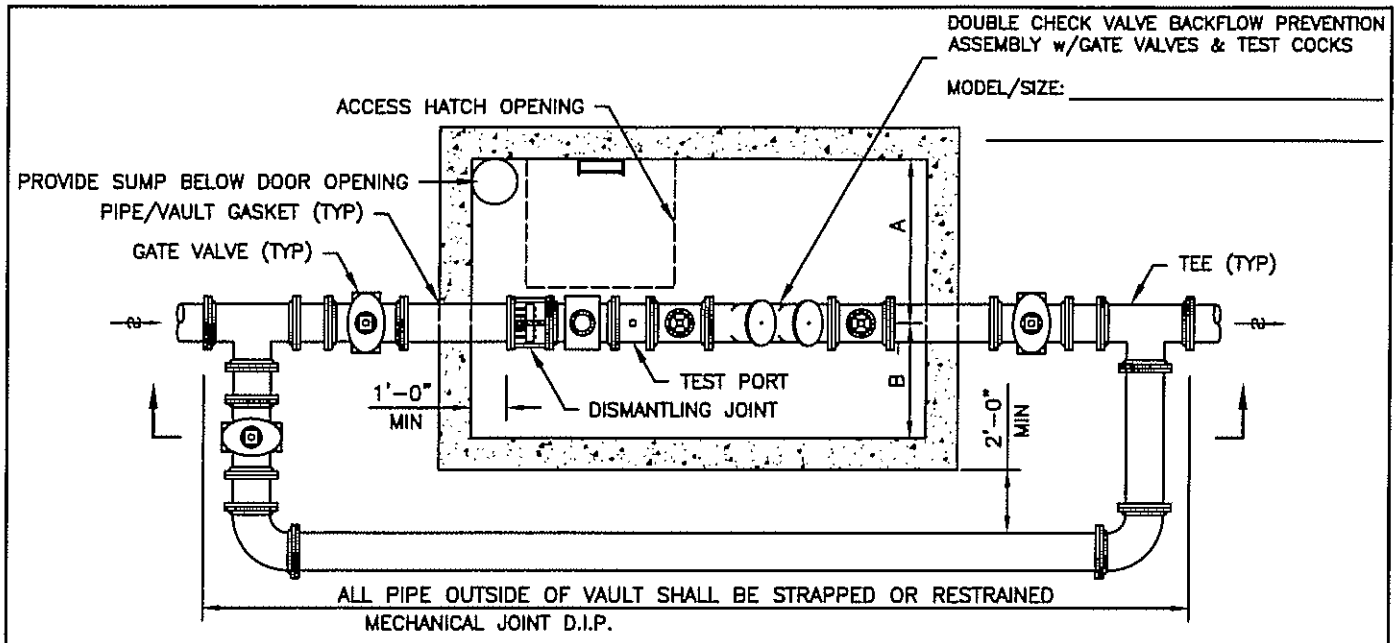

PLAN

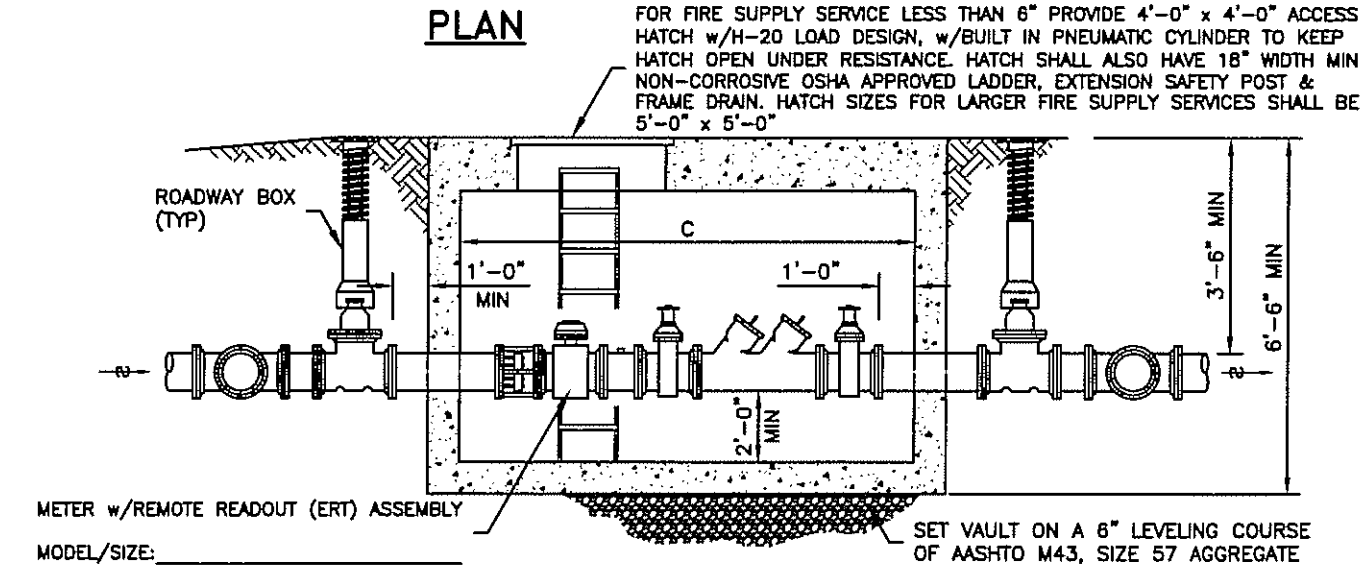

SECTION

NOTES:

1. PERMANENT BRICK, CONCRETE OR APPROVED PRECAST PIPE SUPPORTS (NOT SHOWN) TO BE PLACED UNDER ALL FLANGED FITTINGS AND AS DIRECTED BY THE COUNTY.
2. LOADS: L.L. = AASHTO H-20, D.L. = EARTH @ 110 LBS PER CU FT AND 42 LBS PER CU FT EQUIVALENT FLUID PRESSURE.
3. CONCRETE AND REINFORCING SHALL CONFORM TO STANDARD SPECIFICATIONS.
4. PROVIDE POSITIVE DRAINAGE AWAY FROM VAULT.
5. FOR INTERIOR COMMERCIAL INSTALLATION, A REDUCED PRESSURE BACKFLOW PREVENTION ASSEMBLY MAY BE REQUIRED.
6. ALL PIPE WITHIN THE VAULT SHALL BE FLANGED.
7. ALL FLANGES AND METERS SHALL RECEIVE STAINLESS STEEL BOLTS AND BRASS NUTS.
8. SUMP SHALL HAVE AN 8" MIN DIA AND A 4" MIN DEPTH.
9. PRIOR TO ORDERING THE METER SETTING AND BACKFLOW PREVENTER, THE CONTRACTOR SHALL SCHEDULE AND HOLD A MEETING WITH THE DIVISION OF WATER AND SEWER MAINTENANCE CHIEF TO DISCUSS THE INSTALLATION REQUIREMENTS.
10. THE EXTERIOR OF THE CONCRETE VAULT SHALL HAVE A FACTORY APPLIED BITUMINOUS COATING.

BACKFLOW PREVENTER SIZE	A	B	C
3"	48	30	108
4"	47	37	120
6"	56	40	144
8"	60	42	168
10"	66	42	192
10"x12"	66	42	192

HARFORD COUNTY, MD
DEPARTMENT OF PUBLIC WORKS

STANDARD WATER DETAILS

STANDARD INSTALLATION FOR 3" THRU 10" COMBINED FIRE AND DOMESTIC SERVICE

ISSUED 07/98
REVISED 11/10/14

PLATE W-25

WHEN WATER IS IN:

1. STANDARD FLOW: VALVES Ⓐ & Ⓑ OPEN, Ⓒ & Ⓓ CLOSED.
2. REVERSE FLOW: VALVES Ⓐ & Ⓑ CLOSED, Ⓒ & Ⓓ OPEN.
3. VALVES Ⓔ & Ⓕ NORMALLY OPEN, TO BE CLOSED ONLY FOR SERVICING OF METER.

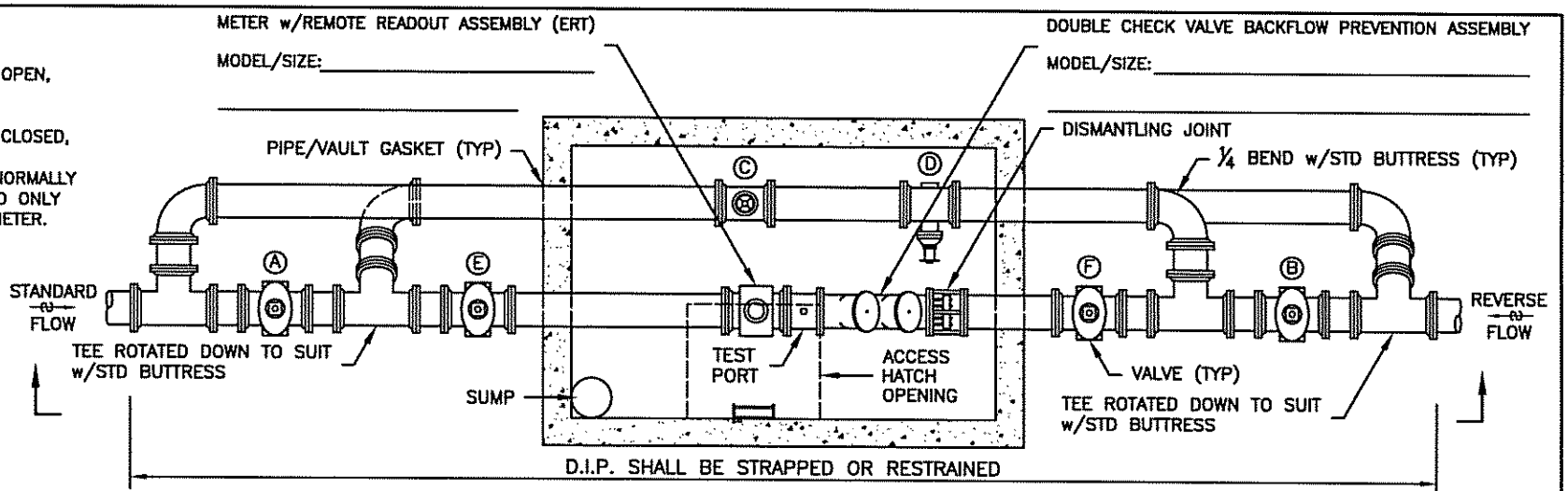

PLAN

FOR FIRE SUPPLY SERVICE LESS THAN 6" PROVIDE 4'-0" x 4'-0" ACCESS HATCH w/H-20 LOAD DESIGN, w/BUILT IN PNEUMATIC CYLINDER TO KEEP HATCH OPEN UNDER RESISTANCE. HATCH SHALL ALSO HAVE 18" WIDTH MIN, NON-CORROSIVE OSHA APPROVED LADDER, EXTENSION SAFETY POST & FRAME DRAIN. HATCH SIZES FOR LARGER FIRE SUPPLY SERVICES SHALL BE 5'-0" x 5'-0"

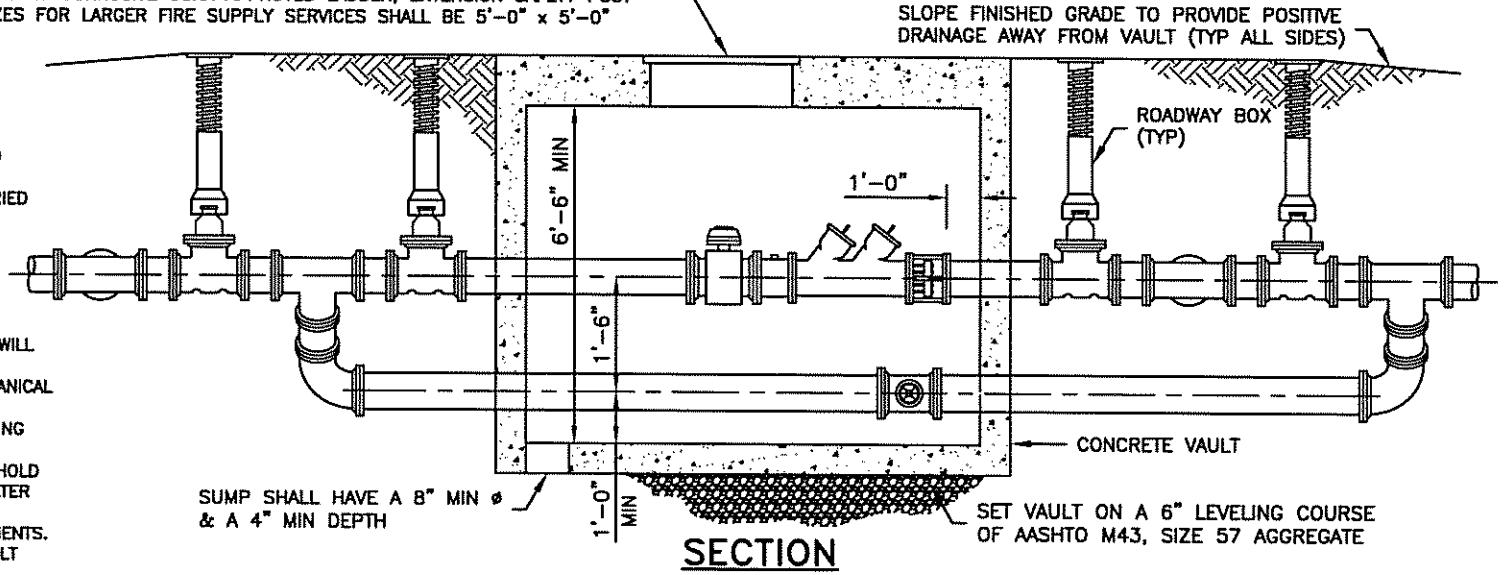

SECTION

NOTES:

1. PERMANENT BRICK, CONCRETE OR APPROVED PRECAST PIPE SUPPORTS (NOT SHOWN) TO BE PLACED UNDER ALL FLANGED FITTINGS AND AS DIRECTED BY THE COUNTY.
2. CONTRACTOR SHALL FURNISH FLANGED SPOOL SAME LENGTH AS METER.
3. INSTALL ROADWAY BOXES ON ALL BURIED VALVES.
4. THIS DETAIL IS FOR INFORMATIONAL PURPOSES ONLY. EACH LOCATION SHALL BE DESIGNED FOR SPECIFIC APPLICATION AS APPROVED BY THE COUNTY.
5. AUTOMATIC CONTROL AND TELEMETRY WILL BE REQUIRED.
6. ALL BURIED FITTINGS SHALL BE MECHANICAL JOINT.
7. PRIOR TO ORDERING THE METER SETTING AND BACKFLOW PREVENTER, THE CONTRACTOR SHALL SCHEDULE AND HOLD A MEETING WITH THE DIVISION OF WATER AND SEWER MAINTENANCE CHIEF TO DISCUSS THE INSTALLATION REQUIREMENTS.
8. THE EXTERIOR OF THE CONCRETE VAULT SHALL HAVE A FACTORY APPLIED BITUMINOUS COATING.

HARFORD COUNTY, MD
DEPARTMENT OF PUBLIC WORKS

STANDARD WATER DETAILS

"CONCEPTUAL"
REVERSE FLOW METER

ISSUED 07/88
REVISED 11/10/14

PLATE W-26

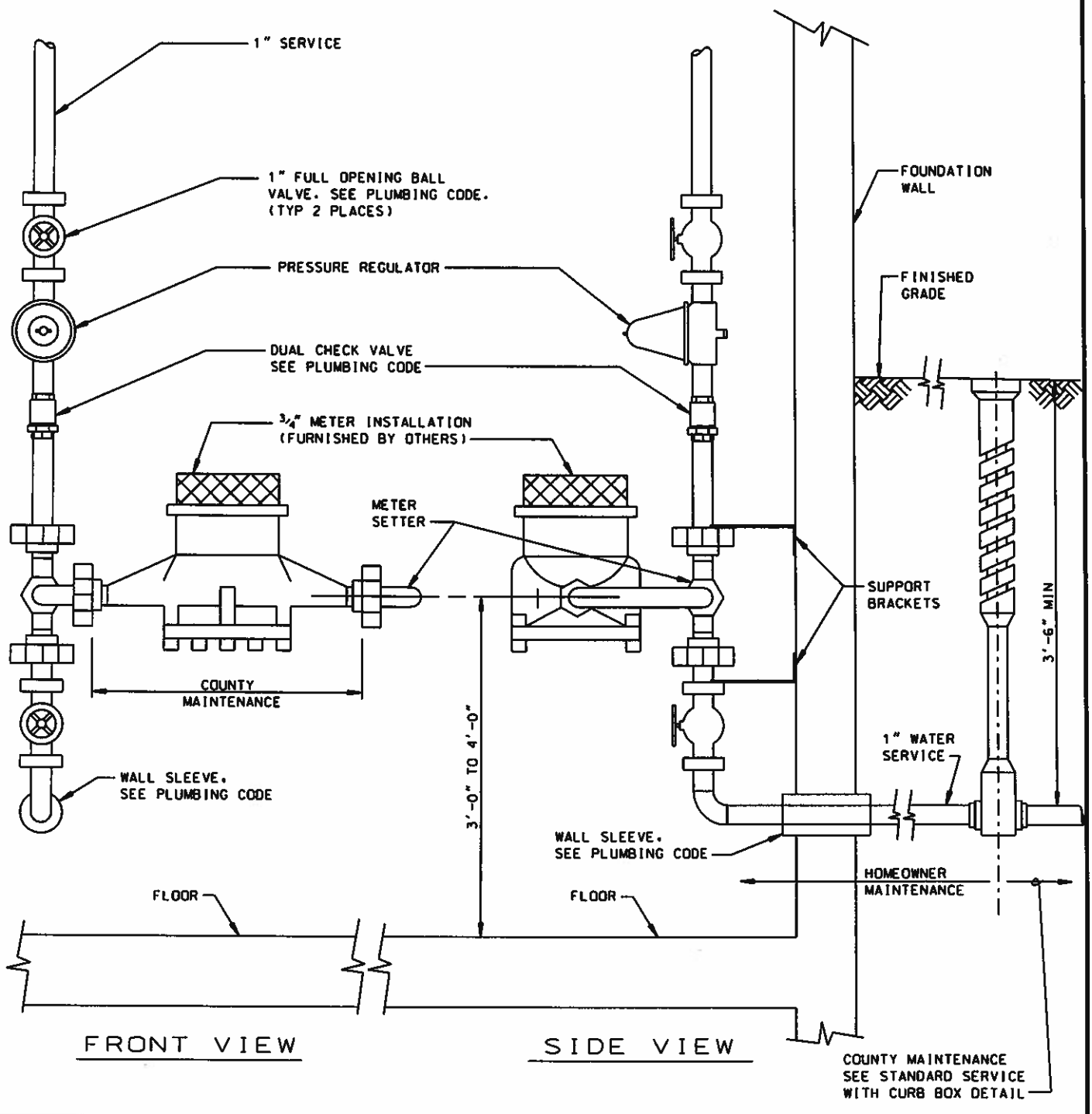

HARFORD COUNTY, MD
DEPARTMENT OF PUBLIC WORKS

Robert B. Cooper

STANDARD WATER DETAILS

INSIDE SETTING
COMBINED DOMESTIC AND SPRINKLER SERVICE
(SINGLE FAMILY AND TOWNHOUSE UNITS)

ISSUED	7/98
REVISED	4/17/01
REVISED	11/26/03
REISSUED	3/15/09

PLATE W-27

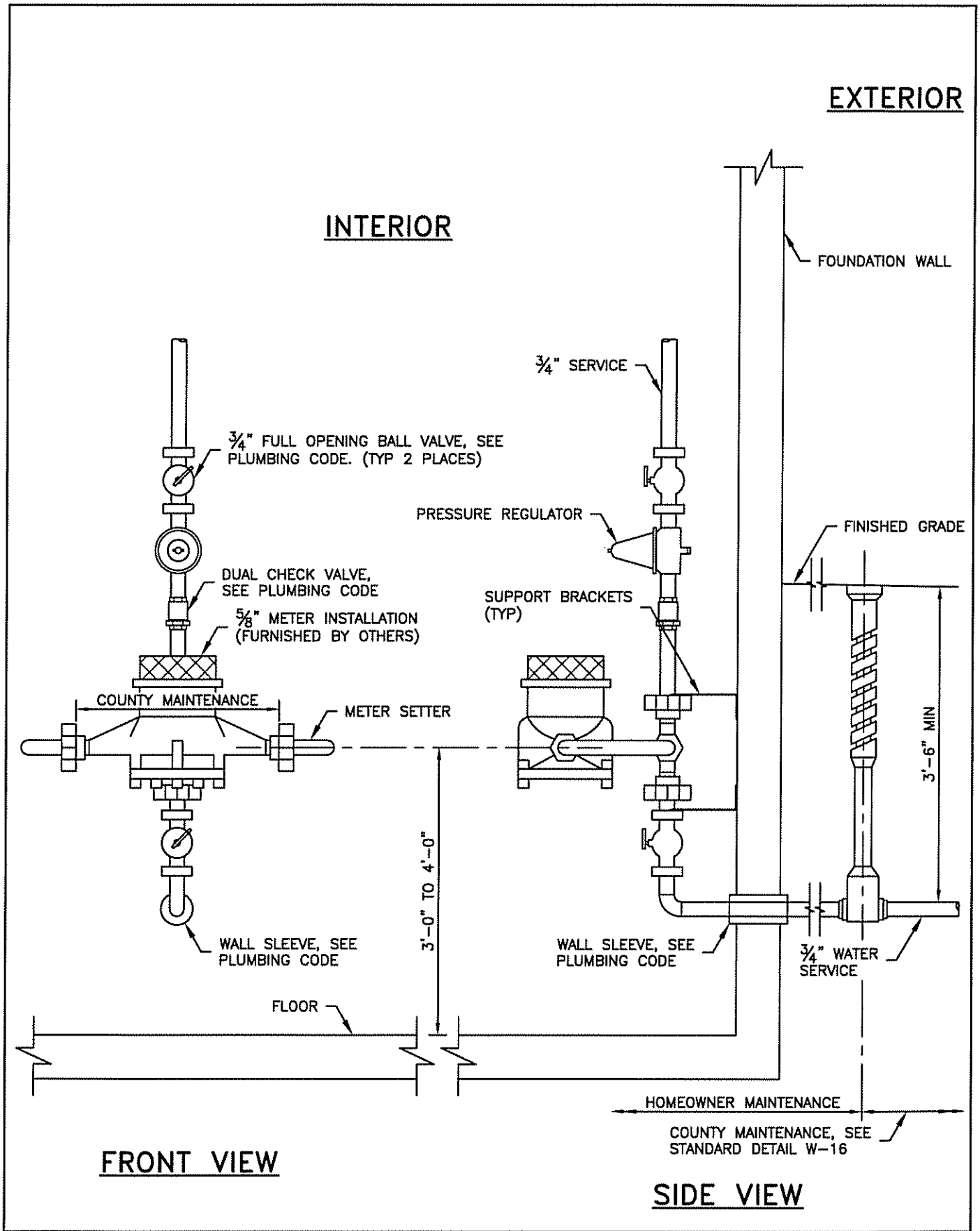

HAREORD COUNTY, MD DEPARTMENT OF PUBLIC WORKS	STANDARD WATER DETAILS INSIDE SETTING DOMESTIC SERVICE (SINGLE FAMILY WITHOUT SPRINKLER)	ISSUED 07/98 REVISED 11/10/14 PLATE W-28

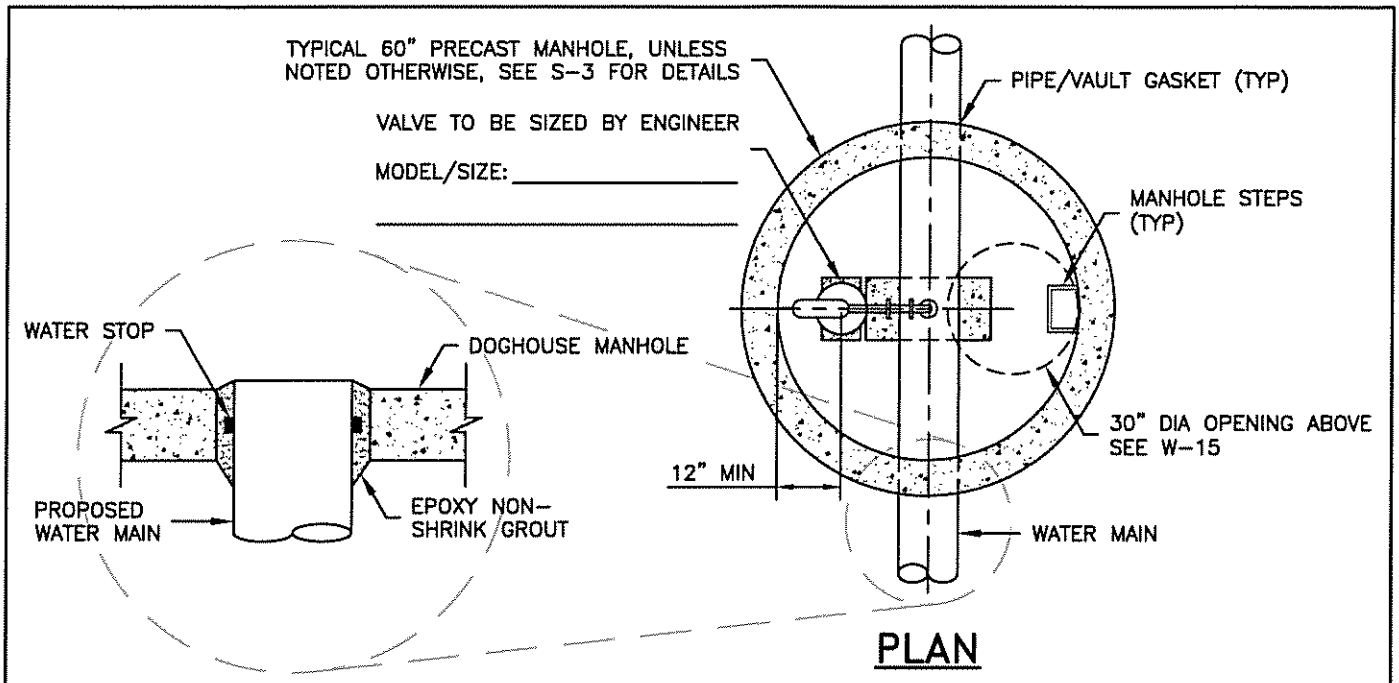

PLAN

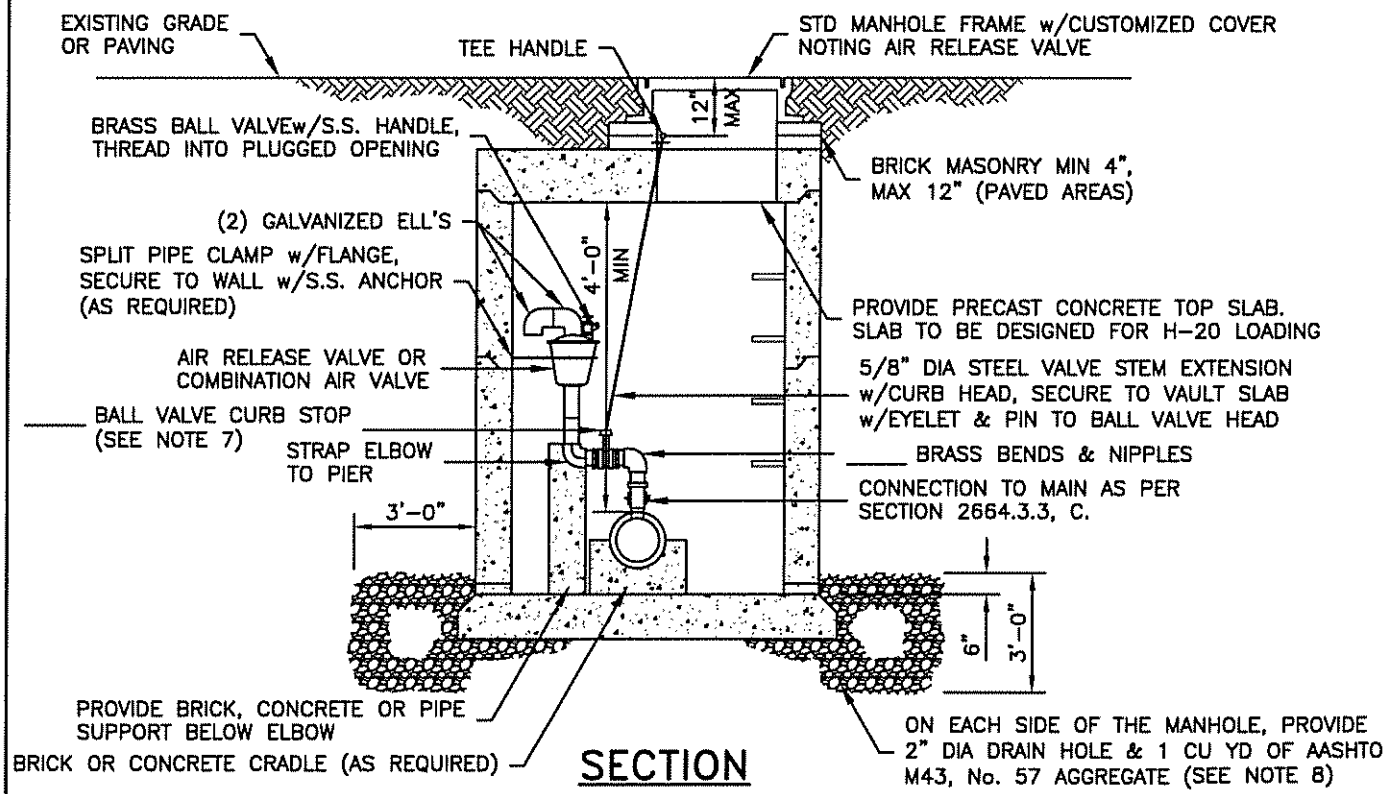

SECTION

NOTES:

1. ALL FITTINGS BELOW AIR VALVE TO BE HEAVY DUTY THREADED, UNPOLISHED BRASS UNLESS NOTED OTHERWISE.
2. PIPE TAP AND ANGLE VALVE TO BE SIZED BY ENGINEER.
3. SET MANHOLE ON 6" LEVELING COURSE OF AASHTO M43, No. 57 AGGREGATE.
4. VAULTS IN HIGH WATER TABLE AREAS SHALL BE MODIFIED AS REQUIRED BY THE COUNTY.
5. CONTRACTOR MAY USE PRECAST DOGHOUSE TYPE MANHOLE RISER SECTION WITH CAST-IN-PLACE BASE AND SEALED OPENINGS PER INSET.
6. MINIMUM VAULT HEIGHT SHALL BE 6'-6" MEASURED FROM FLOOR TO CEILING.
7. AN ACCEPTABLE ALTERNATIVE TO THE 90° BEND AND BALL VALVE CURB STOP IS AN ANGLE BALL SERVICE VALVE.
8. THE DRAIN HOLES AND GRAVEL SHALL NOT BE INSTALLED IF GROUNWATER IS ENCOUNTERED DURING CONSTRUCTION.

HARFORD COUNTY, MD DEPARTMENT OF PUBLIC WORKS	STANDARD WATER DETAILS AIR RELEASE VALVE OR COMBINATION AIR VALVE AND VAULT	ISSUED 07/98 REVISED 11/10/14 PLATE W-29

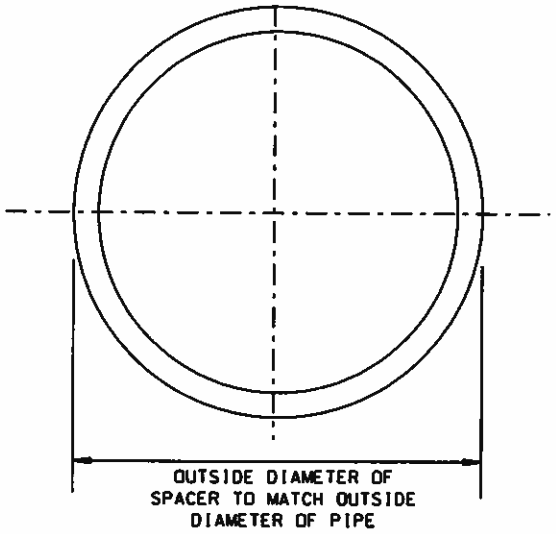

SECTION

NO SCALE

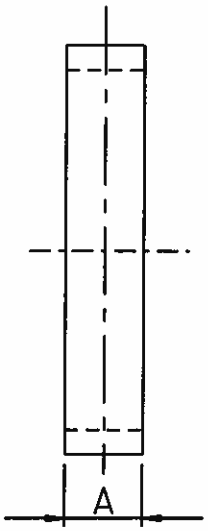

ELEVATION

NO SCALE

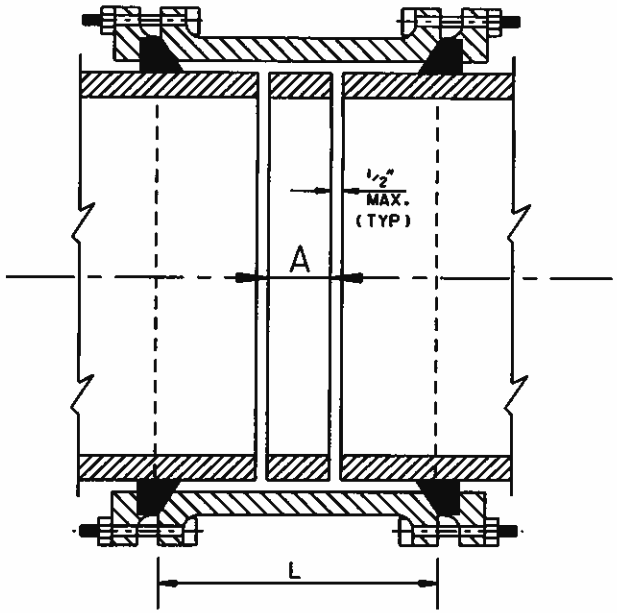

METHOD OF INSTALLATION

NO SCALE

SPACER DETAIL

SIZE	A(MAX)	L(MIN)
6"	3.25"	12"
8"	3.75"	12"
10"	3.75"	12"
12"	3.75"	12"
16"	3.75"	15"
20"	3.75"	15"
24"	3.75"	15"
30"	4.25"	24"
36"	4.25"	24"

NOTES:

1. SPACER SHALL BE INSTALLED IN ALL CASES WHERE ENDS OF PIPE DO NOT ABUT.
2. ALL SLEEVES SHALL BE LONG PATTERN.

HARFORD COUNTY, MD
DEPARTMENT OF
PUBLIC WORKS
Robert B. Cooper

STANDARD WATER DETAILS

MECHANICAL JOINT SOLID SLEEVE AND SPACER

ISSUED 7/1/98
REVISED
REISSUED 3/15/09

PLATE W-30

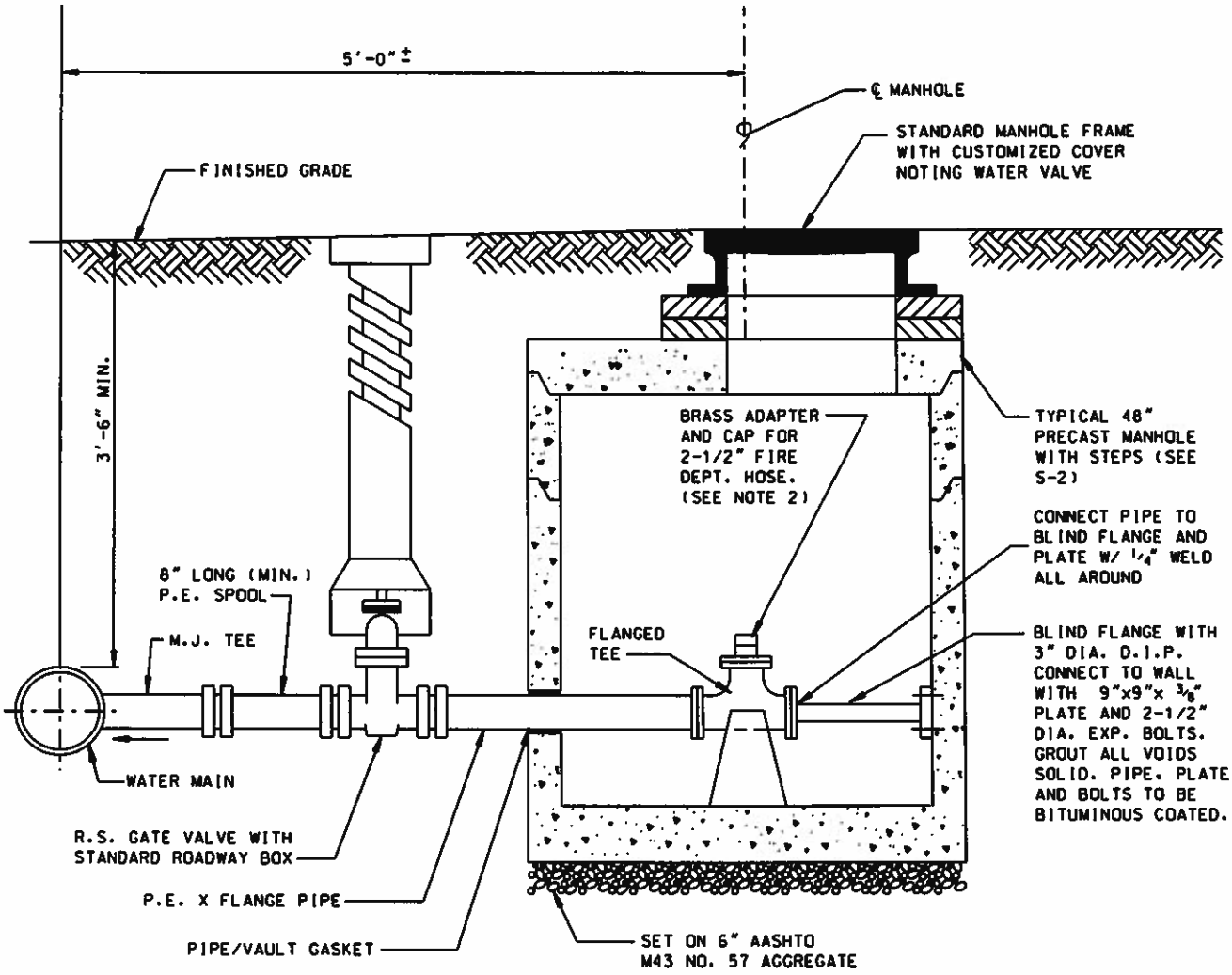

SECTION

NO SCALE

NOTES:

1. ALL PIPING SHALL BE STRAPPED OR RESTRAINED DUCTILE IRON PIPE.
2. HOSE CONNECTION AND CAP THREADS SHALL CONFORM TO ANSI SPECIFICATIONS B26 FOR "NATIONAL (AMERICAN) STANDARD FIRE-HOSE COUPLING SCREW THREAD."
3. MINIMUM VAULT HEIGHT SHALL BE 6'-6" FROM FLOOR TO CEILING.
4. ALL PIPING FROM THE MAIN SHALL BE 6" DIA.
5. ALL JOINTS SHALL BE MECHANICALLY RESTRAINED.

HARFORD COUNTY, MD
DEPARTMENT OF
PUBLIC WORKS

STANDARD WATER DETAILS

TRANSMISSION LINE
DEWATERING/BLOWOFF

ISSUED 7/98
REVISED 11/26/03
REVISED 3/15/09

PLATE W-31

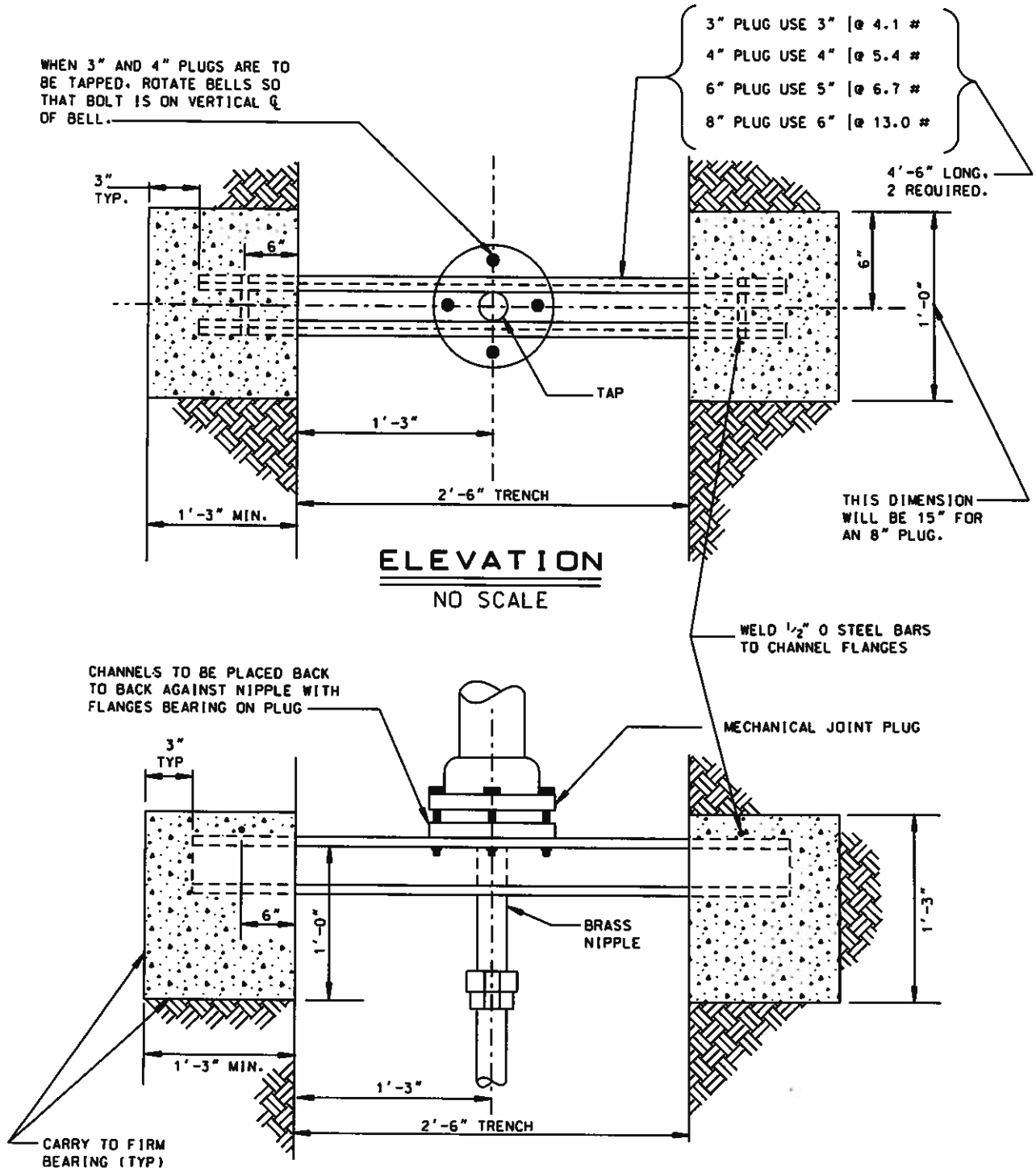

ELEVATION

NO SCALE

PLAN

NO SCALE

NOTES:

1. ALL CONCRETE TO BE MIX NO.2.
2. PAINT EXPOSED PARTS OF CHANNELS WITH AN APPROVED BITUMINOUS COATING.

HARFORD COUNTY, MD
DEPARTMENT OF PUBLIC WORKS

STANDARD WATER DETAILS

METHOD OF BLOCKING PLUGS WHICH WILL BE TAPPED

ISSUED 7/1/98
REVISED
REISSUED 3/15/09

PLATE W-32

LEGEND

W = O.D. + 2 E

E = 9" FOR 6" TO 24" PIPES

E = 12" FOR 27" TO 36" PIPES

E = 15" FOR 42" TO 72" PIPES

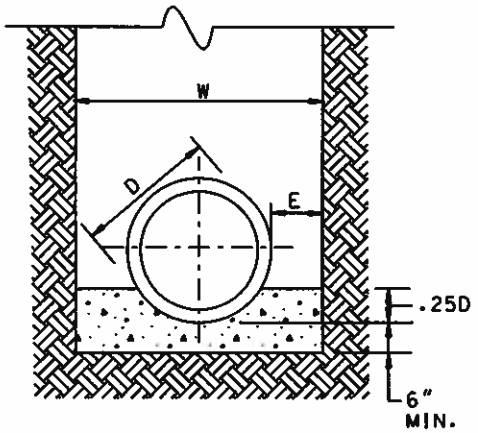

CONCRETE LOW CRADLE

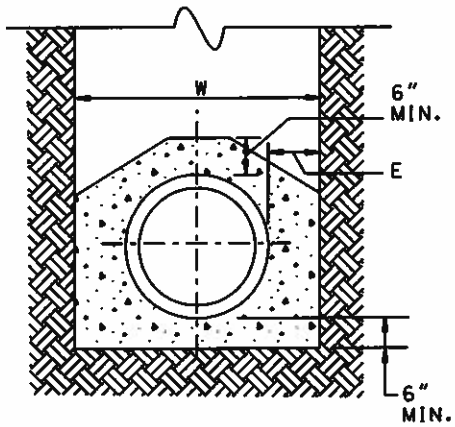

CONCRETE ENCASEMENT

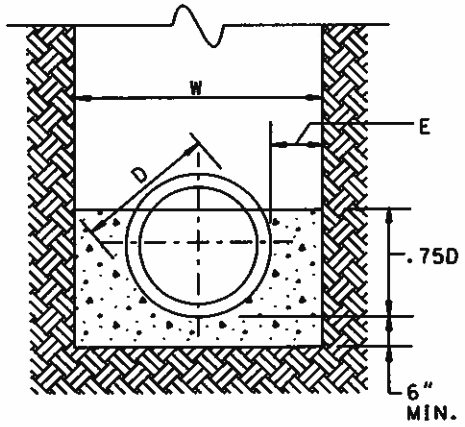

CONCRETE HIGH CRADLE

HARFORD COUNTY, MD
DEPARTMENT OF
PUBLIC WORKS

Robert B. Cooper

STANDARD WATER DETAILS

CONCRETE ENCASEMENT
AND CRADLES

ISSUED 7/1/98
REVISED
REISSUED 3/15/09

PLATE W-33

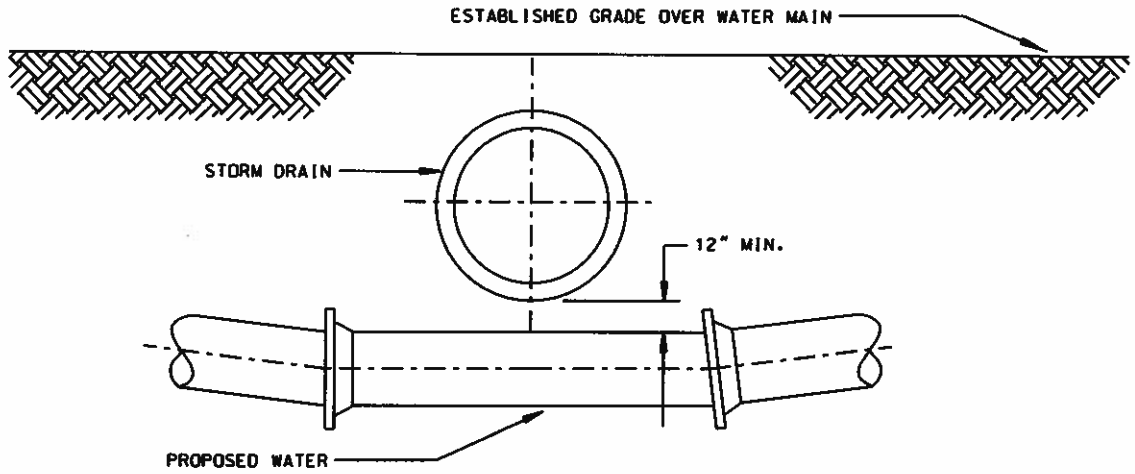

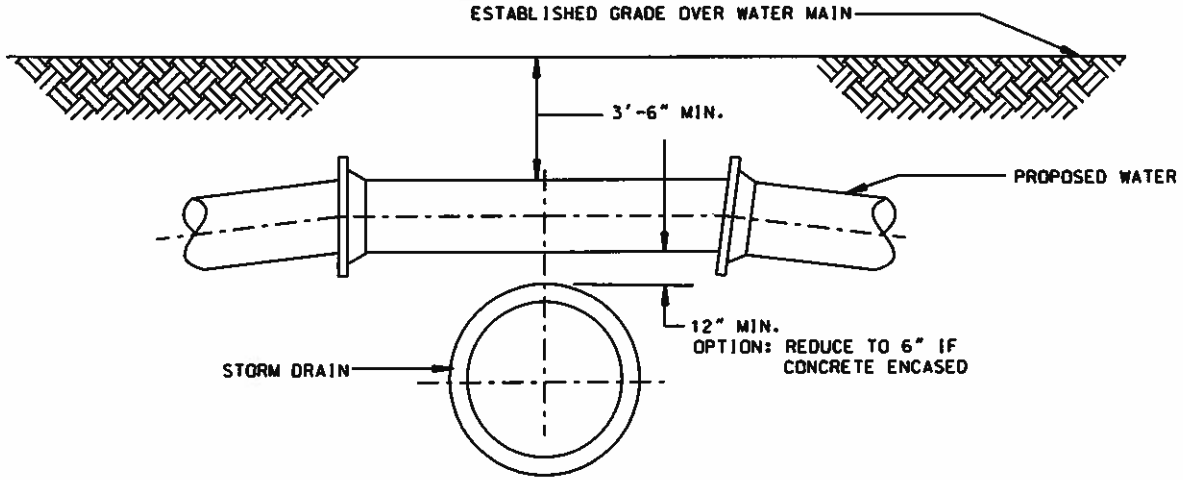

HARFORD COUNTY, MD
DEPARTMENT OF
PUBLIC WORKS

Robert B. Cooper

STANDARD WATER DETAILS

WATER MAIN CROSSING
STORM DRAIN

ISSUED 7/1/98
REVISED
REISSUED 3/15/09

PLATE W-34

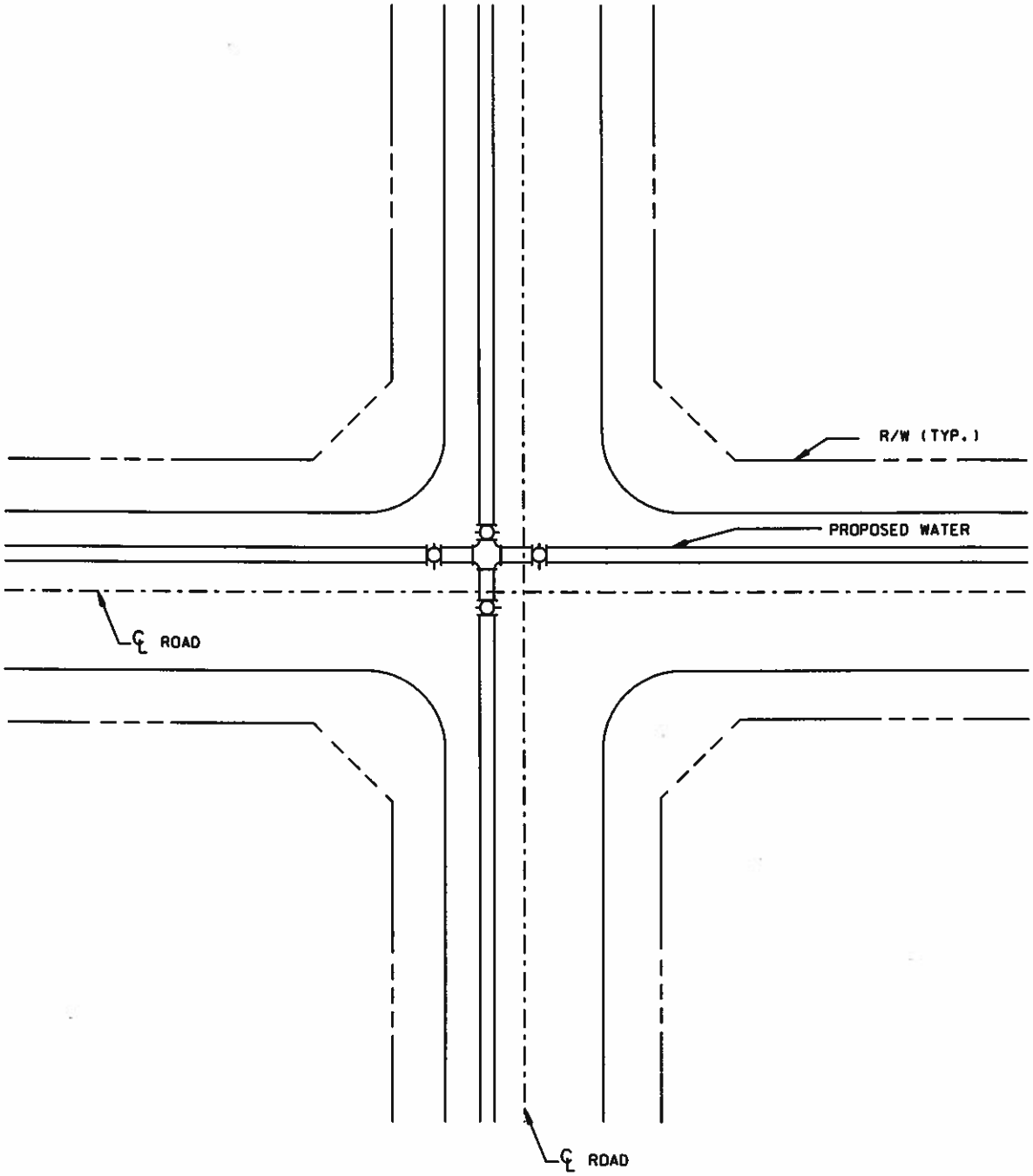

NOTES:

1. ONLY ONE VALVE MAY BE STRAPPED DIRECTLY TO A BRANCH FITTING. ADDITIONAL VALVES, IF REQUIRED, SHALL BE INSTALLED 10' FROM CROSS OR TEE.
2. THERE SHALL BE NO JOINTS BETWEEN THE CROSS/TEE AND VALVE.

HARFORD COUNTY, MD
DEPARTMENT OF
PUBLIC WORKS
Robert B. Cooper

STANDARD WATER DETAILS

WATER VALVE LOCATION IN INTERSECTIONS

ISSUED 7/1/98
REVISED
REVISED 3/15/09

PLATE W-35

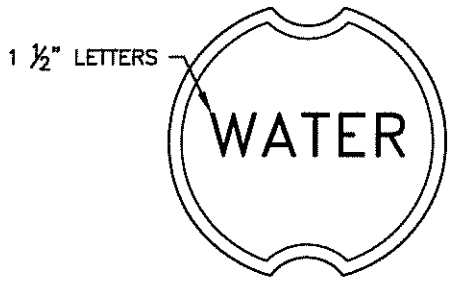

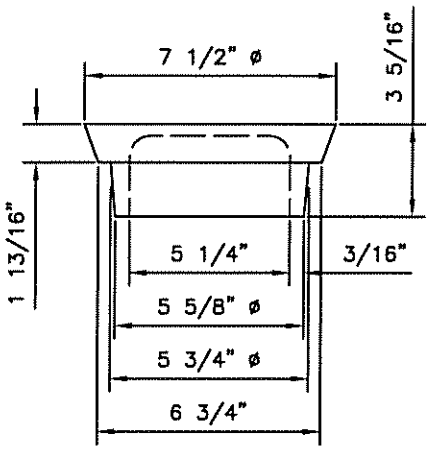

LID

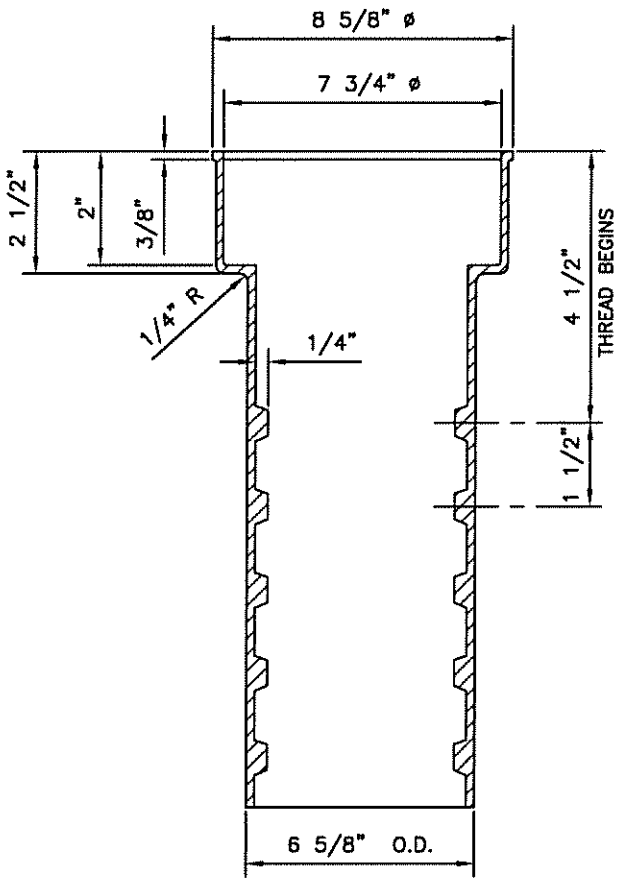

TOP SECTION

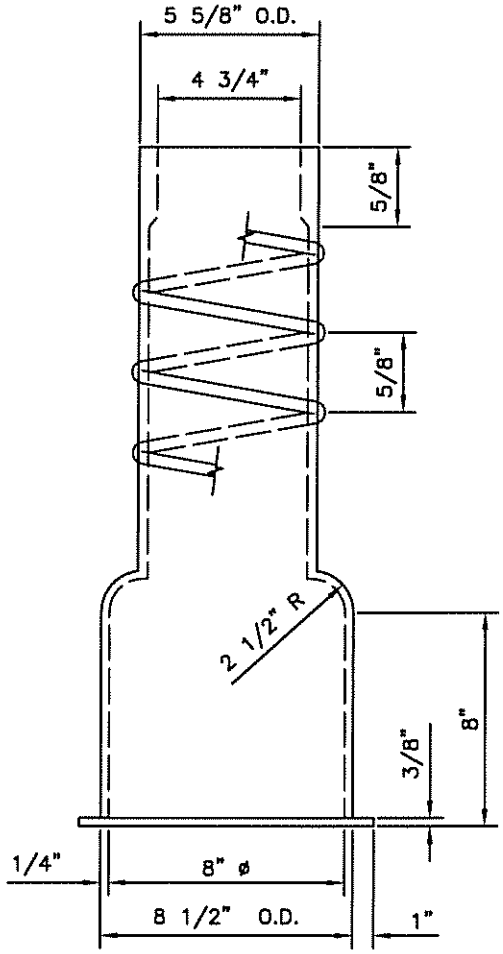

BOTTOM PROFILE

NOTES:

1. GRAY IRON SHALL CONFORM TO ASTM A48, CLASS 30 MIN.
2. THE MANUFACTURER IDENTIFICATION AND COUNTRY OF ORIGIN SHALL BE CAST INTO ALL PARTS.
3. SUPPORT VALVE BOX WITH TWO BRICKS LAID PARALLEL TO VALVE BONNETT.

HARFORD COUNTY, MD DEPARTMENT OF PUBLIC WORKS	STANDARD WATER DETAILS	ISSUED 07/98 REVISED 11/10/14
	5 ¼" VALVE BOX	PLATE W-36

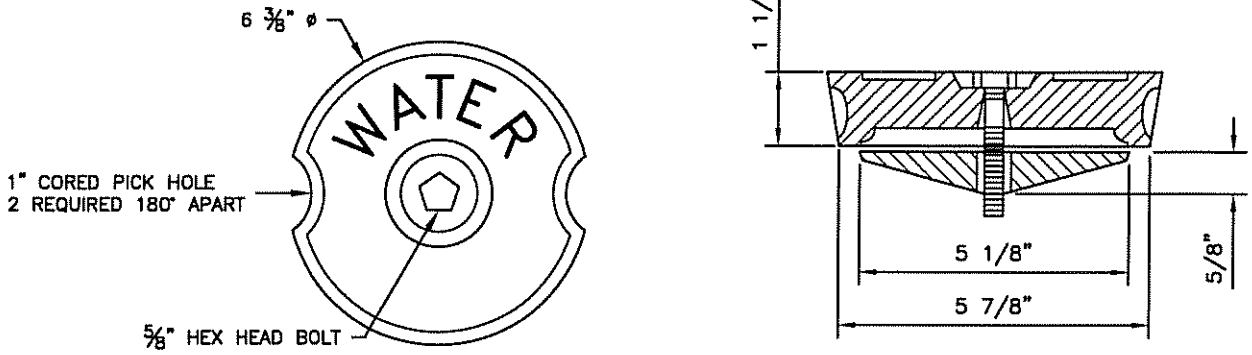

LID

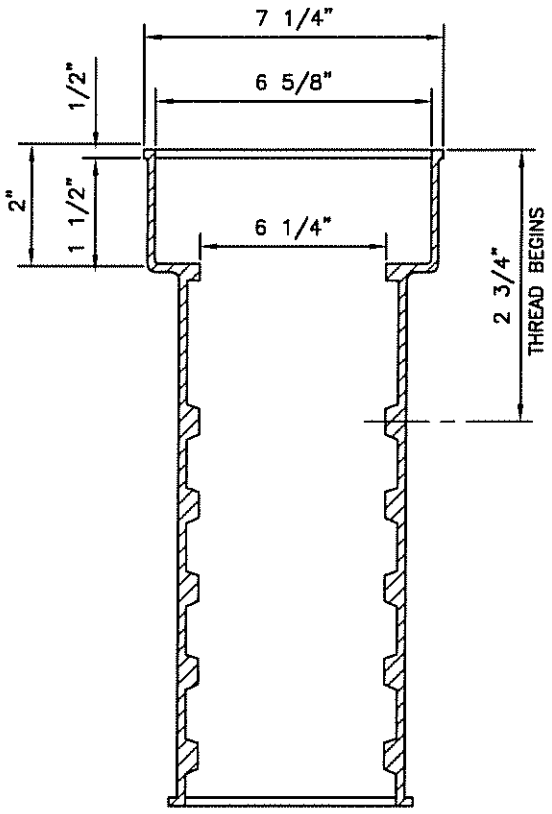

TOP SECTION

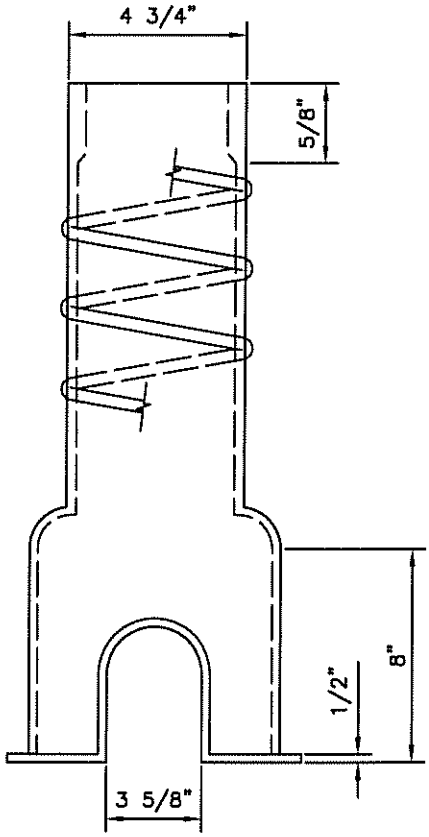

BOTTOM PROFILE

NOTES:

1. GRAY IRON SHALL CONFORM TO ASTM A48, CLASS 30 MIN.
2. THE MANUFACTURER IDENTIFICATION AND COUNTRY (IF OTHER THAN U.S.) OF ORIGIN SHALL BE CAST INTO ALL PARTS.
3. SUPPORT VALVE BOX WITH TWO BRICKS LAID PARALLEL TO VALVE BONNETT.

HARFORD COUNTY, MD DEPARTMENT OF PUBLIC WORKS	STANDARD WATER DETAILS 4 ¼" CURB BOX WITH LOCK LID	ISSUED 07/98 REVISED 11/10/14 PLATE W-37

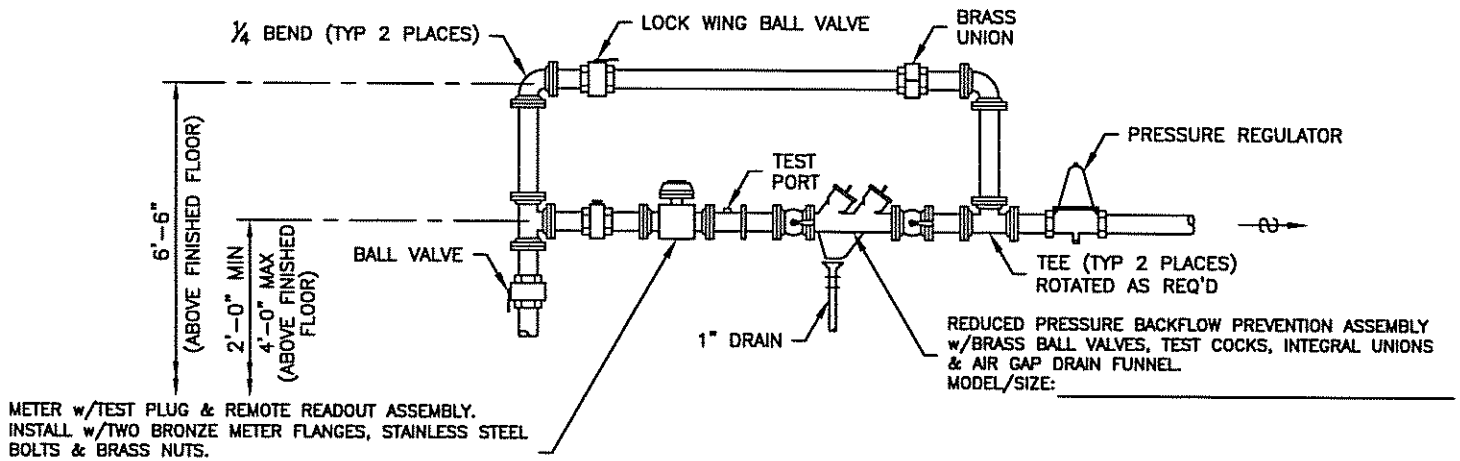

ELEVATION

NOTES:

1. PRIOR TO ORDERING THE METER SETTING AND BACKFLOW PREVENTER, THE CONTRACTOR SHALL SCHEDULE AND HOLD A MEETING WITH THE DIVISION OF WATER AND SEWER MAINTENANCE CHIEF TO DISCUSS THE INSTALLATION REQUIREMENTS.
2. INSTALL CORROSIVE RESISTANT WELDED CANTILEVERED WALL BRACKETS AS REQUIRED BY HARFORD COUNTY TO SUPPORT THE EQUIPMENT AND PIPING.
3. TYPE 'K' COPPER TUBING SHALL BE CONTINUOUS TO THE BALL VALVE.
4. BYPASS PIPING SHALL BE THREADED BRASS.
5. ALL FITTINGS AND NIPPLES SHALL BE BRASS WITH APPROPRIATE ADAPTERS.
6. ALL COMPONENTS SHALL BE LEAD FREE.

HARFORD COUNTY, MD
DEPARTMENT OF PUBLIC WORKS

STANDARD WATER DETAILS

SEWAGE PUMPING STATION WATER METER
WITH BACKFLOW PREVENTER

ISSUED 11/10/14
REVISED

PLATE W-38

STANDARD SEWER DETAILS
TABLE OF CONTENTS

	DESCRIPTION	ISSUED
S1	- Pipe Bedding	7/1/98
S2	- 48" Precast Manhole for 21" Pipe and Smaller	4/17/01
S3	- 60" Precast Manhole for 24" to 30"Pipe	3/15/09
S3a	- 72" and Larger Manholes for 36" Pipe and Larger	11/10/14
S4	- Round Shallow Manhole Brick Construction	4/17/01
S5	- Square Shallow Manhole Brick Construction	4/17/01
S6	- Offset Manhole	4/17/01
S7	- Terminal Manhole	4/17/01
S8	- Manhole Top Above Finished Grade	3/15/09
S9	- Built-in-Place Main Drop at Manhole Type "A" and "B"	1/15/10
S10	- 48" Manhole with Precast Collars for Main Drop Connection (8" Diameter Pipe)	1/15/10
S11	- NOT USED	DELETED
S12	- Method of Connection to Existing Manhole	3/15/09
S13	- Plans for Manhole Channeling	7/1/98
S14	- Standard Frame and Cover	3/15/09
S15	- Locking Frame and Cover; Non-Watertight	3/15/09
S16	- Watertight Manhole Frame and Cover	11/10/14
S17	- Watertight Manhole Frame and Cover	11/10/14
S18	- Metal Step	7/1/98
S19	- Plastic Step	7/1/98
S20	- House Service Connection at Main	3/15/09
S21	- PVC Drop House Service Connection at Main	1/15/10

STANDARD SEWER DETAILS
TABLE OF CONTENTS *(Continued)*

DESCRIPTION	ISSUED
S21A - Ductile Iron Drop House Service Connection at Main	NEW
S22 - House Service Connection Clean-out	1/15/10
S23 - Concrete Anchors	4/17/01
S24 - Lamphole	1/15/10
S25 - Sewage Combination Air Valve in Manhole	5/11/06
S26 - Pump Around	3/15/09
S27 - Precast Manhole Setting within 5 LF of Face of Curb	4/17/01
S28 - Sanitary Cleanout in Paving	1/15/10
S29 - Force Main Discharge Manhole (4" Diameter Pipe and Greater)	11/10/14
S30 - Manhole Vent	3/15/09
S31 - Abandonment of Pipe at Manhole	3/15/09
S32 - Complete Manhole Abandonment	3/15/09
S33 - Manhole Channel Detail (Sewer Slope > 2.5%)	3/15/09
S34 - Brick Manhole Conversion to Precast Concrete	3/15/09

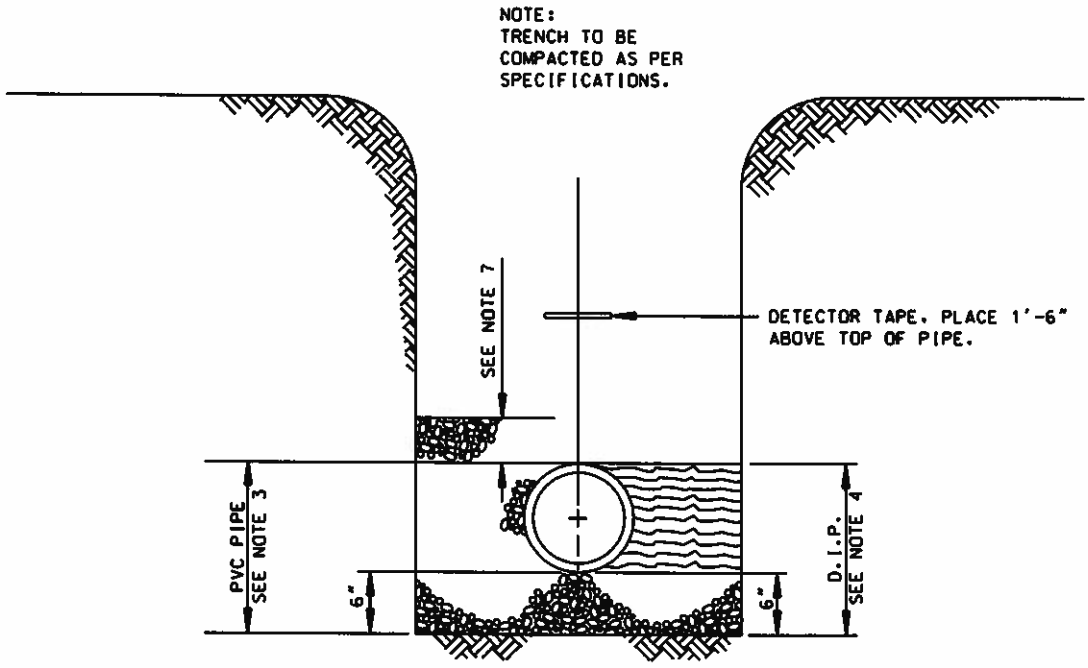

SECTION

NO SCALE

NOTES:

1. UNLESS NOTED OTHERWISE, ALL ROAD REPAIR SHALL BE DONE IN ACCORDANCE WITH THE LATEST REVISION OF THE HARFORD COUNTY OR MARYLAND STATE ROAD CODE.
2. ALL PIPE SHALL BE INSTALLED IN ACCORDANCE WITH THE RECOMMENDATIONS OF THE PIPE MANUFACTURER AND COUNTY APPROVAL.
3. PVC PIPE: SHALL RECEIVE AASHTO M43, NO.57 AGGREGATE.
4. D.I. PIPE: SHALL BE INSTALLED ON 6" AASHTO M43, NO.57 AGGREGATE AND HAVE APPROVED COMPACTED BACKFILL MATERIAL CONSOLIDATED TO TOP OF PIPE.
5. SANITARY FORCE MAINS SHALL BE INSTALLED AS PER STANDARD DETAIL, W-1.
6. PROVIDE CONTINUOUS BEARING FOR FULL LENGTH OF PIPE.
7. AGGREGATE SHALL CONTINUE TO 6" ABOVE TOP OF PIPE WHEN USING P.V.C. WITH DEPTH OF COVER GREATER THAN 14'.

HARFORD COUNTY, MD
DEPARTMENT OF
PUBLIC WORKS
Robert B. Cooper

STANDARD SEWER DETAILS

PIPE BEDDING

ISSUED 7/1/98
REVISED
REISSUED 3/15/09

PLATE S-1

NOTES:

1. EXCEPT AS NOTED, MANHOLE TAPERS, RISERS, AND BASES SHALL BE FURNISHED IN STRICT ACCORDANCE WITH ASTM DESIGNATION C478 (LATEST) FOR "PRECAST REINFORCED CONCRETE MANHOLE SECTIONS".
2. CONCRETE FOR PRECAST CONSTRUCTION SHALL BE 4,000 PSI. MIN
3. REINFORCING FOR TYPE A-3, SAME AS TYPE A-2.
4. MANHOLE STEPS SHALL BE SPACED AS SHOWN IN A SINGLE VERTICAL ALIGNMENT. THE STEPS SHALL NOT BE STAGGERED.
5. TOP OF BENCH TO MATCH CROWN OF PIPE.
6. NO INTERIOR SURFACES SHALL RECEIVE PARGING WITHOUT COUNTY APPROVAL.
7. GRADE RINGS SHALL BE SET ON A FULL BED OF MORTAR.

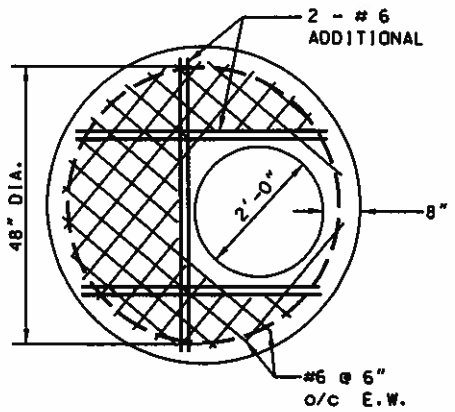

SLAB REINFORCING FOR TYPE A-3 PRECAST MANHOLE

PIPE SIZE	BASE UNIT LENGTH-MIN.	MIN. H FOR A-2 MAX H FOR A-3
8"	2' - 0"	5' - 0"
12" TO 15" DIA.	3' - 0"	6' - 0"
18" TO 21" DIA.	4' - 0"	7' - 0"

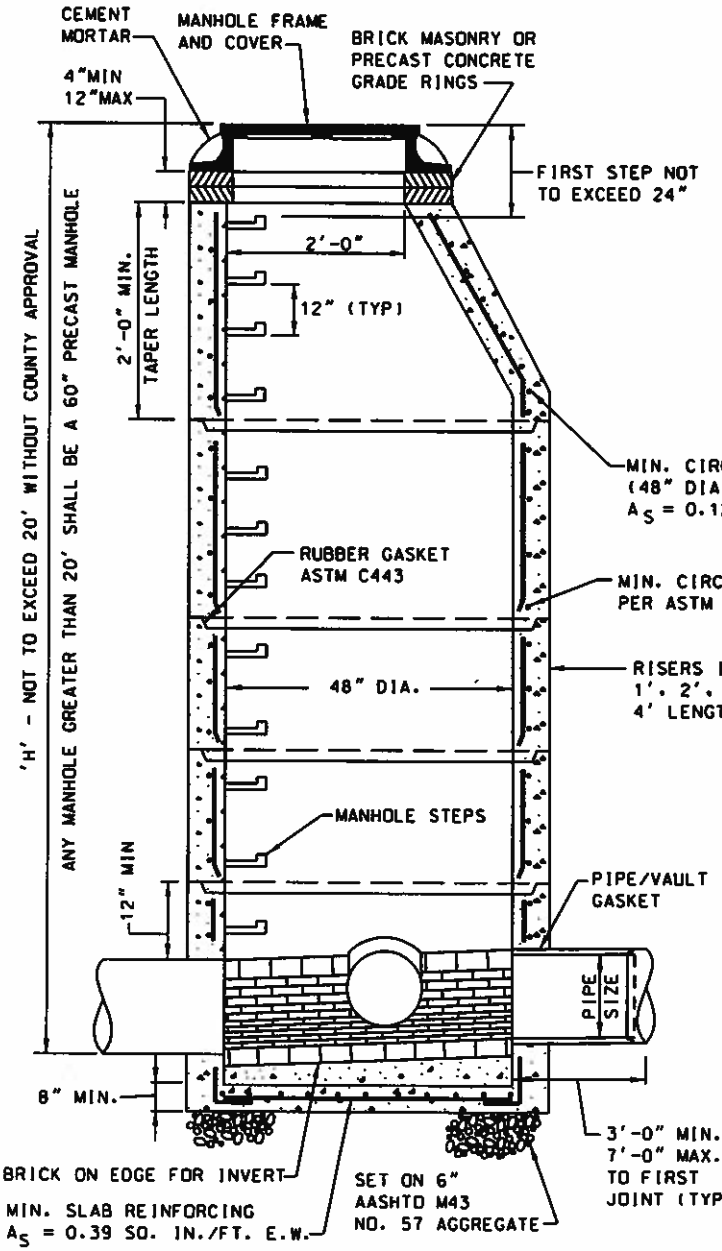

48" TYPE A-2

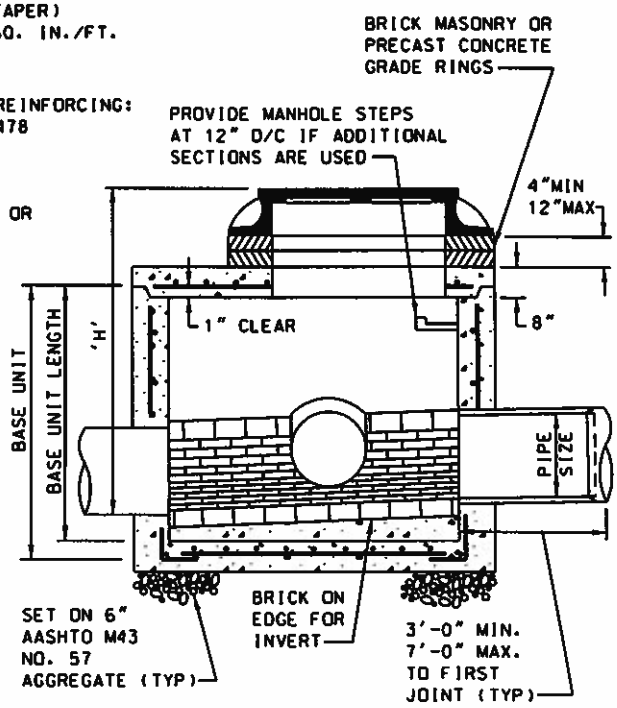

SHALLOW PRECAST MANHOLE 48" TYPE A-3

HARFORD COUNTY, MD
DEPARTMENT OF PUBLIC WORKS
Robert B. Cowen

STANDARD SEWER DETAILS

48" PRECAST MANHOLE FOR 21" PIPE AND SMALLER

ISSUED 7/98
REVISED 4/17/01
REISSUED 3/15/09

PLATE S-2

NOTES:

1. EXCEPT AS NOTED, MANHOLE TAPERS, RISERS, AND BASES SHALL BE FURNISHED IN STRICT ACCORDANCE WITH ASTM DESIGNATION C478 (LATEST) FOR "PRECAST REINFORCED CONCRETE MANHOLE SECTIONS".
2. CONCRETE FOR PRECAST CONSTRUCTION SHALL BE 4,000 PSI. MIN
3. REINFORCING FOR TYPE A-3, SAME AS TYPE A-2.
4. MANHOLE STEPS SHALL BE SPACED AS SHOWN IN A SINGLE VERTICAL ALIGNMENT. THE STEPS SHALL NOT BE STAGGERED.
5. TOP OF BENCH TO MATCH CROWN OF PIPE.
6. NO INTERIOR SURFACES SHALL RECEIVE PARGING WITHOUT COUNTY APPROVAL.
7. GRADE RINGS SHALL BE SET IN A FULL BED OF MORTAR.

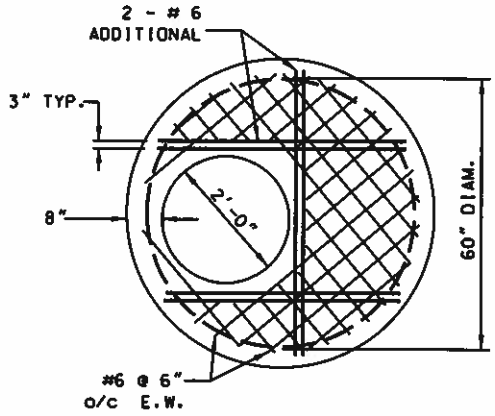

SLAB REINFORCING FOR TYPE A-3 PRECAST MANHOLE

PIPE SIZE	BASE UNIT HEIGHT-MIN.	MIN. H FOR A-2 MAX H FOR A-3
24" DIA.	4' - 0"	7' - 6"
30" DIA.	5' - 0"	8' - 6"

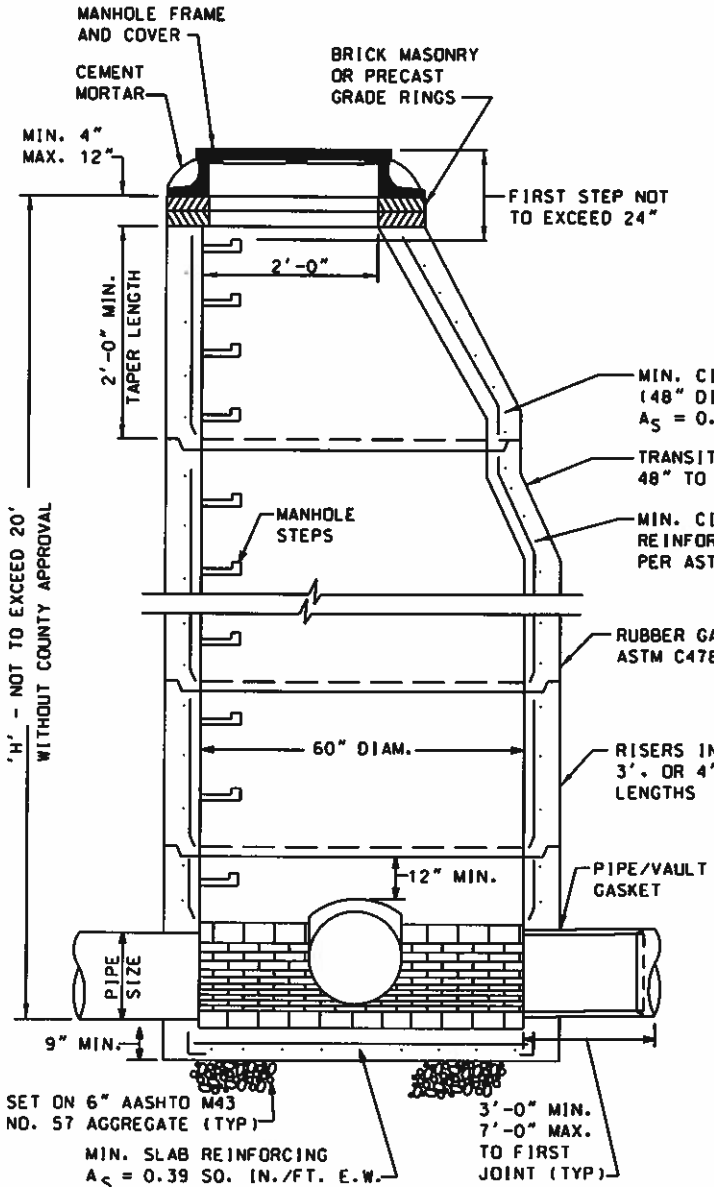

60" TYPE A-2

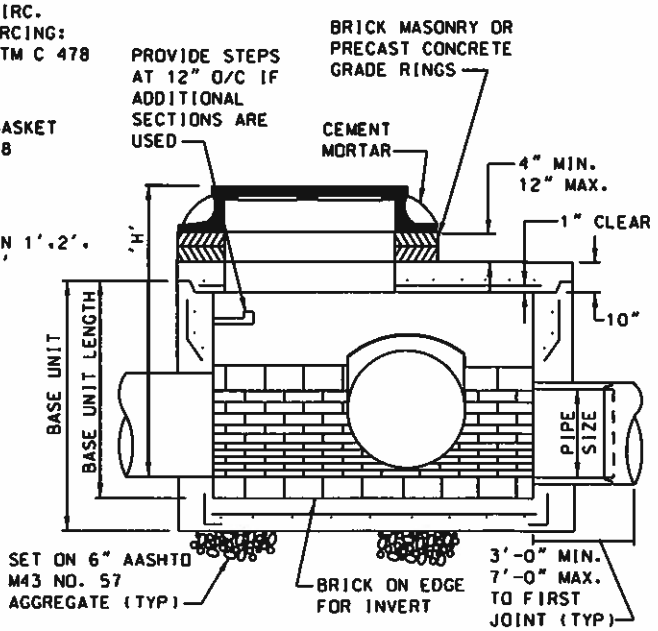

SHALLOW PRECAST MANHOLE 60" TYPE A-3

HARFORD COUNTY, MD
DEPARTMENT OF PUBLIC WORKS

Robert B. Cooper

STANDARD SEWER DETAILS

60" PRECAST MANHOLE FOR 24" TO 30" PIPE

ISSUED	7/98
REVISED	4/17/01
REVISED	3/15/09
REVISED	4/16/10
PLATE	S-3

...\s-03 updated 7_13_10.dgn 7/13/2010 10:19:29 AM

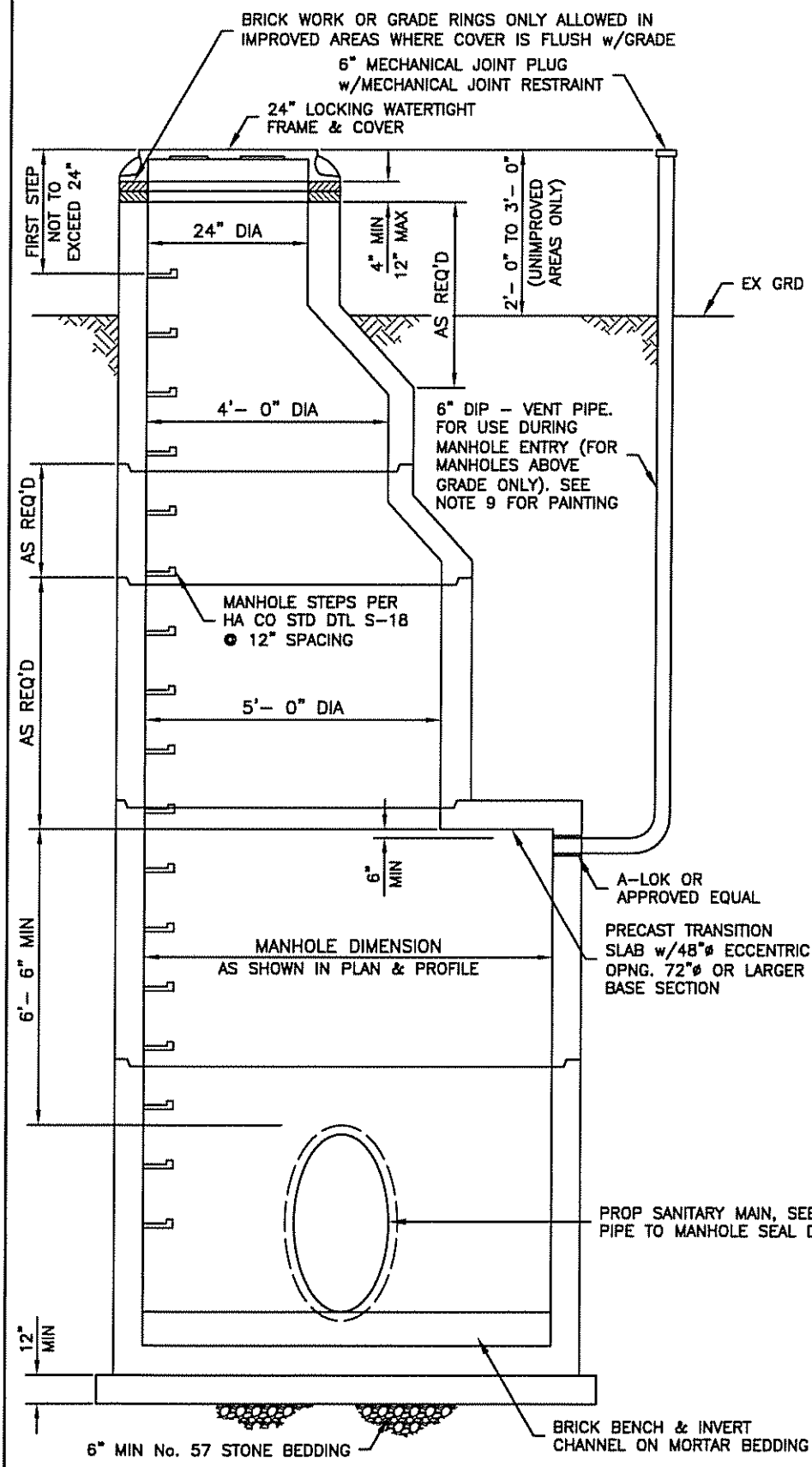

NOTES:

1. MANHOLE SHALL MEET THE REQUIREMENTS OF ASTM C478 AND APPROVED HARFORD COUNTY STANDARD SPECIFICATIONS. CONCRETE SHALL BE 4000 PSI MIN.
2. CONE TRANSITION MAY BE USED IN PLACE OF TRANSITION SLAB WHERE SPACE ALLOWS.
3. BASE SECTION AND TRANSITION SLAB DESIGNS SHALL BE PREPARED AND CERTIFIED BY A MARYLAND LICENSED PROFESSIONAL ENGINEER.
4. MANHOLE FRAME AND COVER SHALL BE WATERTIGHT IN ACCORDANCE WITH HARFORD COUNTY STANDARD DETAIL S–17. INSTALLATION SHALL BE IN ACCORDANCE WITH HARFORD COUNTY STANDARD DETAIL S–8.
5. PROVIDE RUBBER COMPRESSION GASKET FOR PIPE CONNECTION TO CONCRETE BASE, A–LOK OR APPROVED EQUAL.
6. MANHOLE BENCHES AND INVERT CHANNELS SHALL BE CONSTRUCTED OF SEWER BRICK IN ACCORDANCE WITH HARFORD COUNTY STANDARD SPECIFICATIONS AND DETAILS. EDGE OF BENCH SHALL MATCH CROWN OF THE LARGEST PIPE. BENCH SHALL SLOPE TOWARD THE CHANNEL AT 1" PER FOOT.
7. PROVIDE PIPE JOINT WITHIN 5 FEET OF THE OUTSIDE WALL OF MANHOLE.
8. WHERE DEPTH OF COVER OVER THE PROPOSED TOP OF PIPE IS LESS THAN 6'– 6" THERE SHALL BE NO TRANSITION SMALLER MANHOLE SECTION. THE MANHOLE WIDTH AT THE BASE SHALL EXTEND FULLY ABOVE GRADE TO PROVIDE A MINIMUM OF 6'– 6" HEAD ROOM WITHIN THE MANHOLE. A TOP SLAB SHALL BE INSTALLED WITH THE MANHOLE FRAME CAST INTO THE TOP SLAB. IN ALL CASES THE TOP OF MANHOLE SHALL BE 2'– 0" TO 3'– 0" ABOVE GRADE.
9. VENT PIPE COATING TO BE THE SAME AS ON MANHOLE FRAME AND COVER.

HARFORD COUNTY, MD
DEPARTMENT OF PUBLIC WORKS

STANDARD SEWER DETAILS

72" AND LARGER MANHOLES FOR 36" PIPE AND LARGER

ISSUED 03/15/09
REVISED 11/10/14

PLATE S–3a

NOTES:

1. ALL CONCRETE SHALL BE MIX NO. 1
2. WALLS SHALL BE 8" THICK THROUGHOUT, EXCEPT WHERE DIRECTED.
3. BENCH FULL HEIGHT OF PIPE AS SHOWN FOR MANHOLES.
4. SLABS SHALL HAVE HOOKS OR HOLES FOR LIFTING ON ALL BUILT-IN-PLACE SHALLOW MANHOLES.
5. IF SLAB IS PRECAST (FACTORY OR SITE) PROVIDE (2) 3/4" CONTINUOUS BANDS OF MASTIC ROPE.
6. GRADE RINGS SHALL BE SET ON A FULL BED OF MORTAR.

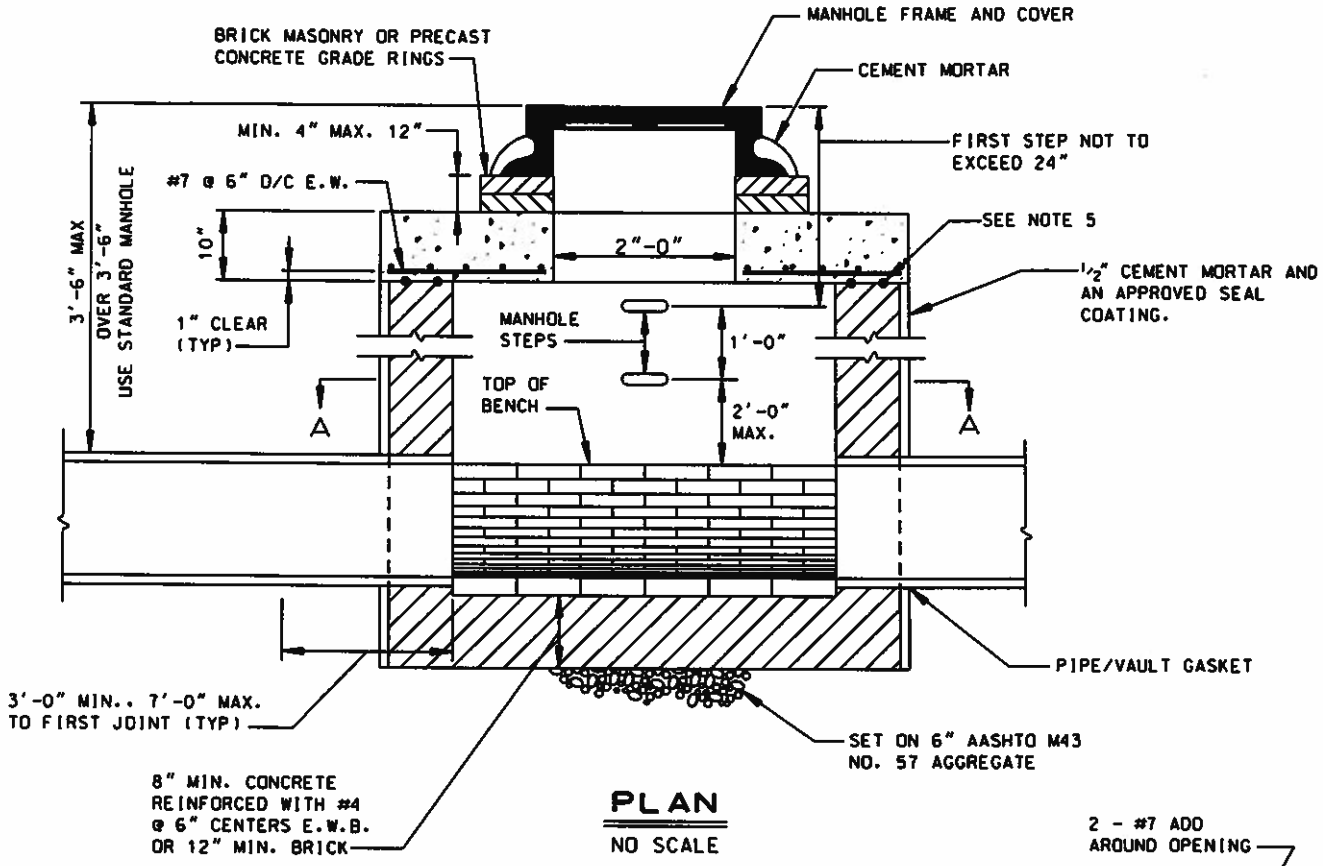

PLAN
NO SCALE

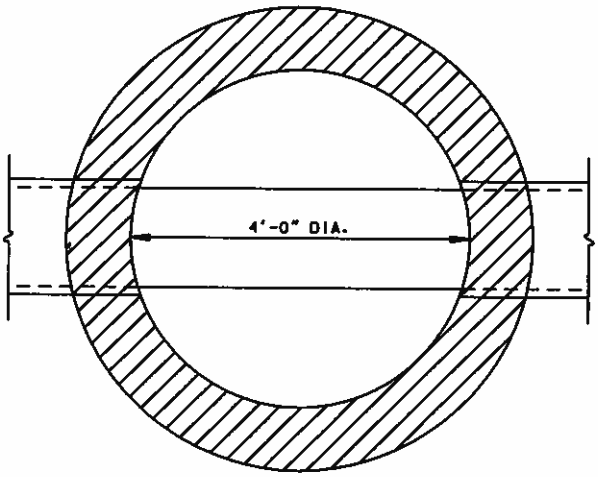

SECTION A-A
NO SCALE

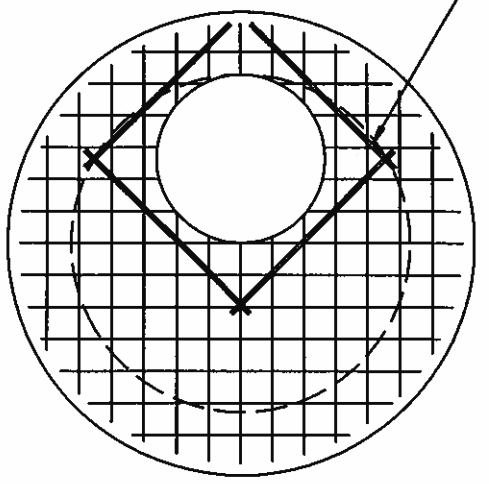

TOP SLAB
NO SCALE

HARFORD COUNTY, MD
DEPARTMENT OF PUBLIC WORKS
Robert B. Cooper

STANDARD SEWER DETAILS

ROUND SHALLOW MANHOLE
BRICK CONSTRUCTION

ISSUED	7/98
REVISED	4/17/01
REISSUED	3/15/09
PLATE	S-4

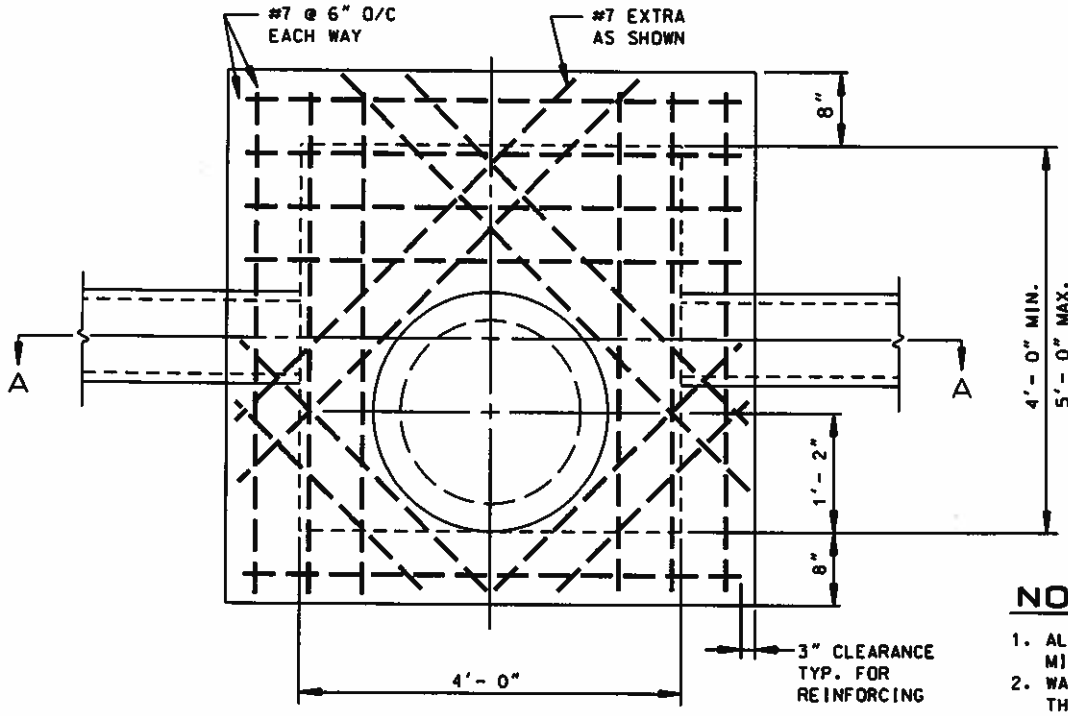

PLAN

NOTE:

MANHOLE FRAME AND COVER TO BE PLACED AS SHOWN

NOTES:

1. ALL CONCRETE SHALL BE MIX NO. 1.
2. WALLS SHALL BE 8" THICK THROUGHOUT. EXCEPT WHERE DIRECTED.
3. SLABS SHALL HAVE HOOKS OR HOLES FOR LIFTING ON ALL BUILT-IN-PLACE SHALLOW MANHOLES.
4. BENCH FULL HEIGHT OF PIPE AS SHOWN FOR MANHOLES.
5. IF SLAB IS PRECAST (FACTORY OR SITE) PROVIDE (2) 3/4" CONTINUOUS BANDS OF MASTIC ROPE.
6. GRADE RINGS SHALL BE SET ON A FULL BED OF MORTAR.

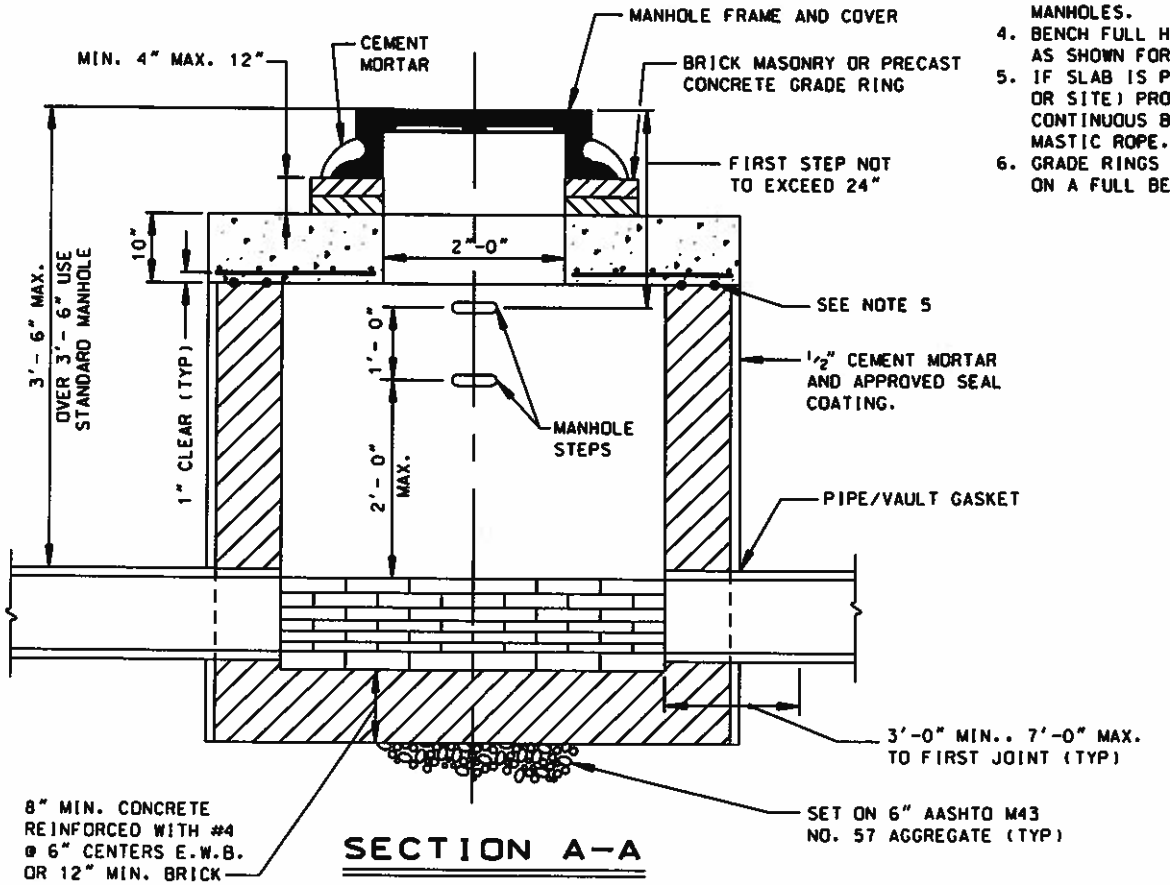

SECTION A-A

HARFORD COUNTY, MD
DEPARTMENT OF PUBLIC WORKS

Robert B. Cooper

STANDARD SEWER DETAILS

SQUARE SHALLOW MANHOLE BRICK CONSTRUCTION

ISSUED 7/98
REVISED 4/17/01
REISSUED 3/15/09

PLATE S-5

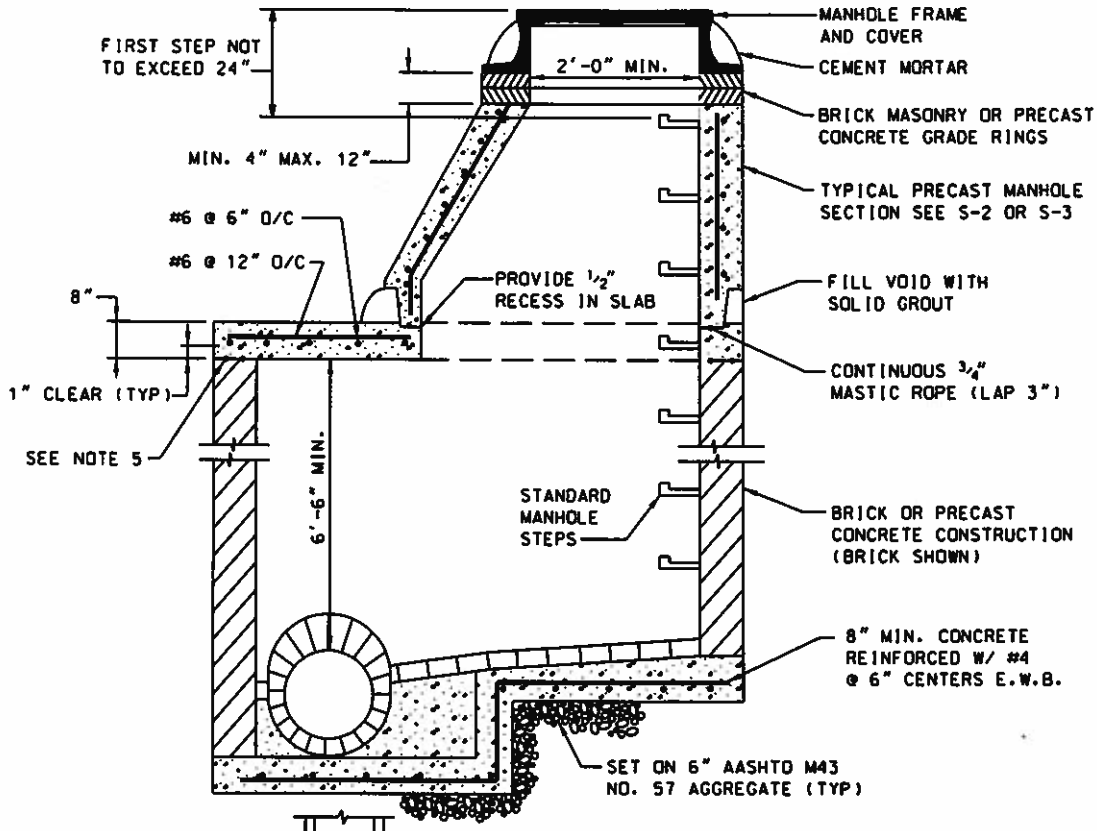

DETAIL IS FOR CONCEPT ONLY. SHOP DRAWINGS SHALL BE SUBMITTED FOR APPROVAL PRIOR TO CONSTRUCTION. FOR SHALLOWER SEWERS, CONE SECTION MAY BE DELETED AND FRAME AND COVER CAST IN SLAB.

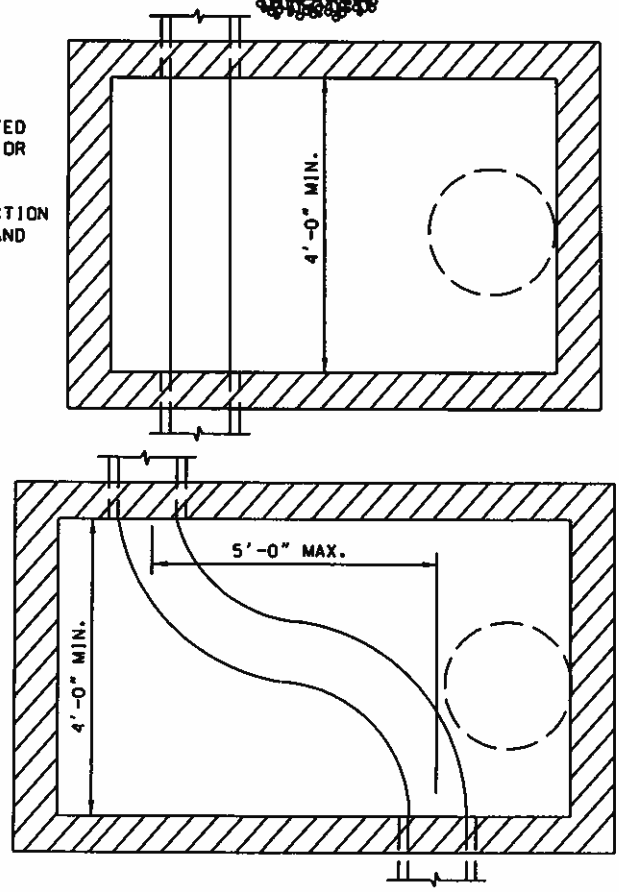

NOTES:

1. ALL CONCRETE SHALL BE MIX NO. 2
2. THICKNESS OF WALLS TO BE INCREASED TO 12", 12'-0" BELOW UNDERSIDE OF FRAME (FOR BRICK MANHOLES ONLY).
3. WALLS SHALL BE 8" THICK THROUGHOUT EXCEPT WHERE DIRECTED (FOR BRICK MANHOLES ONLY).
4. APPROVED SEAL COATING TO BE APPLIED TO EXTERIOR CEMENT MORTAR (FOR BRICK MANHOLES ONLY).
5. IF SLAB IS PRECAST (FACTORY OR SITE) PROVIDE (2) 3/4" CONTINUOUS BANDS OF MASTIC ROPE.
6. GRADE RINGS SHALL BE SET ON A FULL BED OF MORTAR.

HARFORD COUNTY, MD
DEPARTMENT OF PUBLIC WORKS
Robert B Cooper

STANDARD SEWER DETAILS

OFFSET MANHOLE

ISSUED 7/98
REVISED 4/17/01
REISSUED 3/15/09

PLATE S-6

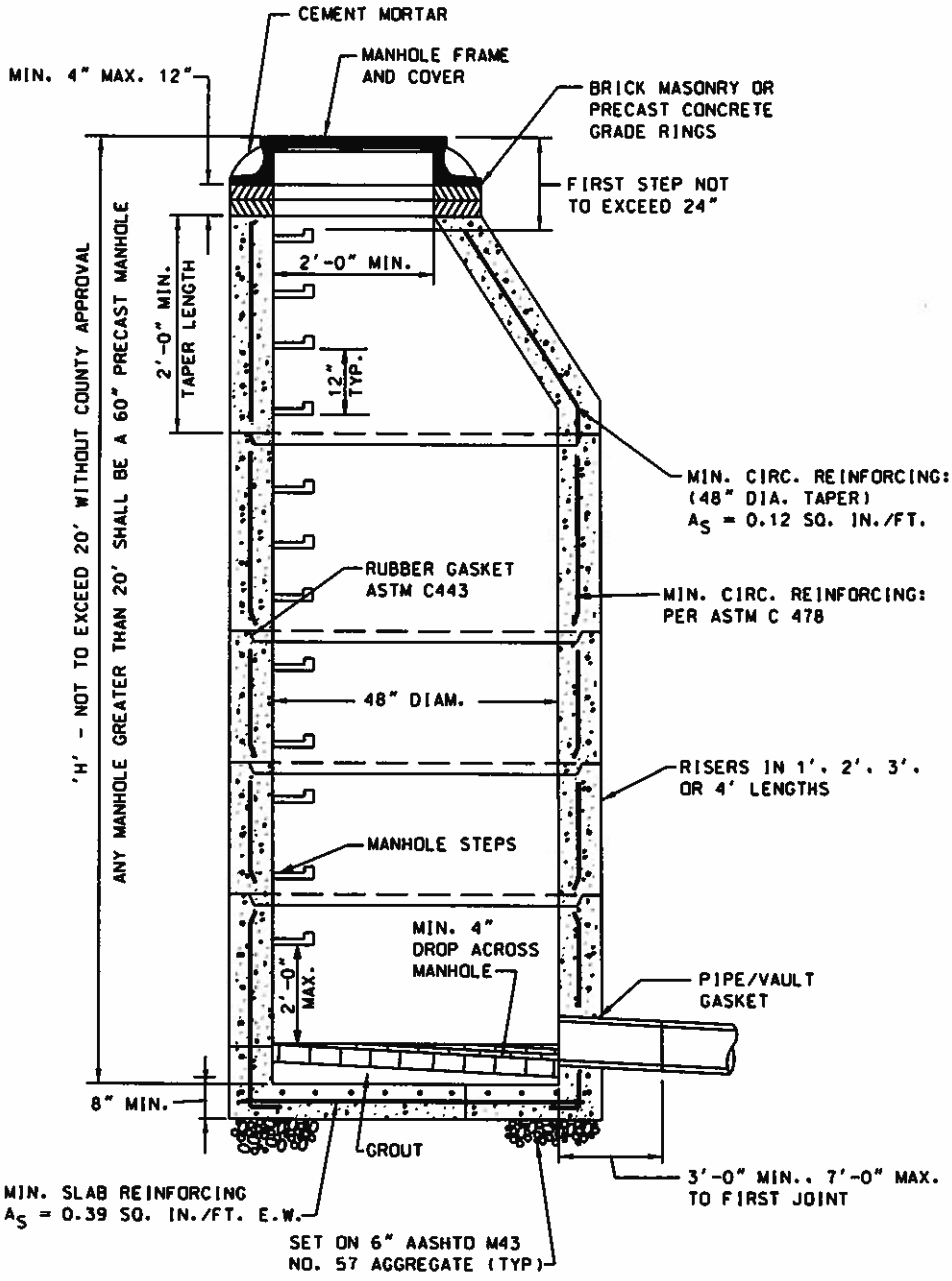

NOTES:

1. EXCEPT AS NOTED, MANHOLE TAPERS, RISERS, AND BASES SHALL BE FURNISHED IN STRICT ACCORDANCE WITH ASTM DESIGNATION C478 (LATEST) FOR "PRECAST REINFORCED CONCRETE MANHOLE SECTIONS".
2. CONCRETE FOR PRECAST CONSTRUCTION SHALL BE 4,000 PSI. MIN
3. MANHOLE STEPS SHALL BE SPACED AS SHOWN IN A SINGLE VERTICAL ALIGNMENT. THE STEPS SHALL NOT BE STAGGERED.
4. GRADE RINGS SHALL BE SET ON A FULL BED OF MORTAR.

HARFORD COUNTY, MD
DEPARTMENT OF PUBLIC WORKS
Robert B Cooper

STANDARD SEWER DETAILS

TERMINAL MANHOLE

ISSUED	7/98
REVISED	4/17/01
REISSUED	3/15/09
PLATE	S-7

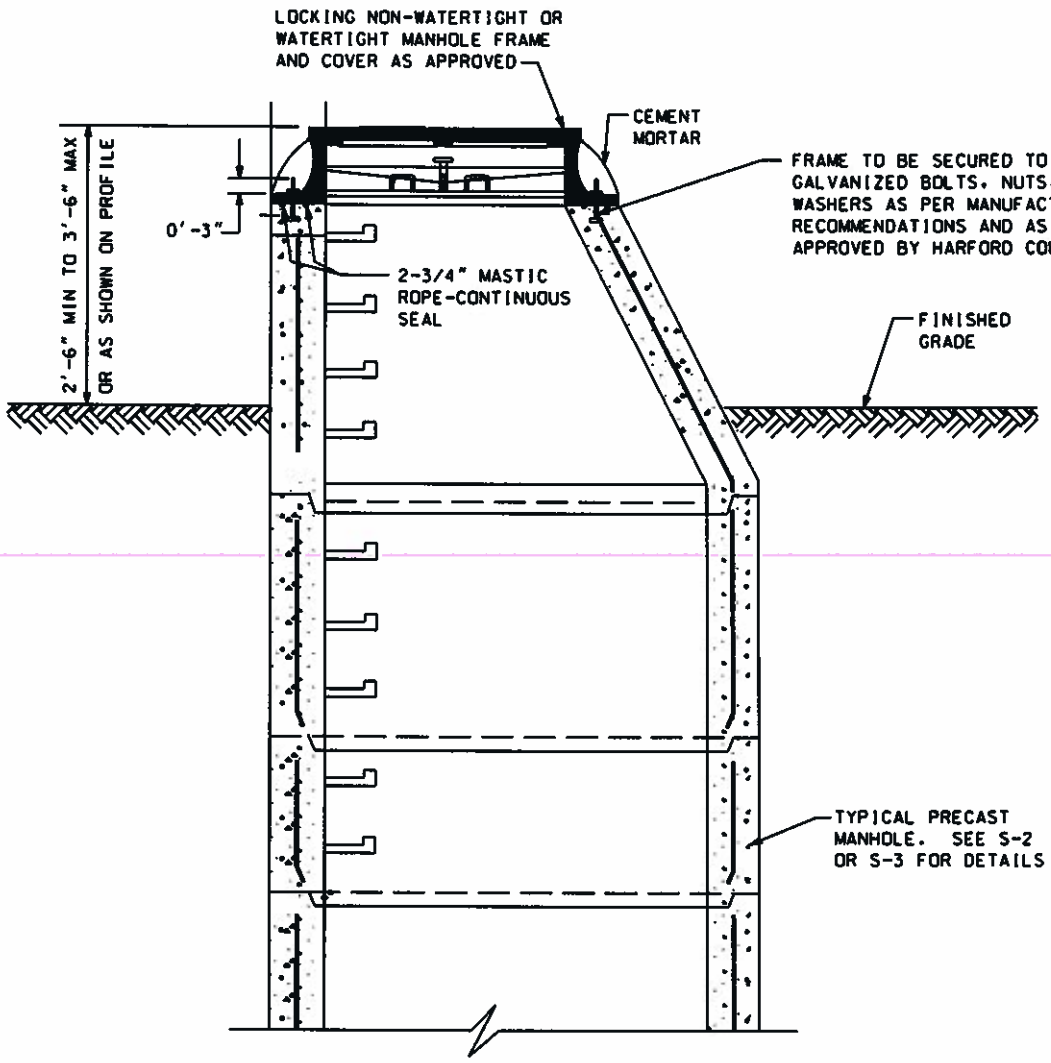

NOTES:

1. FRAME AND COVER SHALL BE PAINTED WITH A METAL PRIMER COAT FOLLOWED BY A COAT OF FLUORESCENT GREEN INDUSTRIAL ENAMEL.
2. GRADE RINGS AND BRICK BENEATH THE FRAME ARE PROHIBITED.

HARFORD COUNTY, MD
DEPARTMENT OF PUBLIC WORKS

Robert B. Cooper

STANDARD SEWER DETAILS

MANHOLE WITHIN OFFSITE/UNIMPROVED AREA

ISSUED	7/98
REVISED	4/17/01
REVISED	5/11/06
REVISED	3/15/09

PLATE S-8

DROP CONNECTIONS			
SIZE OF SEWER	TYPE A		TYPE B
	MAX. DROP	MIN. DROP	MIN. DROP
8"	3'-9"	1'-4"	3'-9"
12"	6'-0"	1'-10"	4'-9"
15"	6'-0"	2'-8"	N/A
16"	N/A	N/A	5'-3"
18"	6'-0"	3'-6"	6'-0"

DROP CONNECTIONS	
TYPE B	
MAX. ALLOWED SLOPE	MAX. DROP
15-20%	5'-0"
5-15%	7'-0"
5% or LESS	12'-0"

NOTES:

1. PIPE PENETRATIONS SHALL NOT BE LOCATED BETWEEN MANHOLE STEPS.
2. USE OF PRE-CAST COLLARS FOR MAIN DROPS AT MANHOLES ALLOWED ON INCOMING SEWER SLOPES UP TO 3% MAX.
3. TYPE B DROPS WITH SLOPES BETWEEN 3% AND 20% REQUIRE THE USE OF DUCTILE IRON PIPE AND FITTINGS BEYOND THE DUCTILE IRON TO PVC ADAPTER SHOWN.
4. TYPE B DROPS WITH SLOPES OVER 20% WILL REQUIRE SPECIAL DESIGN WITH ADDITIONAL FITTINGS.

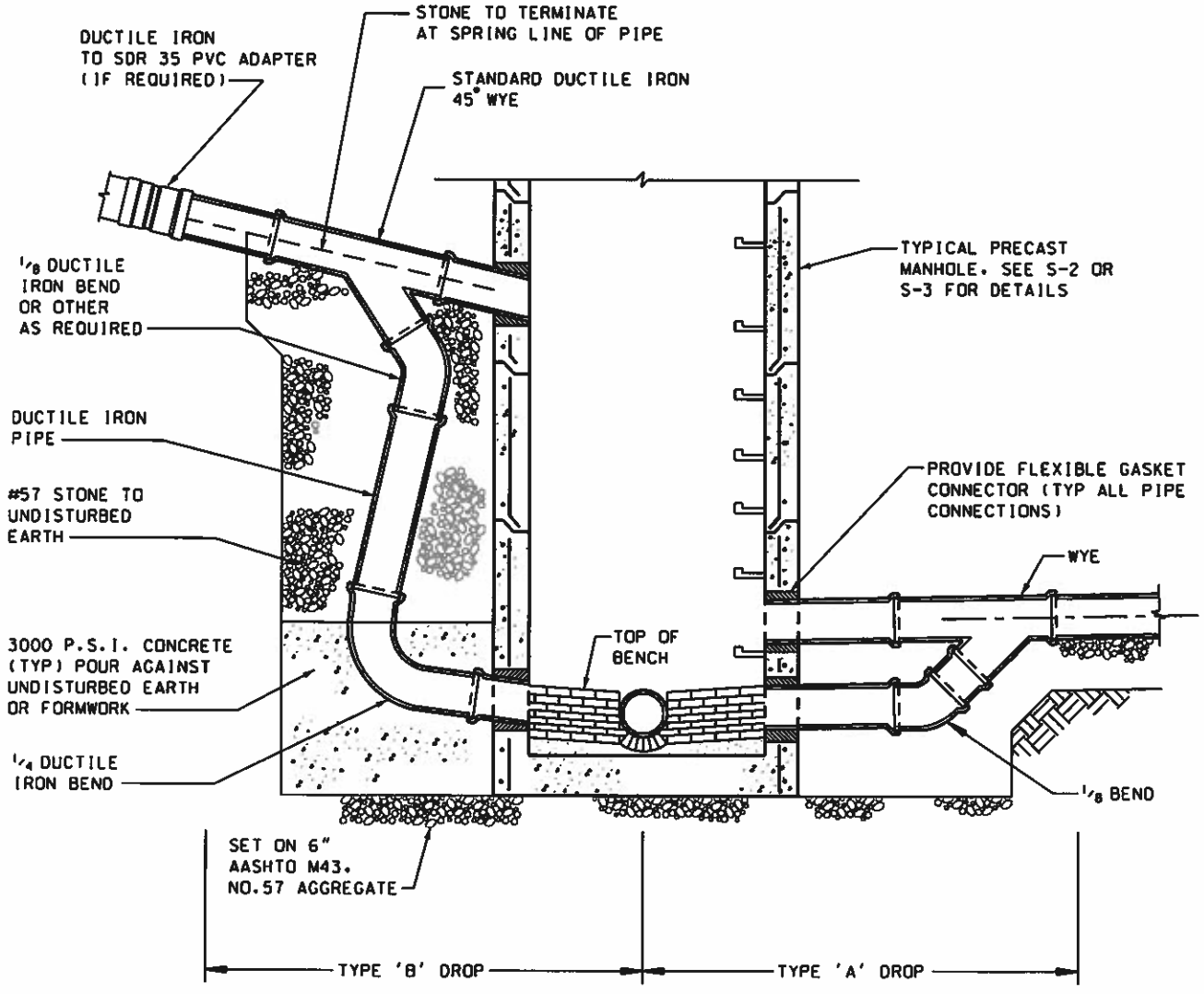

SECTION A-A

HARFORD COUNTY, MD
DEPARTMENT OF PUBLIC WORKS

Robert B Cooper

STANDARD SEWER DETAILS

BUILT -IN-PLACE
MAIN DROP AT MANHOLE
TYPE "A" AND "B"

ISSUED	7/1/98
REVISED	11/26/03
REVISED	3/15/09
REVISED	4/16/10
PLATE	S-9

NOTES:

1. ALL MANHOLE SECTIONS SHALL BE FURNISHED IN STRICT ACCORDANCE WITH ASTM DESIGNATION C478 (LATEST) FOR "PRECAST REINFORCED CONCRETE MANHOLE SECTIONS".
2. PRE-CAST CONCRETE SHALL BE 4,000 P.S.I. MIN.
3. MANHOLE STEPS AND CONCRETE REINFORCING NOT SHOWN FOR CLARITY.
4. CHANNEL AS PER STANDARD DETAILS.
5. CONTRACTOR SHALL INSTALL AASHTO M43. NO. 57 AGGREGATE BETWEEN "U" COLLAR AND UNDISTURBED EARTH.
6. MAXIMUM ALLOWABLE INCOMING SEWER SLOPE FOR PRE-CAST DROP MANHOLE SHALL BE 3%.
7. THE PIPE MATERIAL FOR THE MAIN AND THE DROP CONNECTION SHALL BE THE SAME.

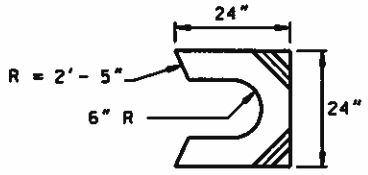

PLAN

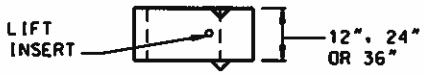

SECTION

U-SHAPED CONCRETE COLLAR

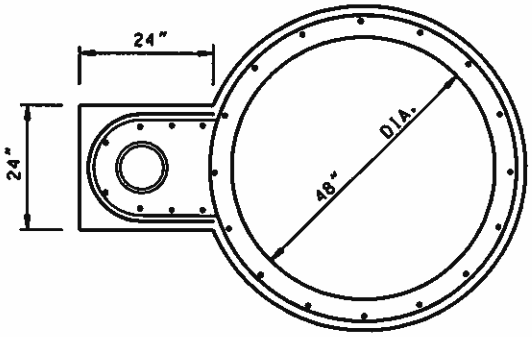

REINFORCING AREA = 0.12 IN./VERTICAL FT. JOINED TO BASE REINFORCEMENT.

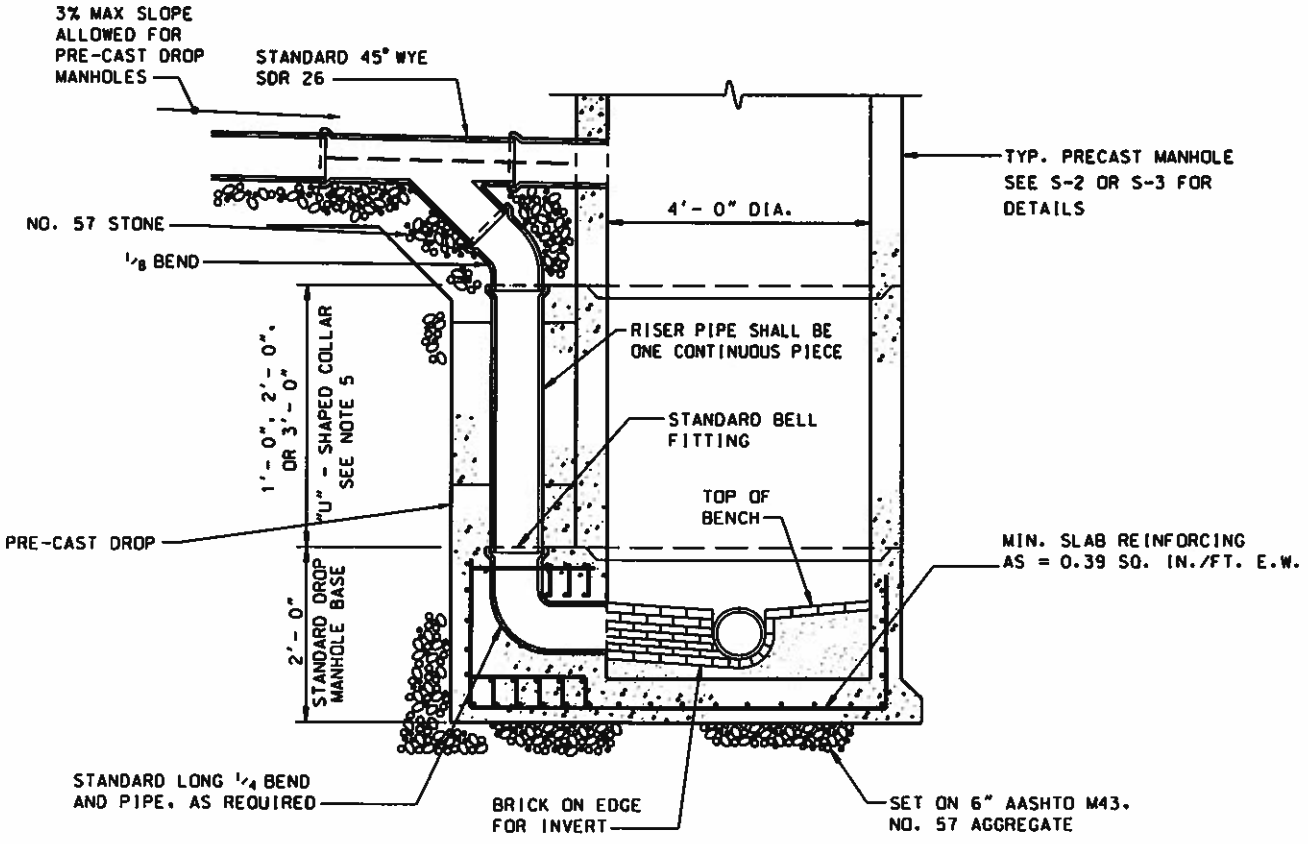

HARFORD COUNTY, MD
DEPARTMENT OF PUBLIC WORKS

STANDARD SEWER DETAILS

48" MANHOLE WITH PRECAST COLLARS FOR MAIN DROP CONNECTION (8" DIA. PIPE)

ISSUED	7/1/98
REVISED	3/15/09
REVISED	4/16/10

PLATE S-10

PAGE LEFT
INTENTIONALLY
BLANK

HARFORD COUNTY, MD DEPARTMENT OF PUBLIC WORKS Robert B. Cooper	STANDARD SEWER DETAILS NOT USED	ISSUED 7/1/98 REVISED 11/26/03 REVISED 3/15/09 PLATE S-11

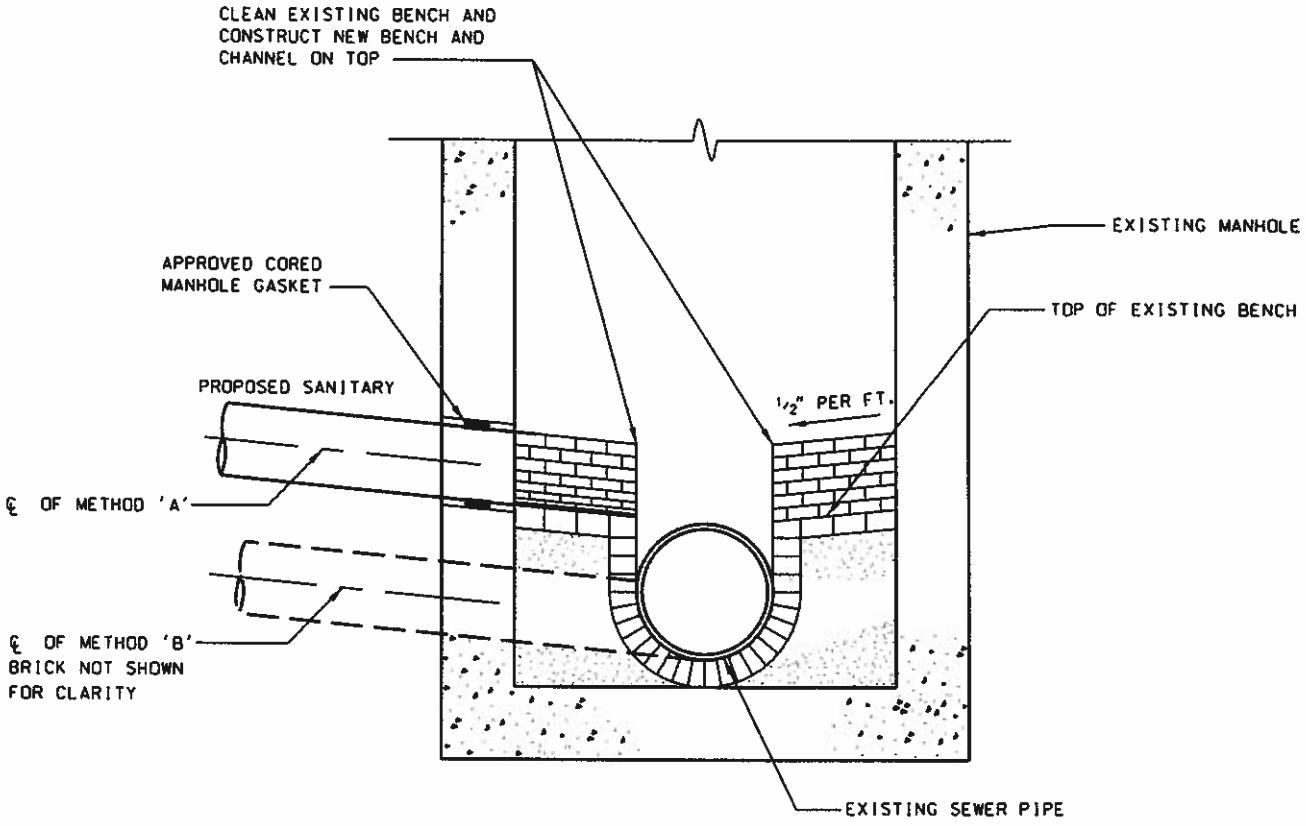

NOTES:

1. PRIOR TO CONNECTING TO EXISTING MANHOLE, AN INSPECTION WILL BE PERFORMED BY COUNTY PERSONNEL TO DETERMINE WHETHER THE EXISTING MANHOLE REQUIRES ANY REHABILATATION.
2. INVERT OF PROPOSED SANITARY TO BE CHANNELED AS PER STANDARD DETAILS.
3. NEW OPENING SHALL BE CORED AND SEALED.
4. METHOD 'B' IS DEFINED AS CONNECTING TO EXISTING MANHOLE BELOW EXISTING BENCH. WHEN USING METHOD 'B', THE ENTIRE BRICK CHANNEL AND BENCH SHALL BE REMOVED AND RE-CONSTRUCTED TO SUIT THE PROPOSED INCOMING SEWER. FLOW SHALL BE EITHER BYPASS PUMPED OR A FLEXIBLE SLEEVE INSTALLED DURING THE WORK. METHOD 'B' SHALL BE USED ONLY WHEN SPECIFICALLY APPROVED BY THE COUNTY.

HARFORD COUNTY, MD
DEPARTMENT OF
PUBLIC WORKS

STANDARD SEWER DETAILS

METHOD OF CONNECTION
TO EXISTING MANHOLE

ISSUED 7/98
REVISED 11/26/03
REVISED 3/15/09

PLATE S-12

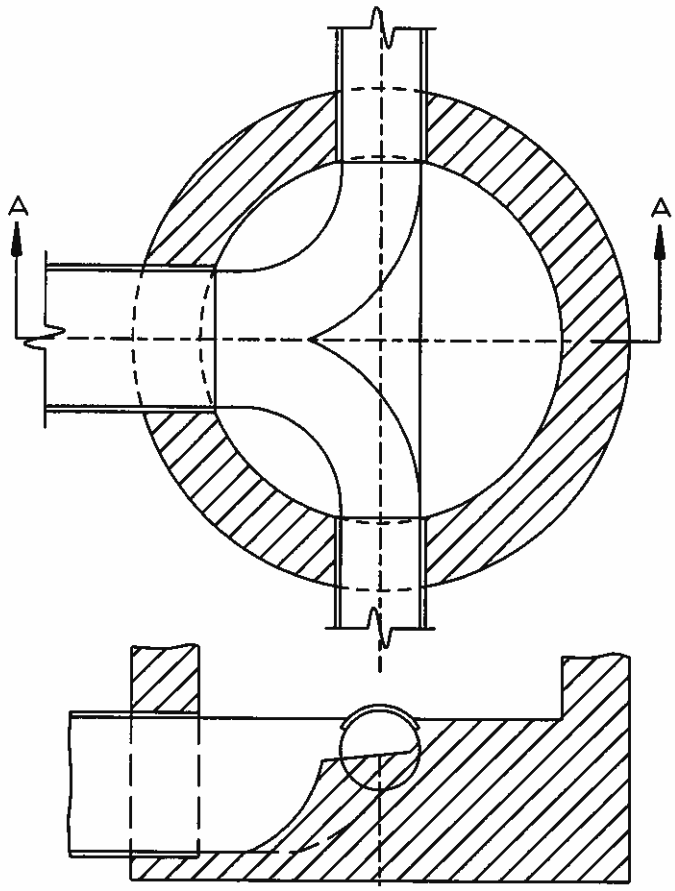

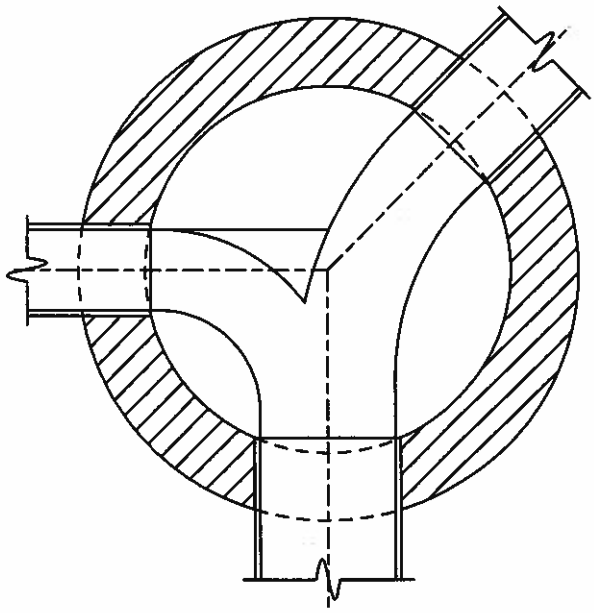

SECTION A-A

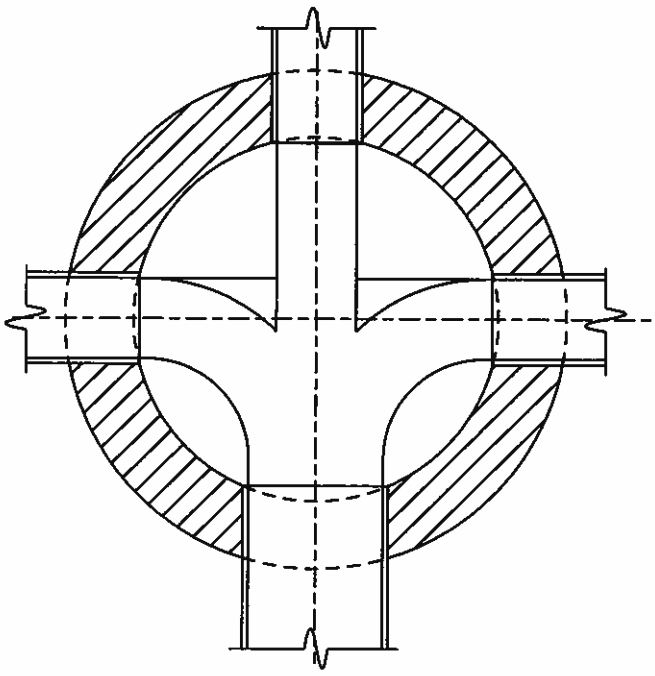

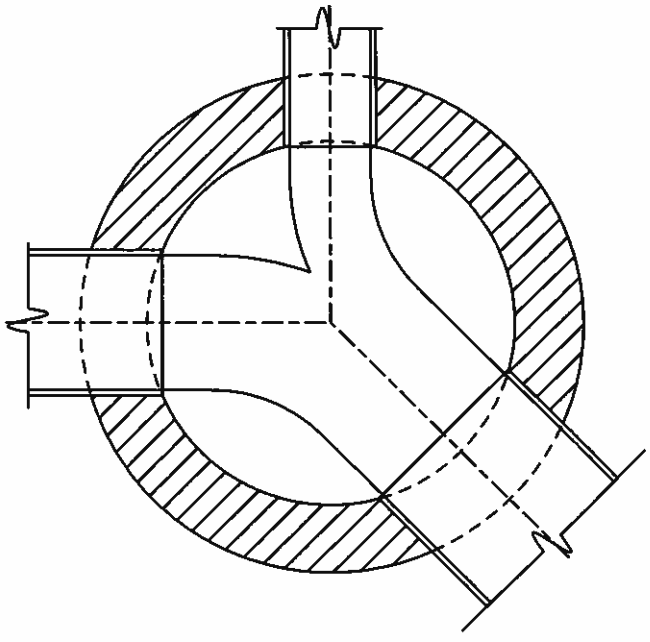

HARFORD COUNTY, MD
DEPARTMENT OF
PUBLIC WORKS

STANDARD SEWER DETAILS

PLANS FOR
MANHOLE CHANNELING

ISSUED 7/1/98
REVISED
REISSUED 3/15/09

PLATE S-13

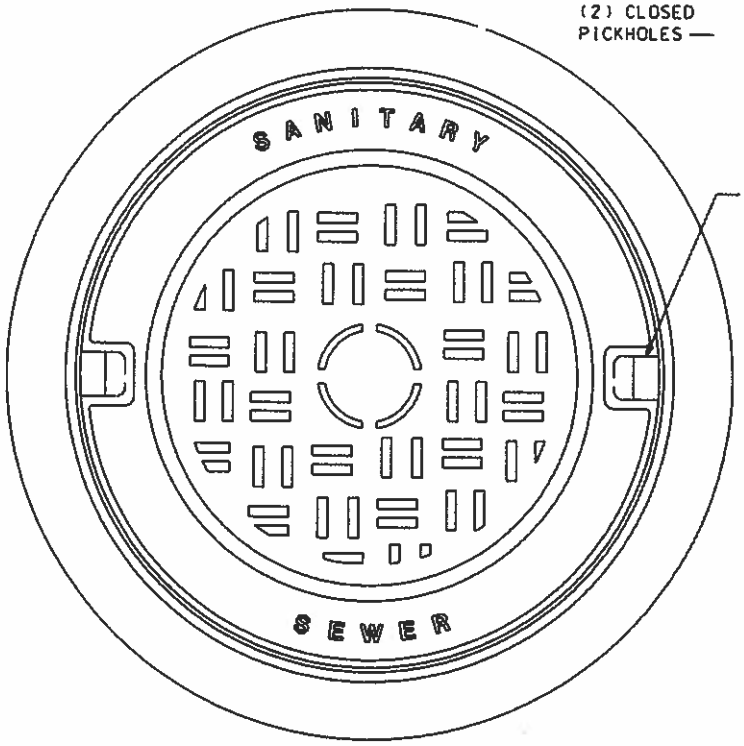

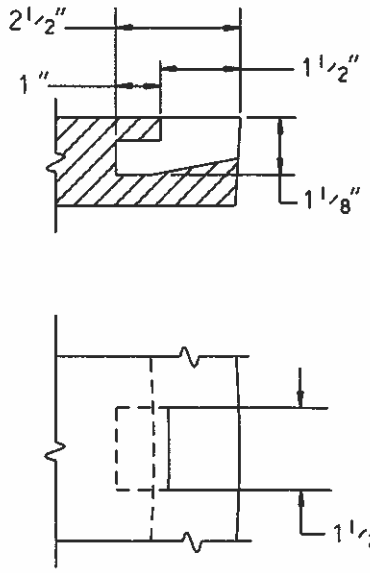

CLOSED PICKHOLE DETAIL

NO SCALE

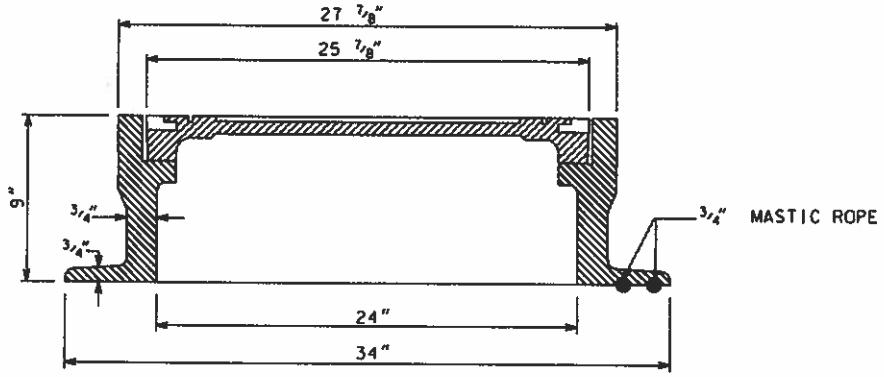

- HEAVY DUTY
- MAT'L. ASTM A48 CL 30B
- MACHINE BEARING SURFACES
- MANUFACTURER'S MARKING ON FRAME AND COVER
- COVER WEIGHT: 170 LBS
- FRAME WEIGHT: 250 LBS

NOTES:

1. MANHOLES LOCATED IN PAVED AND LAWN AREAS SHALL BE CONSTRUCTED TO PROPOSED FINISH GRADE.

HARFORD COUNTY, MD
DEPARTMENT OF
PUBLIC WORKS

STANDARD SEWER DETAILS

STANDARD FRAME AND COVER

ISSUED 7/98
REVISED 4/17/01
REVISED 3/15/09

PLATE S-14

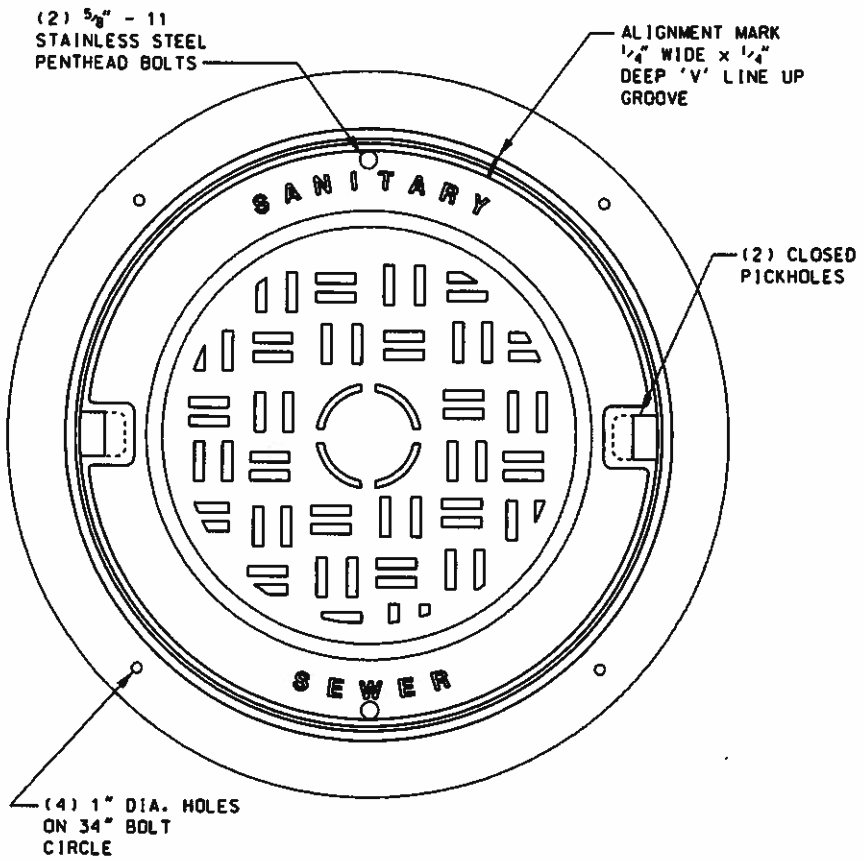

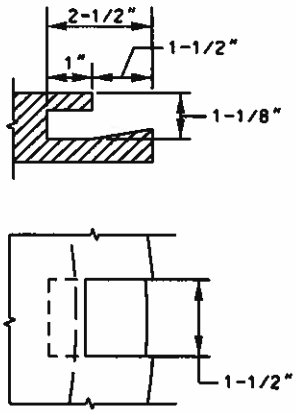

CLOSED PICKHOLE DETAIL

NO SCALE

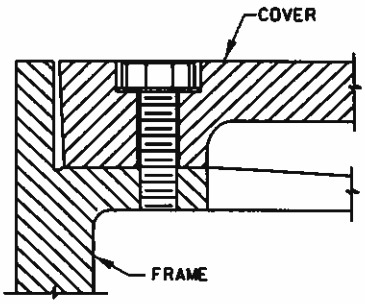

LOCKING FRAME AND COVER DETAIL

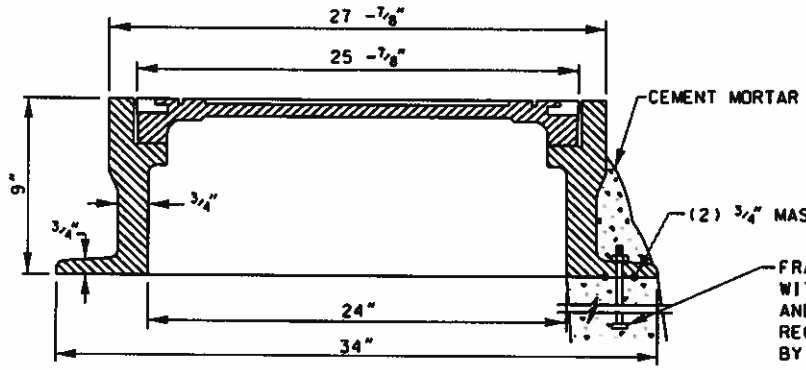

FRAME TO BE SECURED TO CONE WITH (4) GALVANIZED BOLTS, NUTS, AND WASHERS, AS PER MANUFACTURERS' RECOMMENDATIONS AND AS APPROVED BY HARFORD COUNTY.

- HEAVY DUTY
- MAT'L. ASTM A48 CL 30B
- MACHINE BEARING SURFACES
- MANUFACTURER'S MARKING ON FRAME AND COVER
- COVER WEIGHT: 170 LBS
- FRAME WEIGHT: 250 LBS

NOTES:

1. MANHOLES LOCATED IN PAVED AND LAWN AREAS SHALL BE CONSTRUCTED TO PROPOSED FINISH GRADE.
2. MANHOLES LOCATED IN OTHER AREAS SHALL BE A MAXIMUM OF 3'- 6" AND A MINIMUM OF 2'- 6" ABOVE EXISTING GRADE AND THE FRAME AND COVER SHALL BE PAINTED WITH A METAL PRIMER COAT (WHITE) FOLLOWED BY A COAT OF FLUORESCENT GREEN INDUSTRIAL ENAMEL.
3. APPROVED FRAME AND COVERS WITH CAM LOCKING DEVICES MAY BE SUBSTITUTED.

HARFORD COUNTY, MD
DEPARTMENT OF PUBLIC WORKS

STANDARD SEWER DETAILS

LOCKING FRAME AND COVER NON-WATERTIGHT

ISSUED	7/98
REVISED	4/17/01
REVISED	11/26/03
REVISED	3/15/09

PLATE S-15

PAGE LEFT
INTENTIONALLY
BLANK

HARFORD COUNTY, MD DEPARTMENT OF PUBLIC WORKS	STANDARD SEWER DETAILS	ISSUED 07/98 REVISED 11/10/14
	NOT USED	PLATE S-16

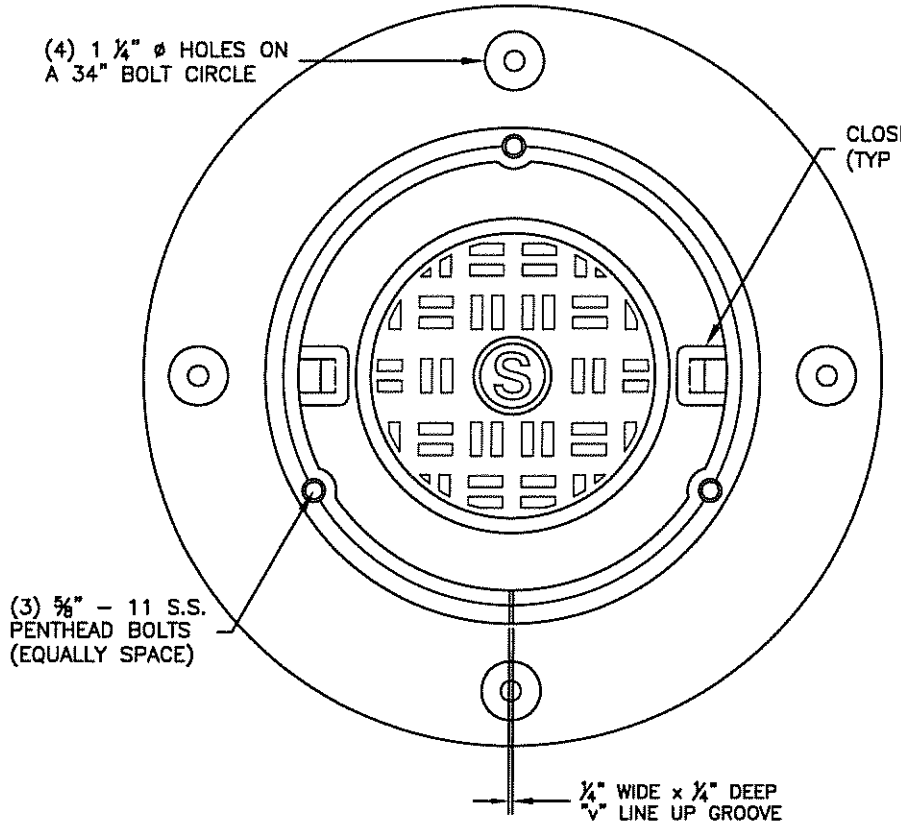

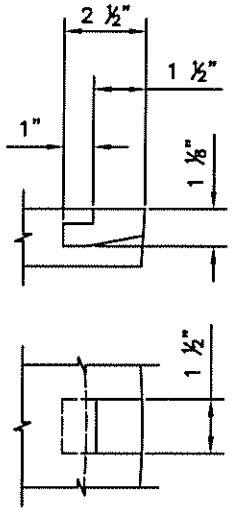

CLOSED PICKHOLE DETAIL

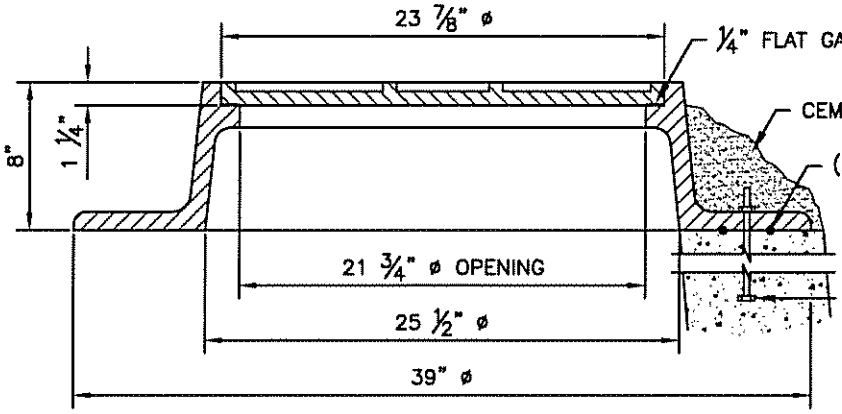

- HEAVY DUTY
- MACHINED BEARING SURFACES (VERTICAL AND HORIZONTAL)
- MANUFACTURERS' MARKING ON FRAME AND COVER
- MAT'L: ASTM A48 CL 30B
- TOTAL WEIGHT: 420 LBS

NOTES:

1. MANHOLES LOCATED IN PAVED AREAS THAT ARE REQUIRED TO BE WATERTIGHT, SHALL UTILIZE A STANDARD FRAME AND COVER WITH A STAINLESS STEEL INSERT DISH AND RUBBER GASKET.
2. MANHOLES LOCATED IN LAWN AREAS SHALL BE CONSTRUCTED TO PROPOSED FINISH GRADE.
3. MANHOLES LOCATED IN OTHER AREAS SHALL BE A MAXIMUM OF 3'– 6" AND A MINIMUM OF 2'– 6" ABOVE EXISTING GRADE AND THE FRAME AND COVER SHALL BE PAINTED WITH A METAL PRIMER COAT (WHITE) FOLLOWED BY A COAT OF FLUORESCENT GREEN INDUSTRIAL ENAMEL.
4. MANHOLES LOCATED WITHIN THE 100 YEAR FLOODPLAIN SHALL EXTEND 3'– 0" ABOVE EXISTING GRADE.

HARFORD COUNTY, MD DEPARTMENT OF PUBLIC WORKS	STANDARD SEWER DETAILS WATERTIGHT MANHOLE FRAME & COVER (FOR NON PAVED AREAS)	ISSUED 07/98 REVISED 11/10/14 PLATE S–17

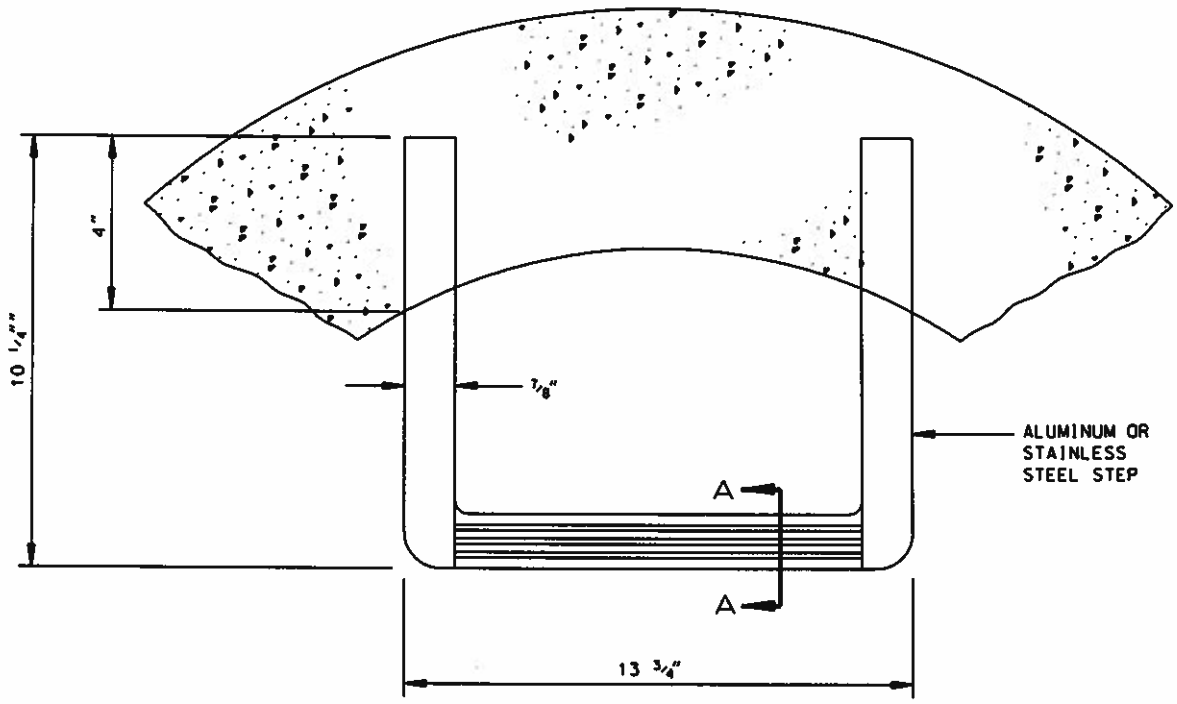

PLAN
NO SCALE

NOTE:

STEPS TO BE FABRICATED OF ALUMINUM ALLOY 6061-T6 OR TYPE 304 STAINLESS STEEL. PORTION OF STEP TO BE EMBEDDED IN MANHOLE WALL OR WALL INSERT SHALL BE DIPPED IN HEAVY BODIED BITUMINOUS COATING.

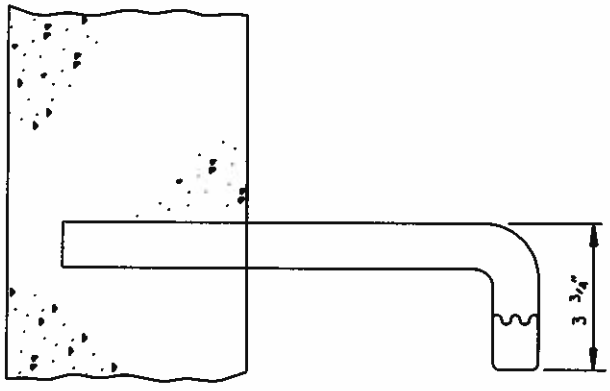

PROFILE
NO SCALE

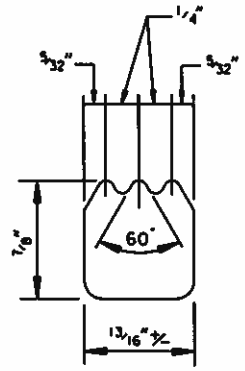

SECTION A-A
NO SCALE

HARFORD COUNTY, MD
DEPARTMENT OF
PUBLIC WORKS

Robert B. Cooper

STANDARD SEWER DETAILS

METAL STEP

ISSUED 7/1/98
REVISED
REISSUED 3/15/09

PLATE S-18

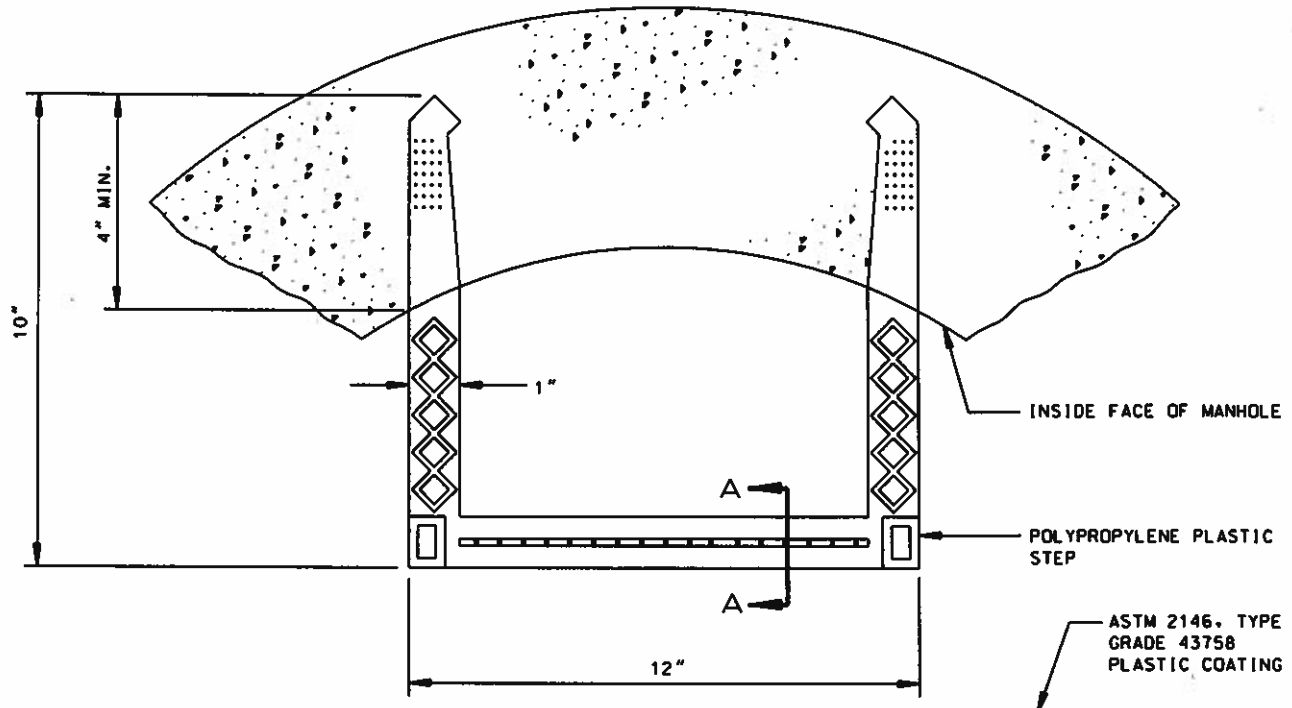

NOTE:

STEPS SHALL BE PLACED INTO WET CONCRETE WALL DURING MANUFACTURE OR MORTARED INTO HOLES AFTER CONCRETE HAS SET.

PLAN

NO SCALE

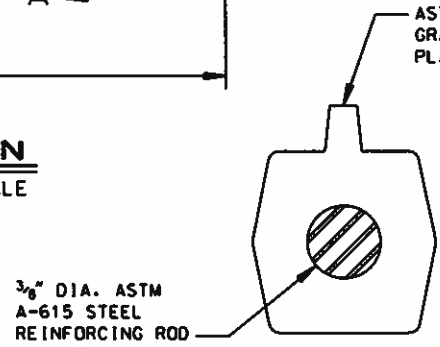

SECTION A-A

NO SCALE

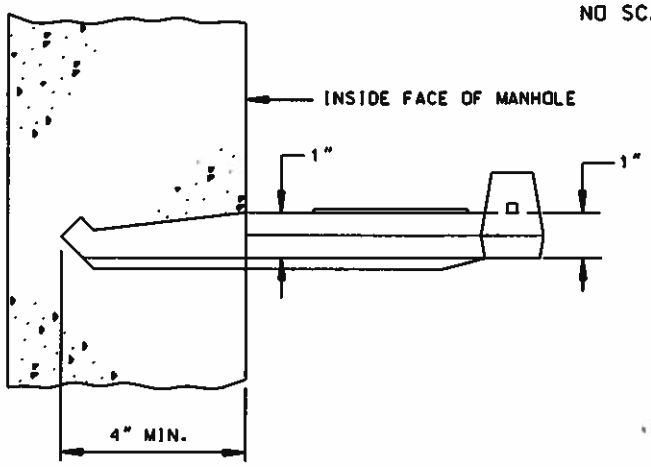

PROFILE

NO SCALE

HARFORD COUNTY, MD
DEPARTMENT OF
PUBLIC WORKS

Robert B Coofer

STANDARD SEWER DETAILS

PLASTIC STEP

ISSUED 7/1/98
REVISED
REISSUED 3/15/09

PLATE S-19

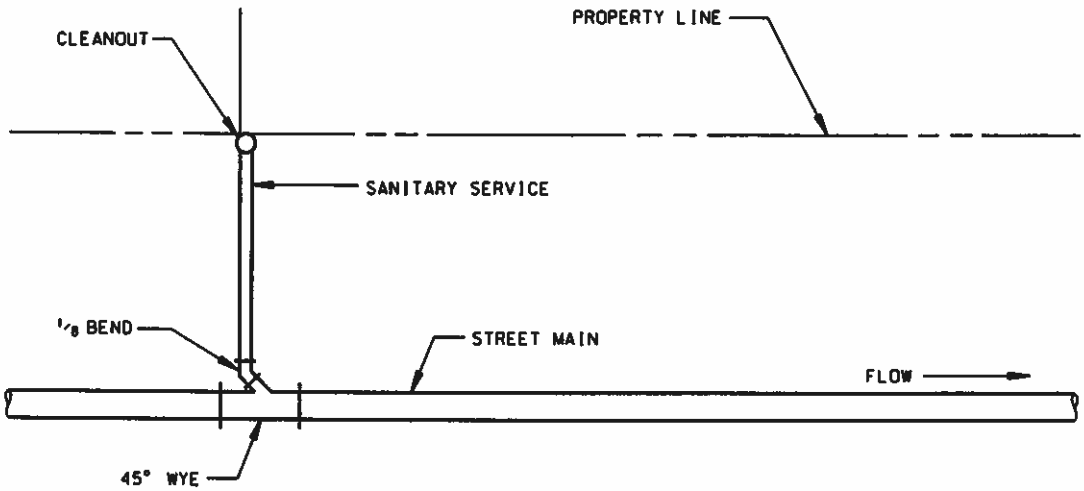

PLAN
NO SCALE

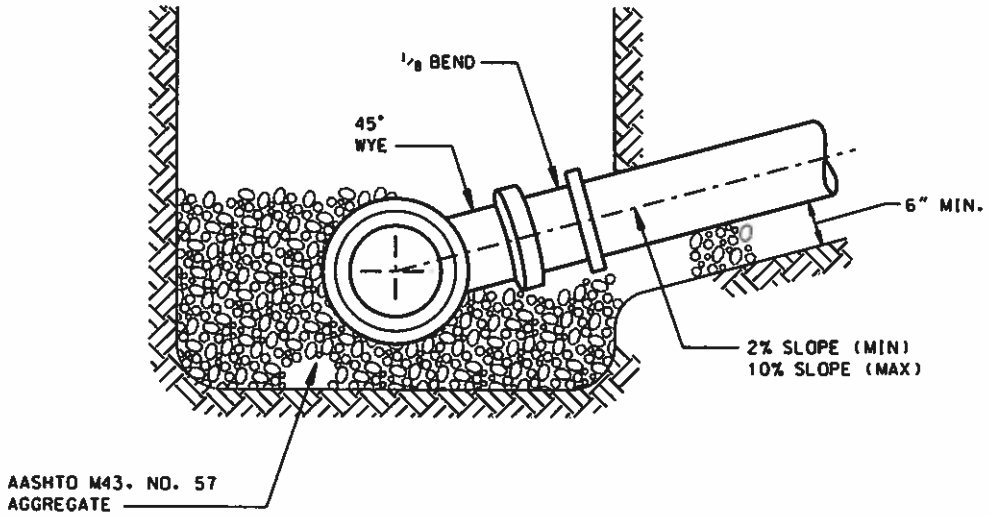

SECTION
NO SCALE

HARFORD COUNTY, MD
DEPARTMENT OF PUBLIC WORKS

STANDARD SEWER DETAILS

HOUSE SERVICE CONNECTION AT MAIN

ISSUED 7/1/98
REVISED
REVISED 3/15/09
PLATE S-20

NOTES:

1. TRENCH TO BE COMPACTED IN ACCORDANCE WITH STANDARD SPECIFICATIONS.
2. ALL PIPES AND FITTINGS SHALL BE SDR-26 FROM THE WYE ON THE MAIN TO THE CLEAN-OUT.

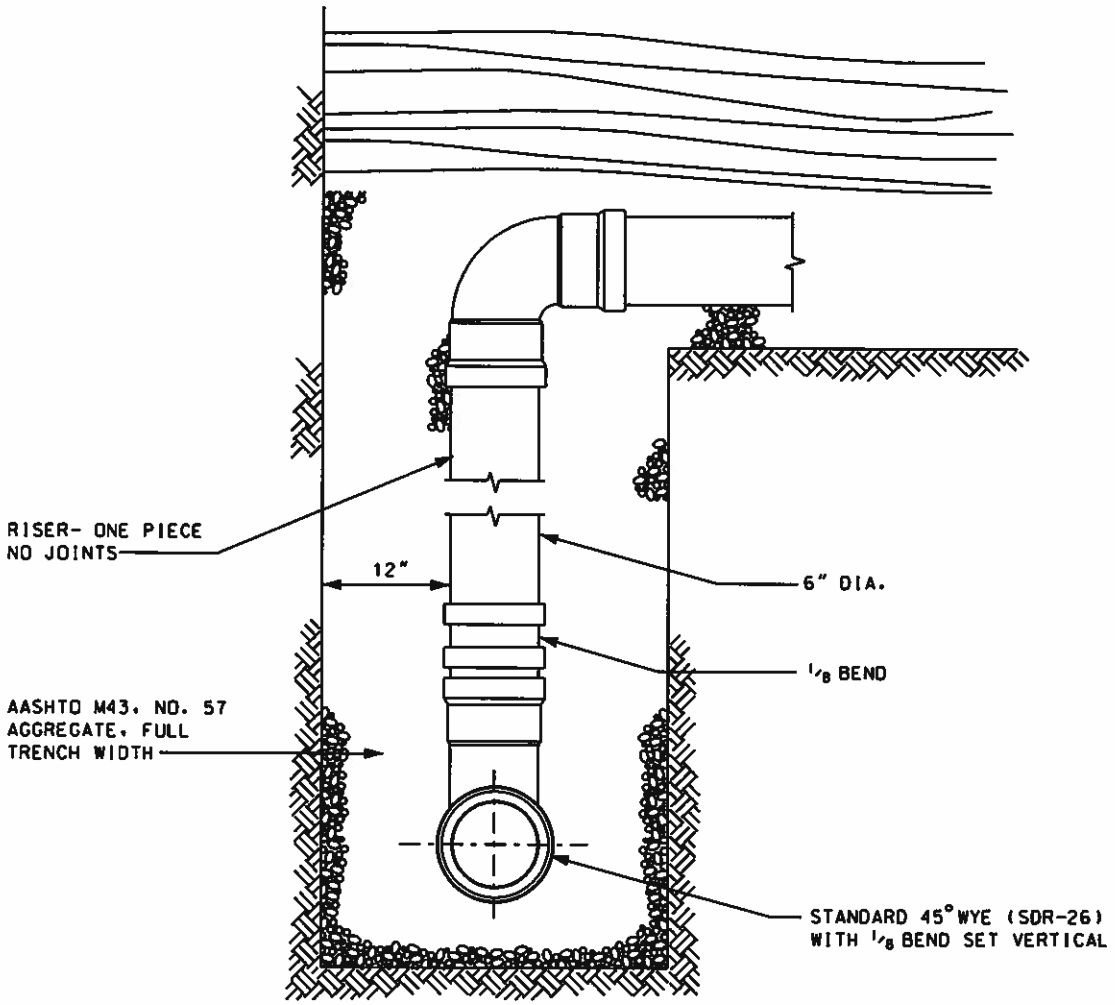

SECTION

NO SCALE

HARFORD COUNTY, MD
DEPARTMENT OF
PUBLIC WORKS

Robert B Cooper

STANDARD SEWER DETAILS

PVC DROP HOUSE
SERVICE CONNECTION
AT MAIN

ISSUED 7/1/98
REVISED 3/15/09
REVISED 4/16/10

PLATE S-21

NOTES:

1. TRENCH TO BE COMPACTED IN ACCORDANCE WITH STANDARD SPECIFICATIONS.
2. ALL PIPES AND FITTINGS SHALL BE DUCTILE IRON FROM THE WYE ON THE MAIN TO THE CLEAN-OUT.
3. THE SEWER MAIN BETWEEN MANHOLES TO WHICH THIS CONNECTION IS MADE SHALL BE EITHER DUCTILE IRON OR C900 PVC PIPE.

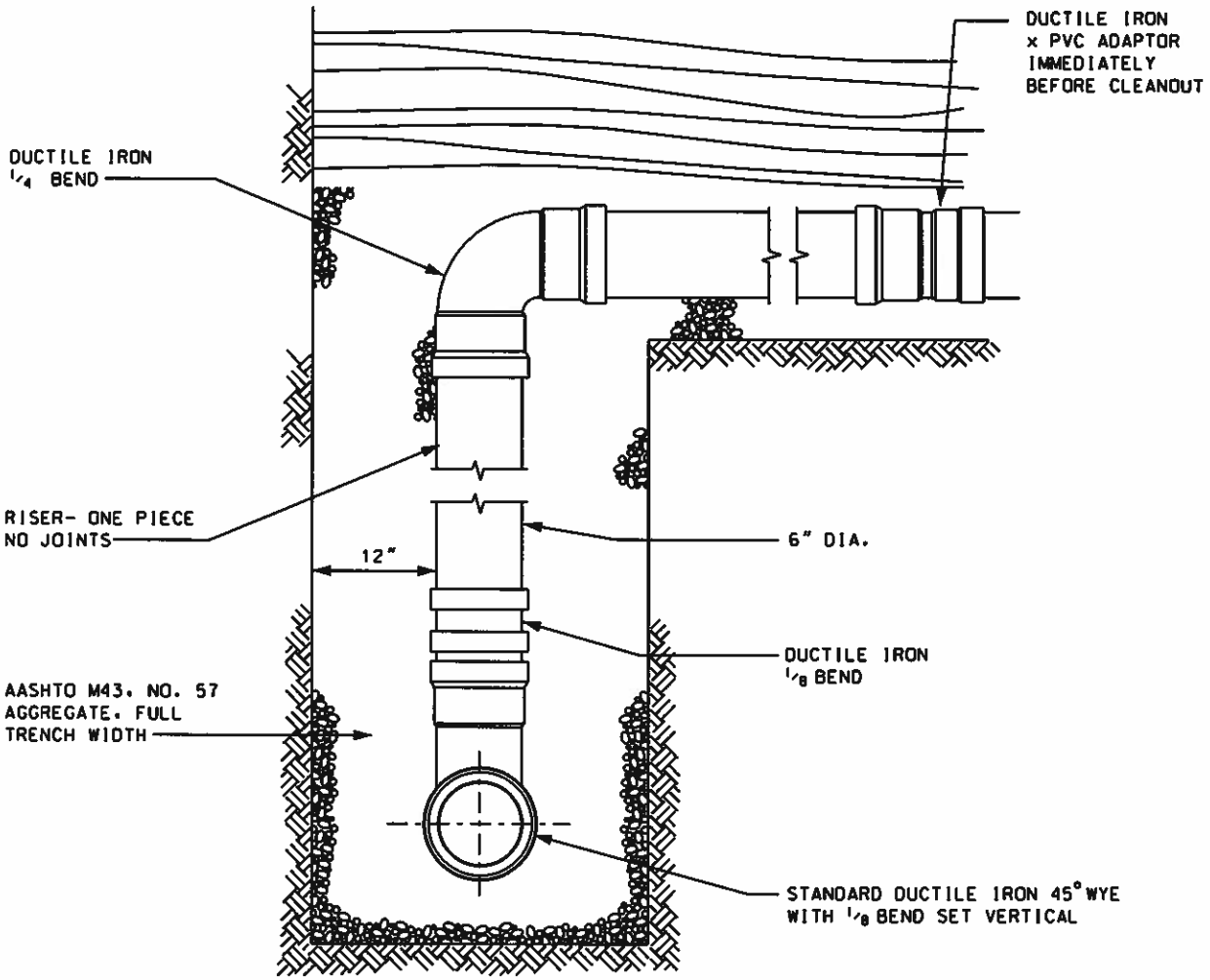

SECTION

NO SCALE

HARFORD COUNTY, MD
DEPARTMENT OF
PUBLIC WORKS

Robert B. Cooper

STANDARD SEWER DETAILS

DUCTILE IRON DROP HOUSE SERVICE CONNECTION AT MAIN

ISSUED 4/16/10
REVISED
REVISED

PLATE S-21A

ELEVATION

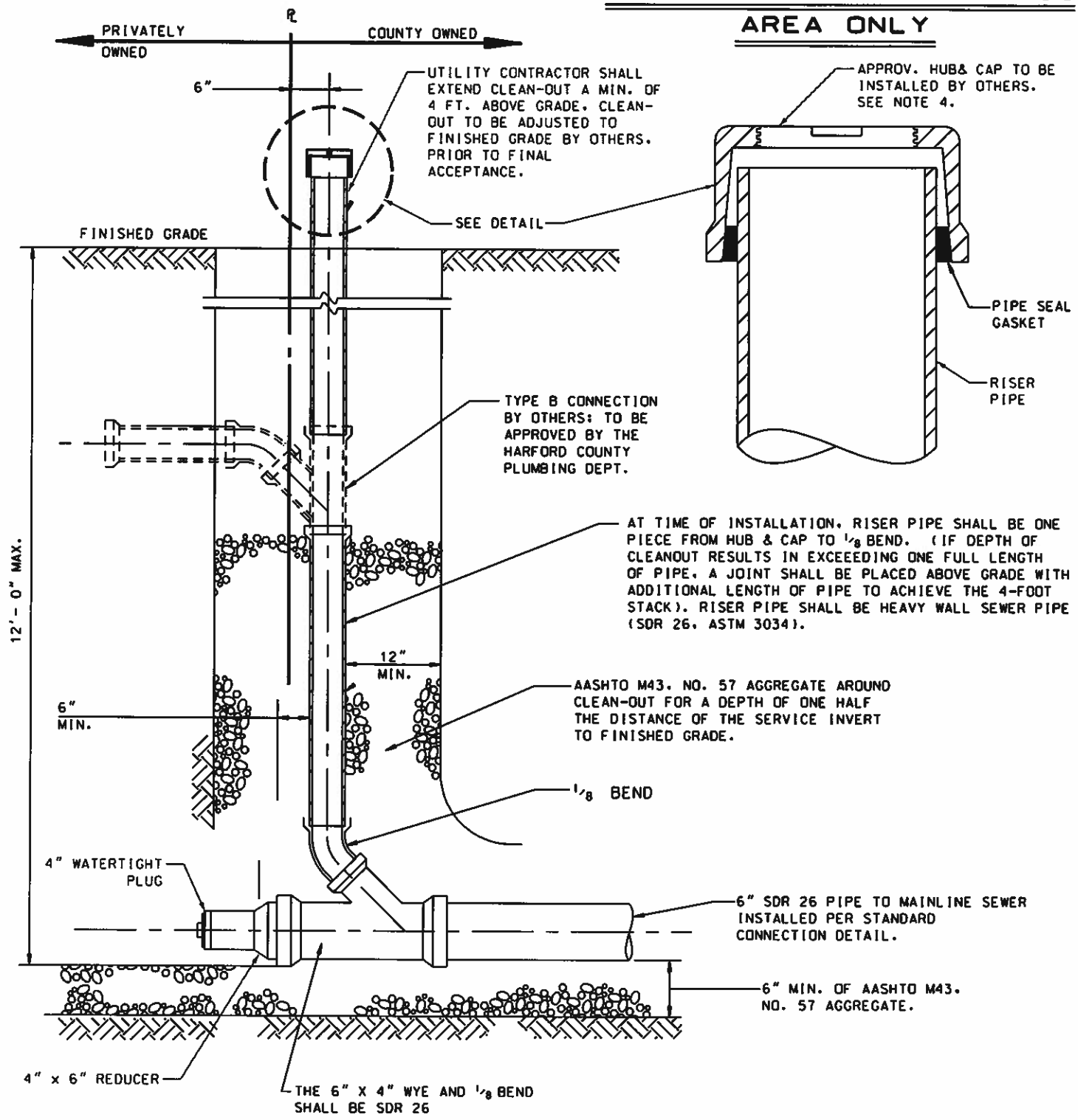

DETAIL FOR NON-TRAFFIC AREA ONLY

NOTES:

1. ALL PIPE AND FITTINGS SHALL BE SDR 26.
2. CLEAN-OUTS ARE SUBJECT TO AIR TESTS. CONTRACTOR SHALL INSTALL APPROVED TEMPORARY AIR-TIGHT CAP OR PLUG. TAPE IS NOT ALLOWED.
3. ON LOTS WITH EXISTING HOMES, CONTRACTOR SHALL INSTALL APPROVED HUBS AND CAPS FLUSH WITH FINISHED GRADE.
4. CLEANOUTS SHALL NOT BE CONSTRUCTED SO THAT THEY WILL END UP IN SIDEWALKS, STEPS OR DRIVEWAYS.

HARFORD COUNTY, MD
DEPARTMENT OF PUBLIC WORKS

STANDARD SEWER DETAILS

HOUSE SERVICE CONNECTION CLEAN-OUT

ISSUED	7/98
REVISED	5/11/06
REVISED	3/15/09
REVISED	4/16/10
PLATE	S-22

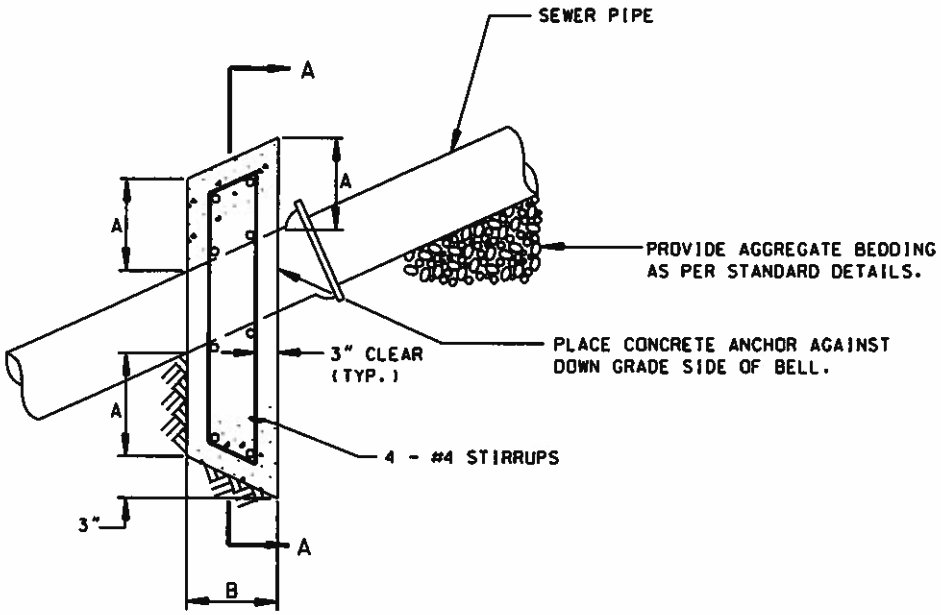

ELEVATION

NO SCALE

NOTES:

1. SEWERS ON 20 PERCENT SLOPES OR GREATER SHALL BE ANCHORED IN ACCORDANCE WITH THE FOLLOWING AND IN ACCORDANCE WITH THE CONTRACT DOCUMENTS:
   - GRADES 20% - 35%
     - 20 FT. LENGTH PIPE - ANCHOR AT EACH JOINT
     - 13 FT. LENGTH PIPE - ANCHOR AT EVERY OTHER JOINT.
     - ANCHOR SPACING SHALL NOT EXCEED 36 FT.
   - GRADES 36% - 50%
     - 20 FT. LENGTH PIPE - ANCHOR AT EACH JOINT
     - 13 FT. LENGTH PIPE - ANCHOR AT EACH JOINT
     - ANCHOR SPACING SHALL NOT EXCEED 24 FT.
   - GRADES >50%
     - CUSTOM DESIGN
     - ANCHOR SPACING SHALL NOT EXCEED 16 FT.
2. CARRY ALL BEARING SURFACES TO SOLID GROUND.
3. IF UNSUITABLE SOIL CONDITIONS ARE ENCOUNTERED DURING CONSTRUCTION. ADDITIONAL ANCHORS MAY BE REQUIRED.

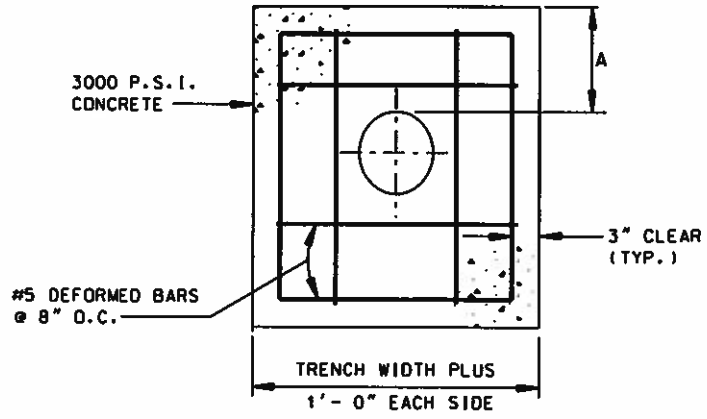

SECTION A-A

NO SCALE

DIMEN. / DIA.	A	B
8"	1'- 0"	1'- 0"
12"	1'- 0"	1'- 0"
15"	1'- 3"	1'- 3"

MINIMUM DIMENSIONS

HARFORD COUNTY, MD
DEPARTMENT OF
PUBLIC WORKS

Robert B Cooper

STANDARD SEWER DETAILS

CONCRETE ANCHORS

ISSUED 7/98
REVISED 4/17/01
REISSUED 3/15/09

PLATE S-23

HEAVY TRAFFIC BEARING LAMPHOLE FRAME & COVER

COVER WEIGHT - 39 LBS. MIN.
FRAME WEIGHT - 129 LBS. MIN.

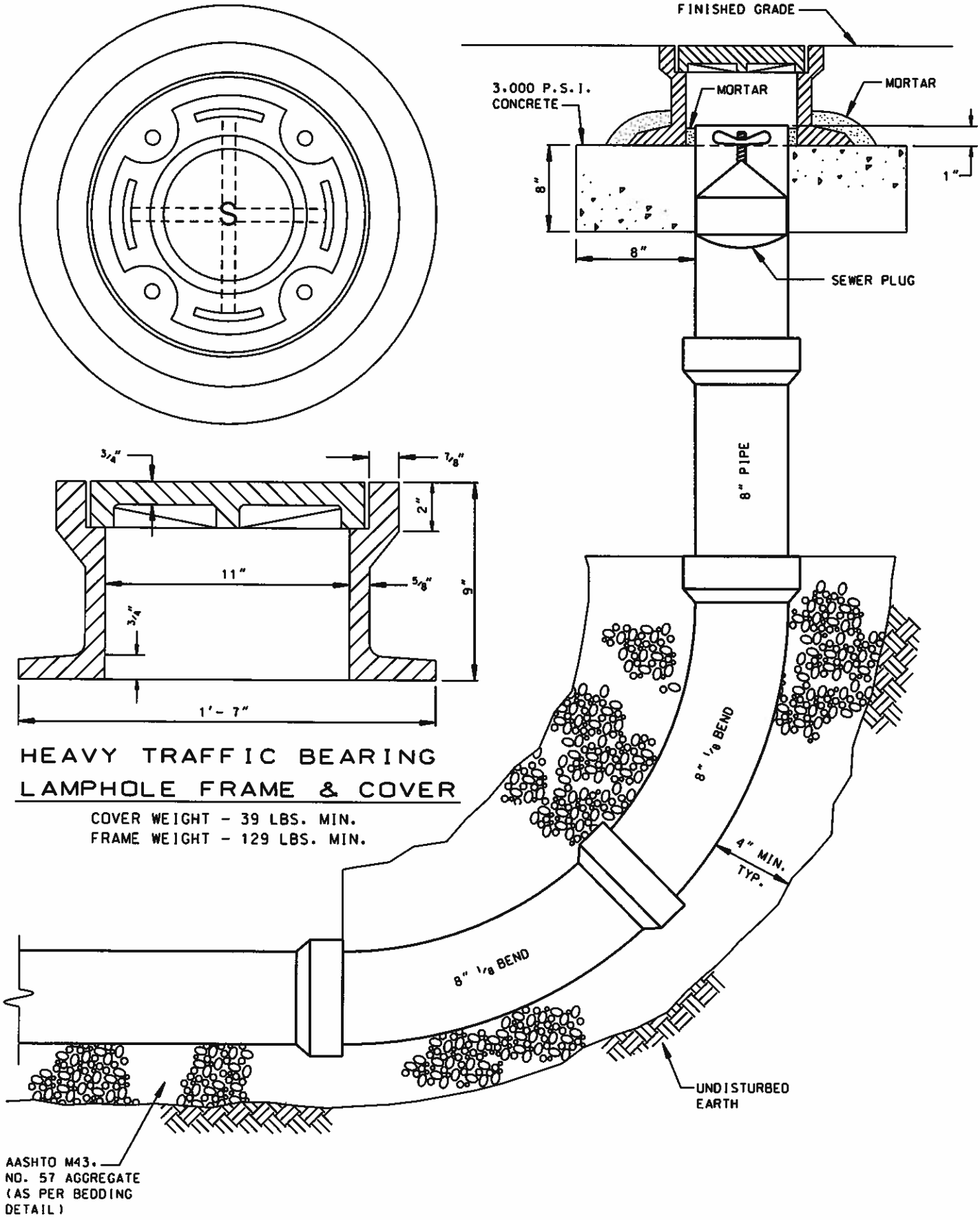

HARFORD COUNTY, MD
DEPARTMENT OF PUBLIC WORKS

STANDARD SEWER DETAILS

LAMPHOLE

ISSUED	4/17/01
REVISED	3/15/09
REVISED	4/16/10

PLATE S-24

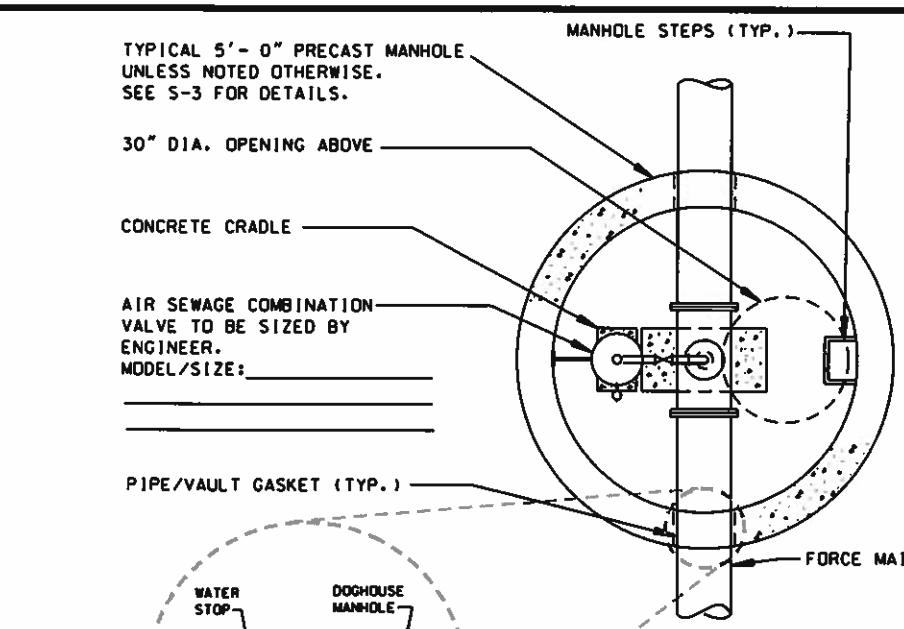

PLAN
NO SCALE

NOTES:

1. ALL FITTINGS BELOW AIR VALVE TO BE HEAVY DUTY THREADED. UNPOLISHED BRASS UNLESS NOTED OTHERWISE.
2. ALL PIPE SUPPORTS AND BRACING TO BE SIZED BY ENGINEER.
3. SET MANHOLE ON 6" LEVELING COURSE OF AASHTO M43, NO. 57 AGGREGATE.
4. VAULTS IN HIGH WATER TABLE AREAS SHALL BE MODIFIED AS REQUIRED BY THE COUNTY.
5. CONTRACTOR MAY USE PRECAST DOGHOUSE TYPE MANHOLE RISER SECTION WITH APPROVED PIPE/ VAULT GASKETS AND CAST-IN-PLACE BASE.
6. MIN. VAULT HEIGHT SHALL BE 6'- 6" MEASURED FROM FLOOR TO CEILING.
7. AN ACCEPTABLE ALTERNATIVE TO THE 90° BEND AND BALL VALVE CURBSTOP IS AN ANGLE BALL SERVICE VALVE.

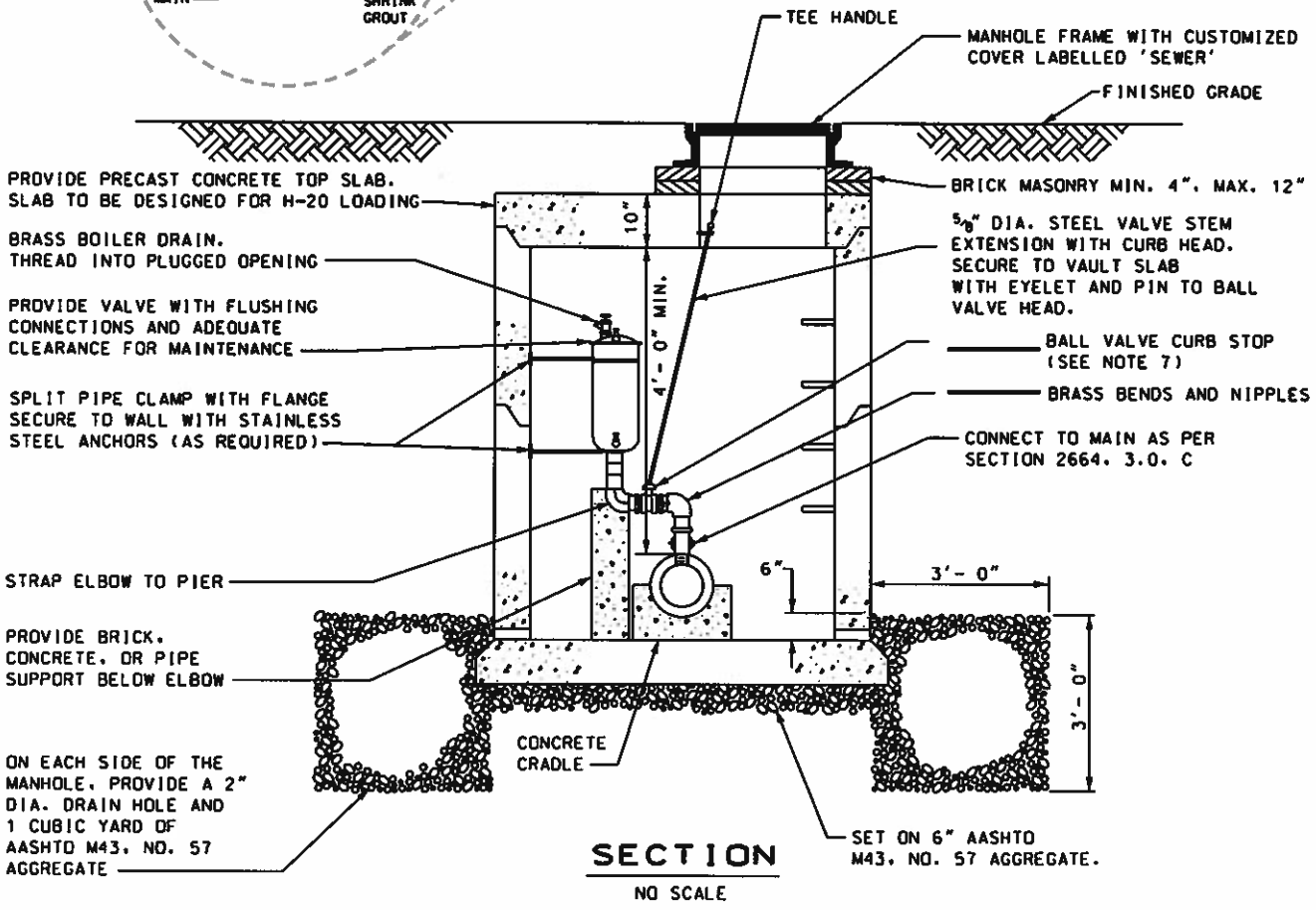

SECTION
NO SCALE

HARFORD COUNTY, MD
DEPARTMENT OF PUBLIC WORKS

STANDARD SEWER DETAILS

SEWAGE COMBINATION AIR VALVE IN MANHOLE

ISSUED	7/98
REVISED	4/17/01
REVISED	11/26/03
REVISED	5/11/06
REVISED	3/15/09
REVISED	4/16/10

PLATE S-25

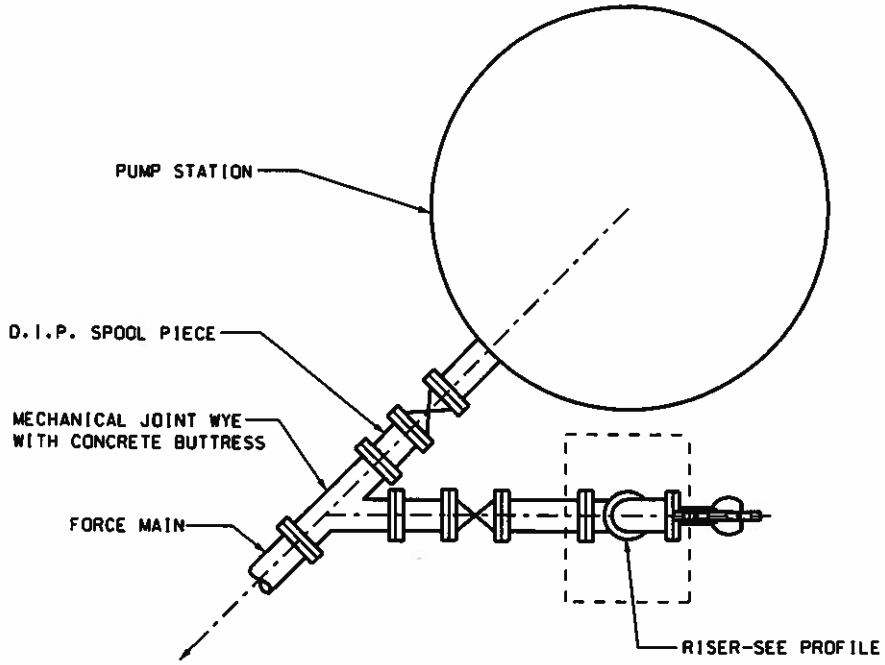

PLAN
NO SCALE

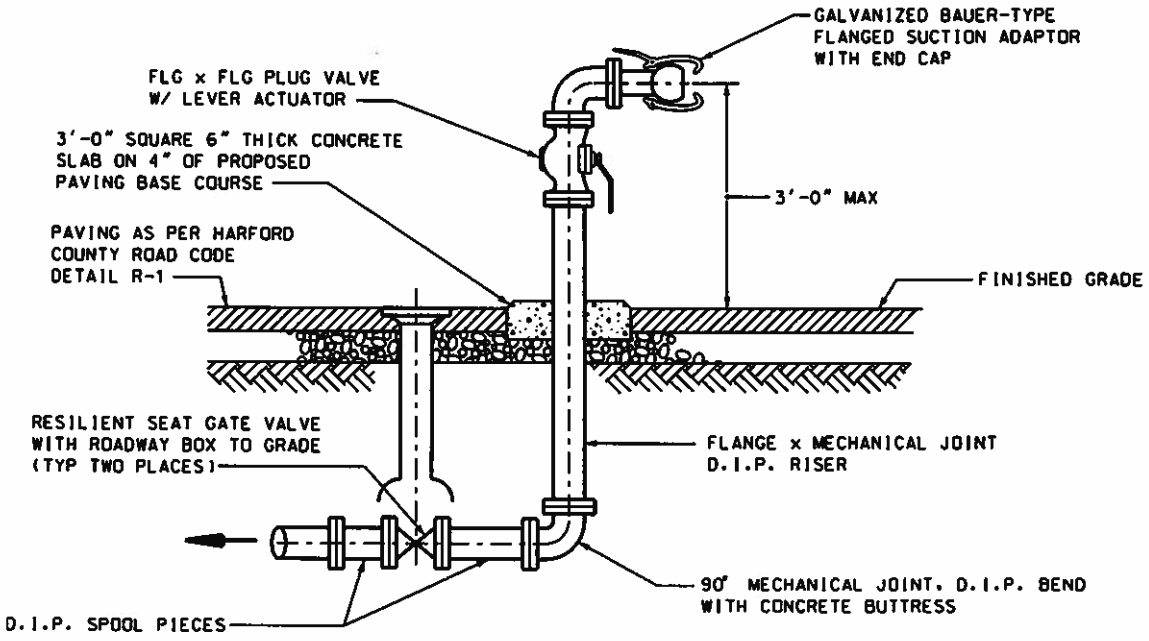

PROFILE
NO SCALE

NOTES:

1. THIS DETAIL IS FOR CONCEPT ONLY. PIPE LOCATION AND SIZES WILL BE AS DESIGNED BY THE ENGINEER, AND APPROVED BY THE DIVISION OF WATER AND SEWER.
2. ALL BURIED JOINTS SHOWN IN THIS DETAIL SHALL HAVE MECHANICAL JOINT RESTRAINTS AND BUTTRESSES.

HARFORD COUNTY, MD
DEPARTMENT OF
PUBLIC WORKS

STANDARD SEWER DETAILS

PUMP AROUND

ISSUED 7/1/98
REVISED 3/15/09
REVISED

PLATE S-26

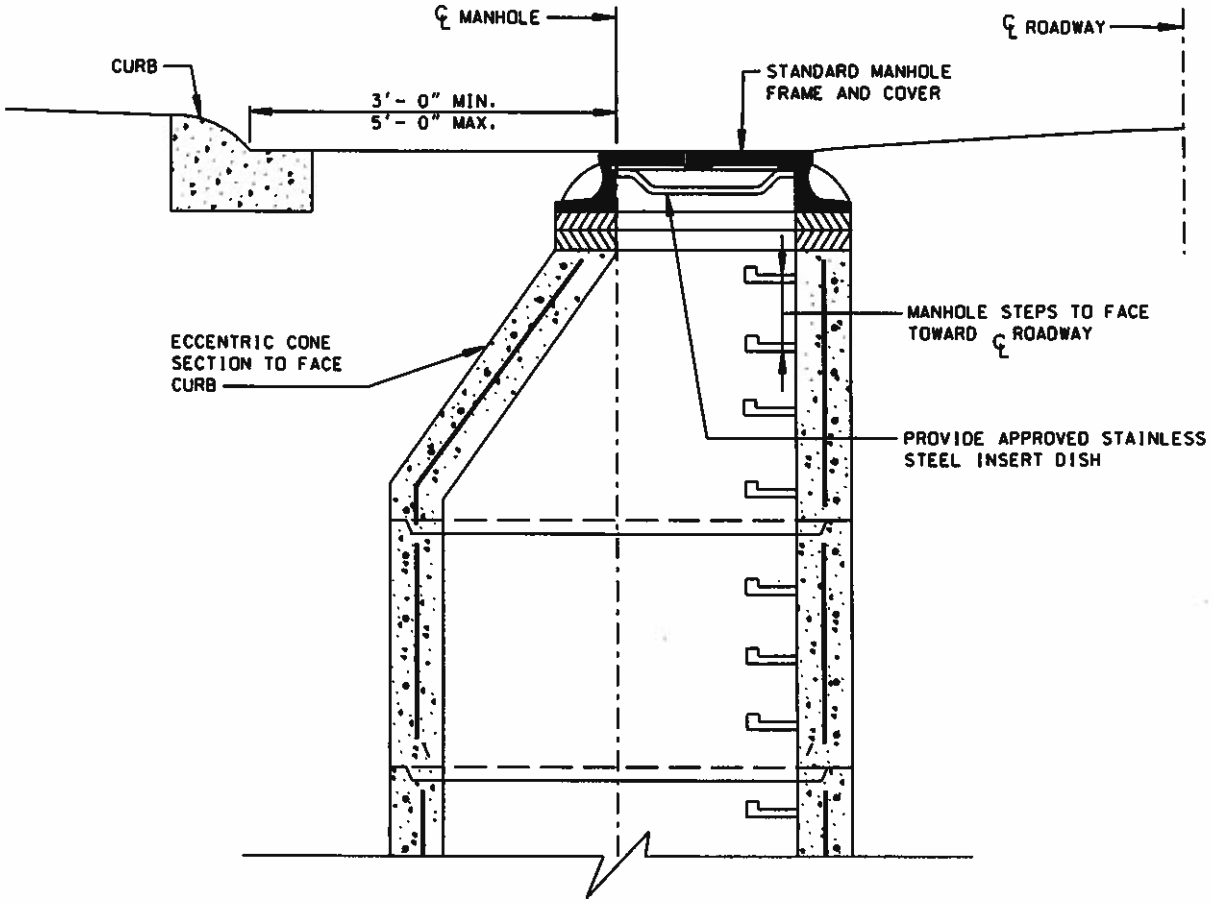

HARFORD COUNTY, MD
DEPARTMENT OF
PUBLIC WORKS

Robert B. Cooper

STANDARD SEWER DETAILS

PRECAST MANHOLE SETTING
WITHIN 5 L.F. OF FACE OF CURB

ISSUED	7/98
REVISED	4/17/01
REISSUED	3/15/09

PLATE S-27

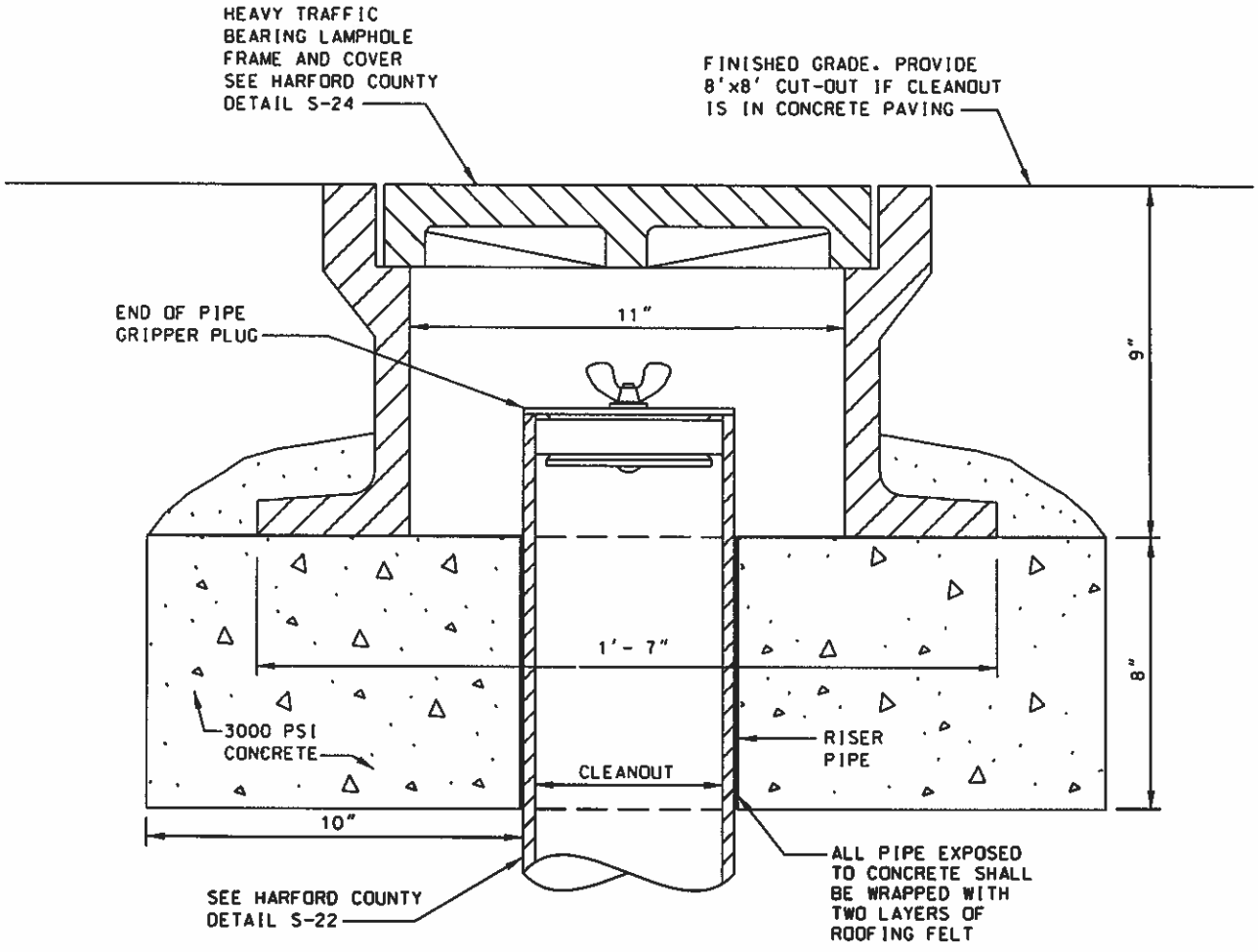

SECTION

NOTES:

1. THIS DETAIL PERTAINS TO BUSINESS, COMMERCIAL OR INDUSTRIAL APPLICATIONS AND AS OTHERWISE APPROVED. IF LOCATED IN CONCRETE PAVING, THE CLEAN-OUT SHALL BE ENCASED IN A 24" x 24" AREA BOXED OUT WITH EXPANSION JOINT MATERIAL.

HARFORD COUNTY, MD
DEPARTMENT OF
PUBLIC WORKS

STANDARD SEWER DETAILS

SANITARY CLEANOUT
IN PAVING

ISSUED	4/17/01
REVISED	11/26/03
REVISED	3/15/09
REVISED	4/16/10
PLATE	S-28

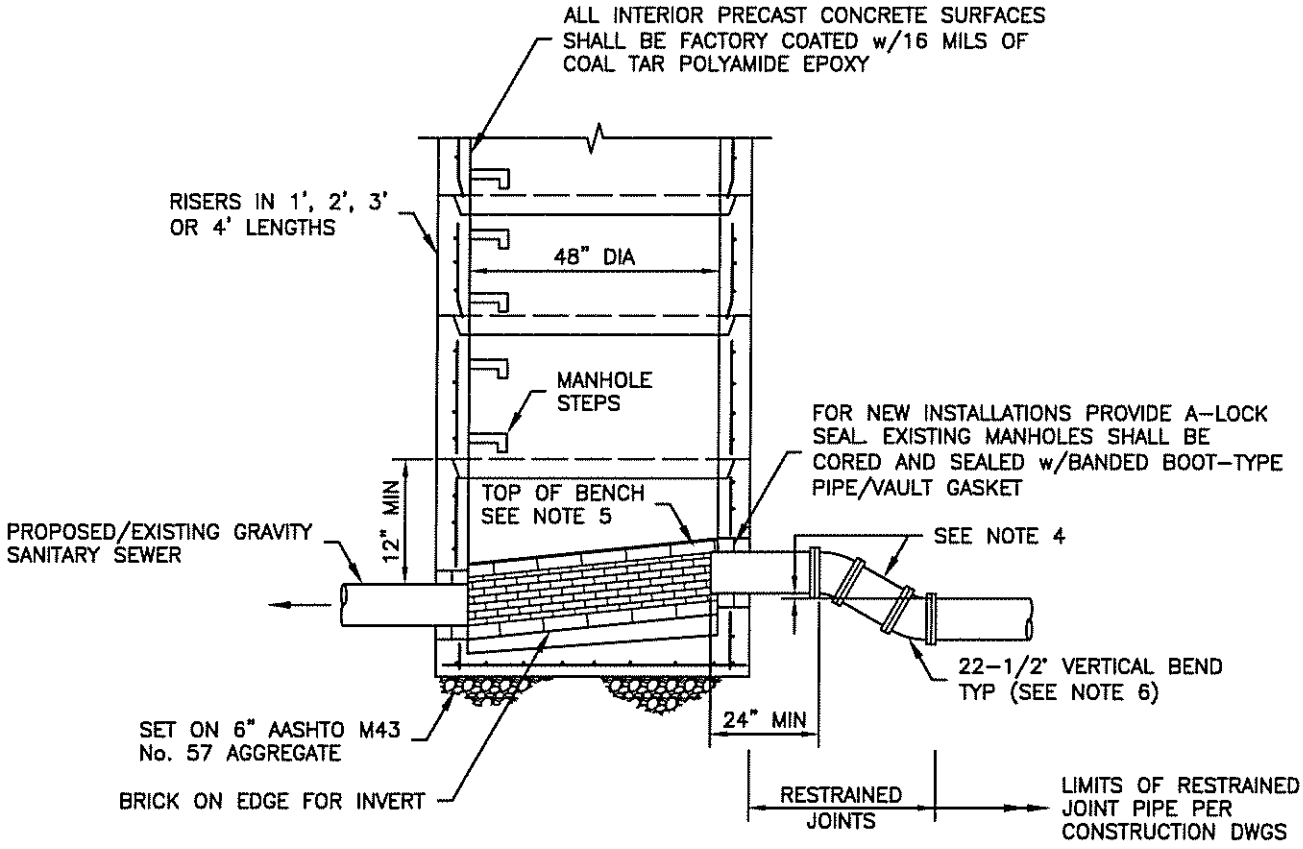

48" TYPE A-2

NOTES:

1. EXCEPT AS NOTED, MANHOLE TAPERS, RISERS AND BASES SHALL BE FURNISHED IN STRICT ACCORDANCE WITH ASTM DESIGNATION C478 (LATEST) FOR PRECAST REINFORCED CONCRETE MANHOLE SECTIONS.
2. WHEN TYING INTO AN EXISTING MANHOLE, RECHANNEL BENCH PER COUNTY STANDARDS.
3. PROVIDE CARBON ODOR CONTROL DISH.
4. INVERT OF PIPE TERMINUS SHALL BE EQUAL TO OR HIGHER IN ELEVATION THEN FORCE MAIN PRIOR TO THE FIRST 22-1/2° BEND. THE LENGTH OF SPOOL PIECE BETWEEN BENDS SHALL BE INDICATED ON THE CONSTRUCTION DRAWINGS TO ENSURE THE PROPER ELEVATIONS NOTED ABOVE.
5. ANCHORS AND BUTTRESSES ARE NOT REQUIRED ON THE VERTICAL BENDS SHOWN UNLESS SPECIFIED IN THE CONSTRUCTION DOCUMENTS.
6. THE TOP OF THE BENCH SHALL BE SLOPED TOWARDS THE CHANNEL. THE DIFFERENCE BETWEEN EDGE OF THE MANHOLE AND EDGE OF THE CHANNEL SHALL BE NO LESS THAN TWO COURSES OF BRICK.
7. THE SECOND FITTING MAY NOT BE NECESSARY IF THE CONSTRUCTION DRAWINGS INDICATE THIS CONDITION. GENERALLY THE FIRST FITTING MAY NOT BE NECESSARY (AS DETERMINED BY THE DIVISION OF WATER AND SEWER) IF THE APPROACHING GRADE OF THE FORCE MAIN DOES NOT REQUIRE THE FITTING.
8. TESTING OF THE FORCE MAIN SHALL BE PERFORMED AFTER THE BRICK CHANNEL AND BENCH HAVE BEEN COMPLETED.

HARFORD COUNTY, MD DEPARTMENT OF PUBLIC WORKS	STANDARD SEWER DETAILS FORCE MAIN DISCHARGE MANHOLE (FOR 4" DIA. PIPE AND GREATER)	ISSUED 05/11/06 REVISED 11/10/14 PLATE S-29

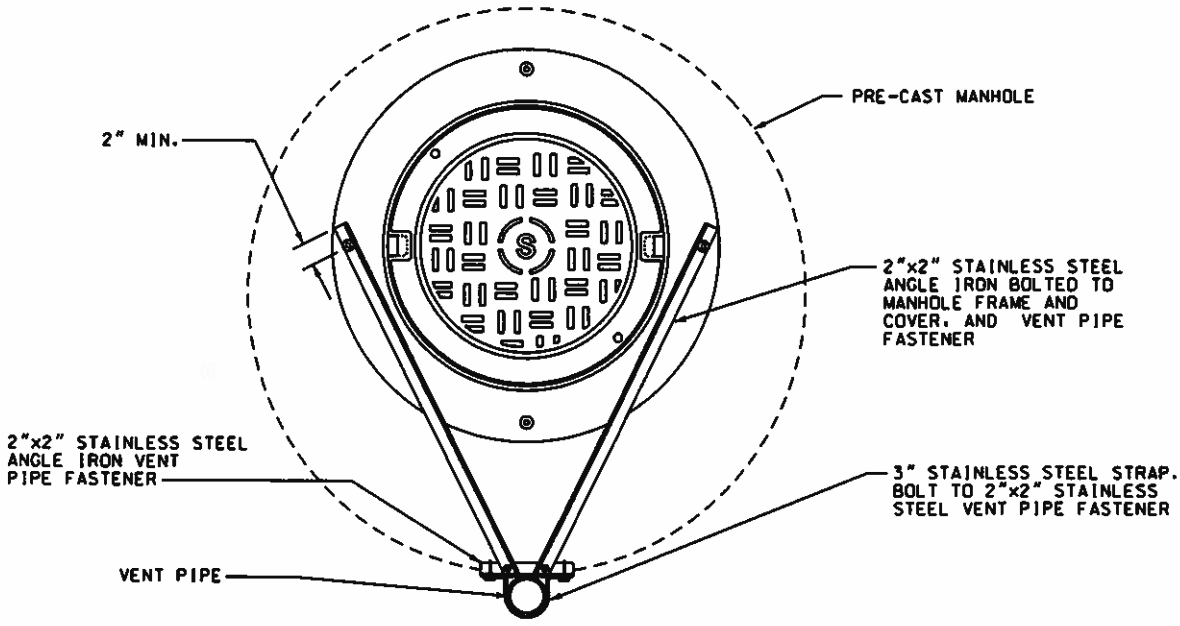

SECTION A-A

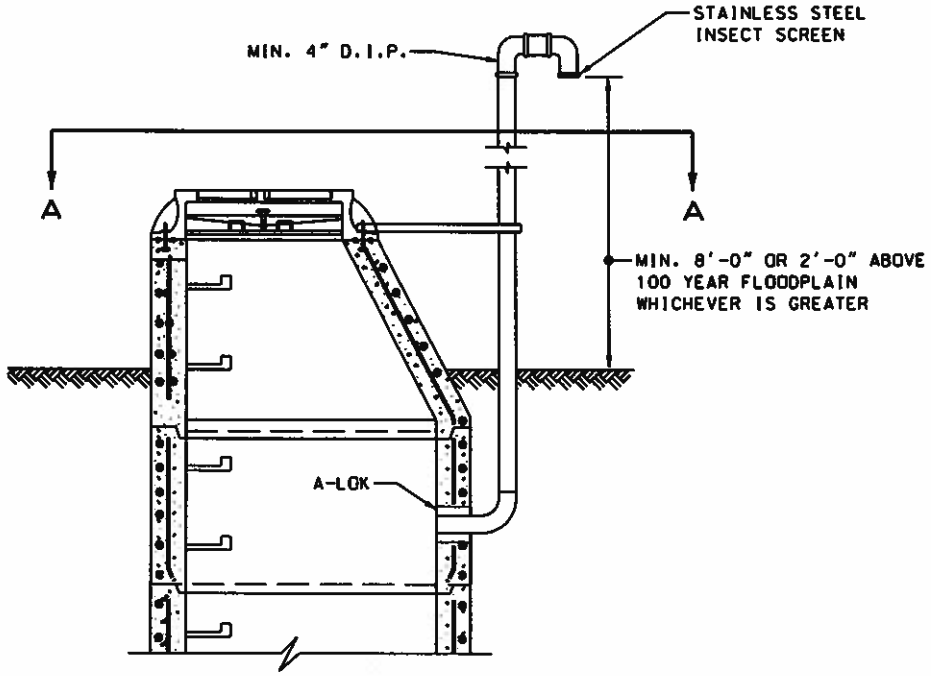

NOTES:

1. VENT PIPE SHALL BE INSTALLED PLUMB.
2. VENT PIPE SHALL BE INSTALLED ON THOSE MANHOLES SHOWN ON THE PLANS.
3. ALL HARDWARE SHALL BE STAINLESS STEEL.

HARFORD COUNTY, MD
DEPARTMENT OF
PUBLIC WORKS

STANDARD SEWER DETAILS

MANHOLE VENT

ISSUED 3/15/09
REVISED
REVISED

PLATE S-30

NOTES:

1. FOR SEWERS 18" AND SMALLER DIAMETER, DISCONNECT SEWER AS SHOWN. INSERT MECHANICAL PLUGS AND PLACE CONCRETE ENCASEMENT.
2. FOR SEWER LARGER THAN 18" INSTALL MASONRY BULKHEAD.
3. RESHAPE AND FILL EXISTING CHANNEL AS NECESSARY TO PROVIDE SMOOTH CONTOUR BETWEEN INCOMING AND OUTGOING PIPES.
4. SEWER PLUGS SHALL BE IN ACCORDANCE WITH SECTION 02050 AND APPROVED MATERIALS LIST.

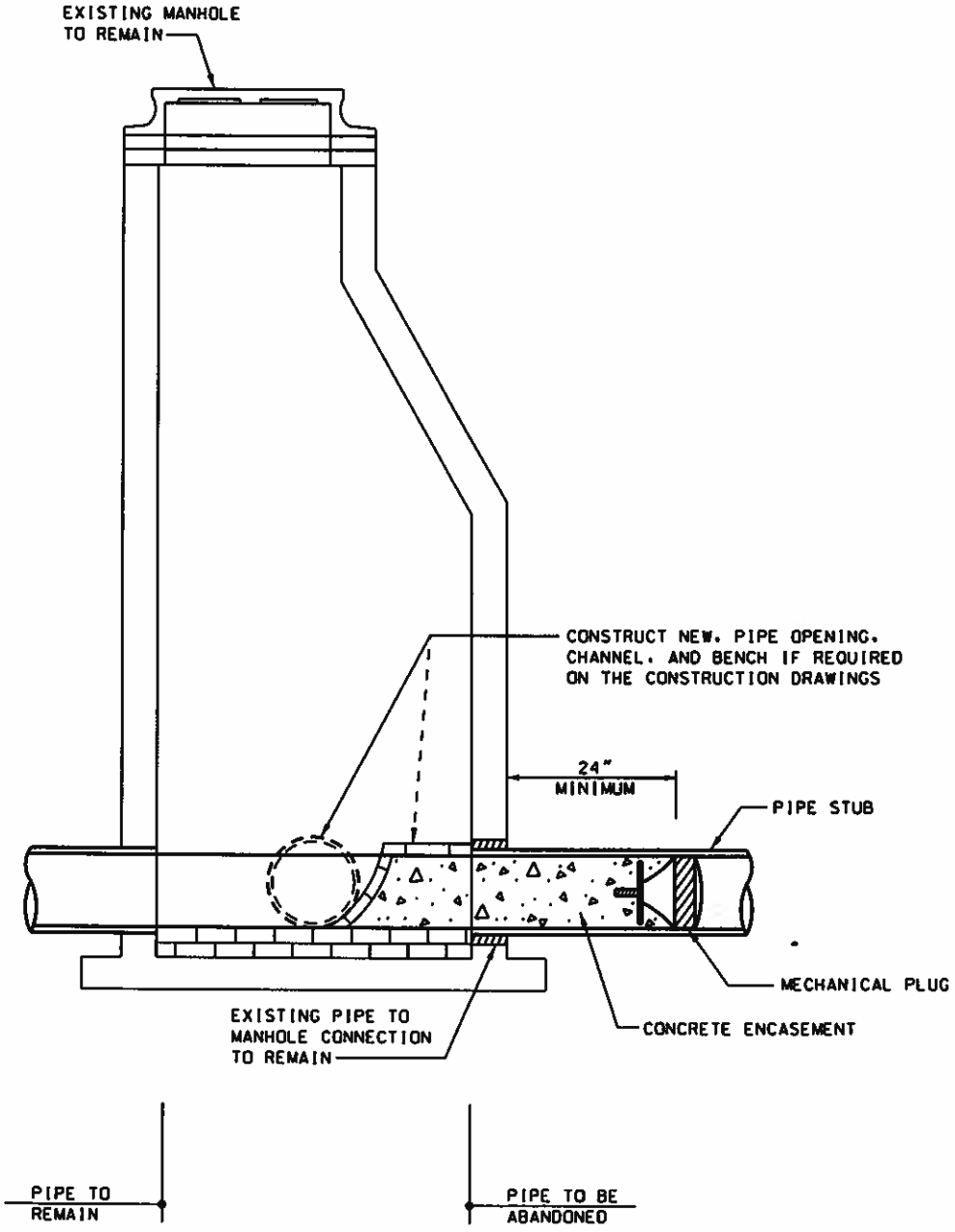

HARFORD COUNTY, MD
DEPARTMENT OF
PUBLIC WORKS

STANDARD SEWER DETAILS

ABANDONMENT OF PIPE
AT MANHOLE

ISSUED 3/15/09
REVISED
REVISED

PLATE S-31

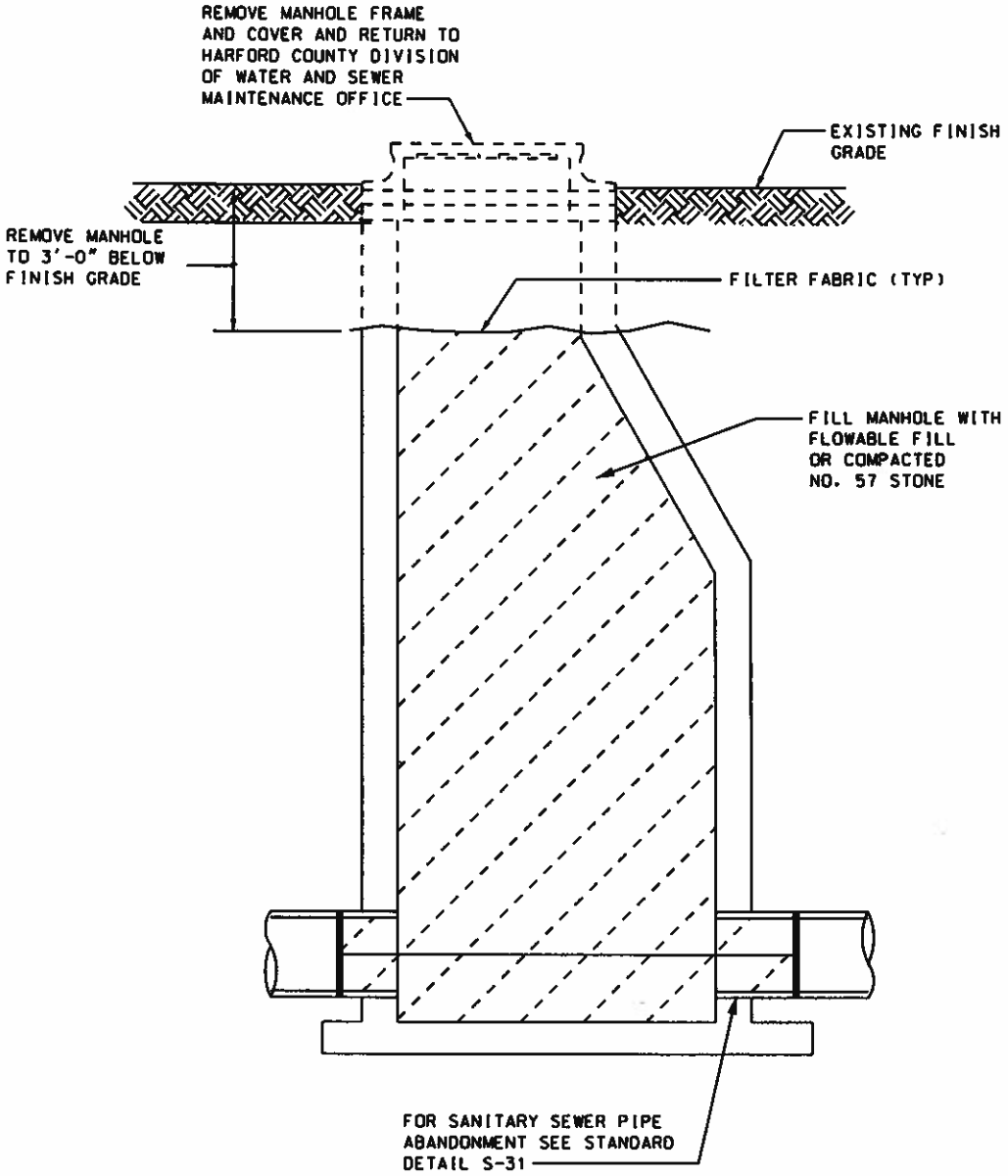

HARFORD COUNTY, MD
DEPARTMENT OF
PUBLIC WORKS

Robert B Cooper

STANDARD SEWER DETAILS

COMPLETE MANHOLE ABANDONMENT

ISSUED 3/15/09
REVISED
REVISED

PLATE S-32

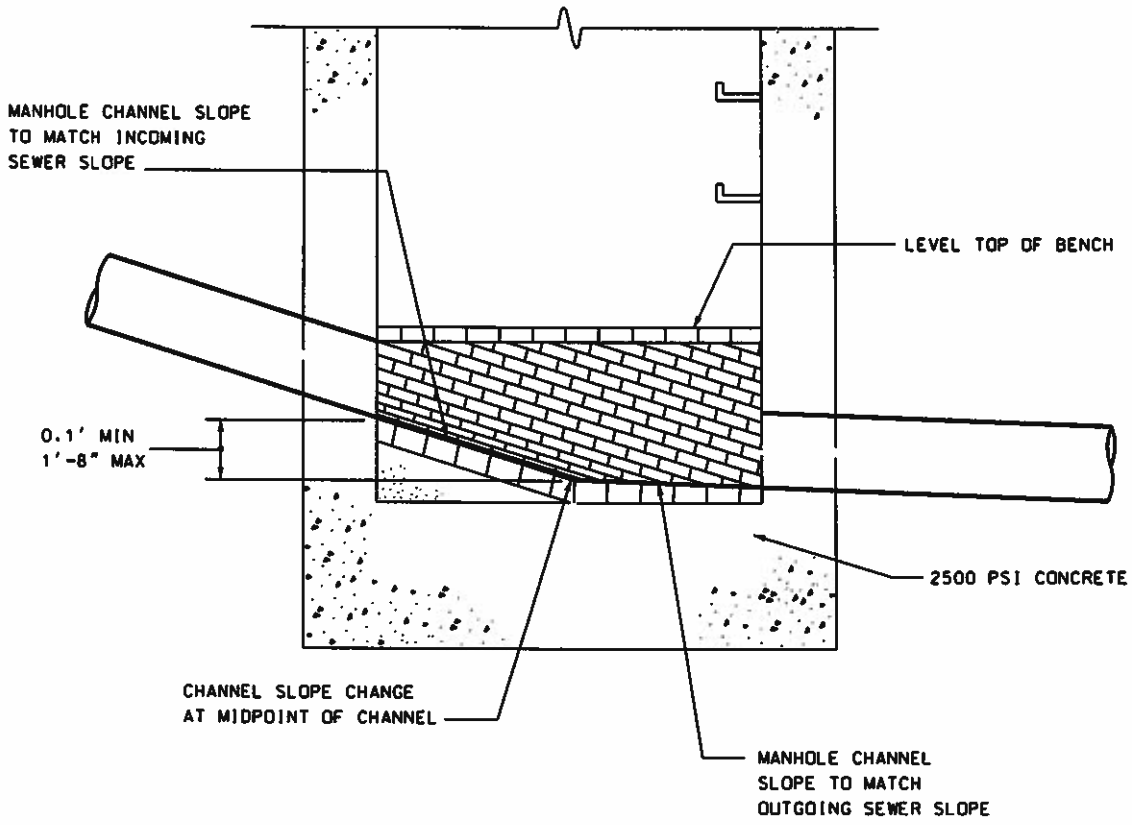

NOTES:

1. INVERT OF INCOMING AND OUTGOING SEWER SHALL BE BASED ON INCOMING SEWER SLOPE ACROSS INTERIOR WIDTH OF MANHOLE.
2. THIS DETAIL PERTAINS TO ALL NEW MANHOLES WITH SEWER SLOPES GREATER THAN 2.5%. MANHOLES WITH SEWER SLOPES 2.5% OR LESS SHALL HAVE STANDARD 0.1' DROP UNLESS OTHERWISE SHOWN ON THE CONSTRUCTION DRAWINGS.
3. MAXIMUM DROP ALLOWED IS 1'-8"

HARFORD COUNTY, MD
DEPARTMENT OF
PUBLIC WORKS

STANDARD SEWER DETAILS

MANHOLE CHANNEL DETAIL
(SEWER SLOPES >2.5%)

ISSUED 3/15/09
REVISED
REISSUED

PLATE S-33

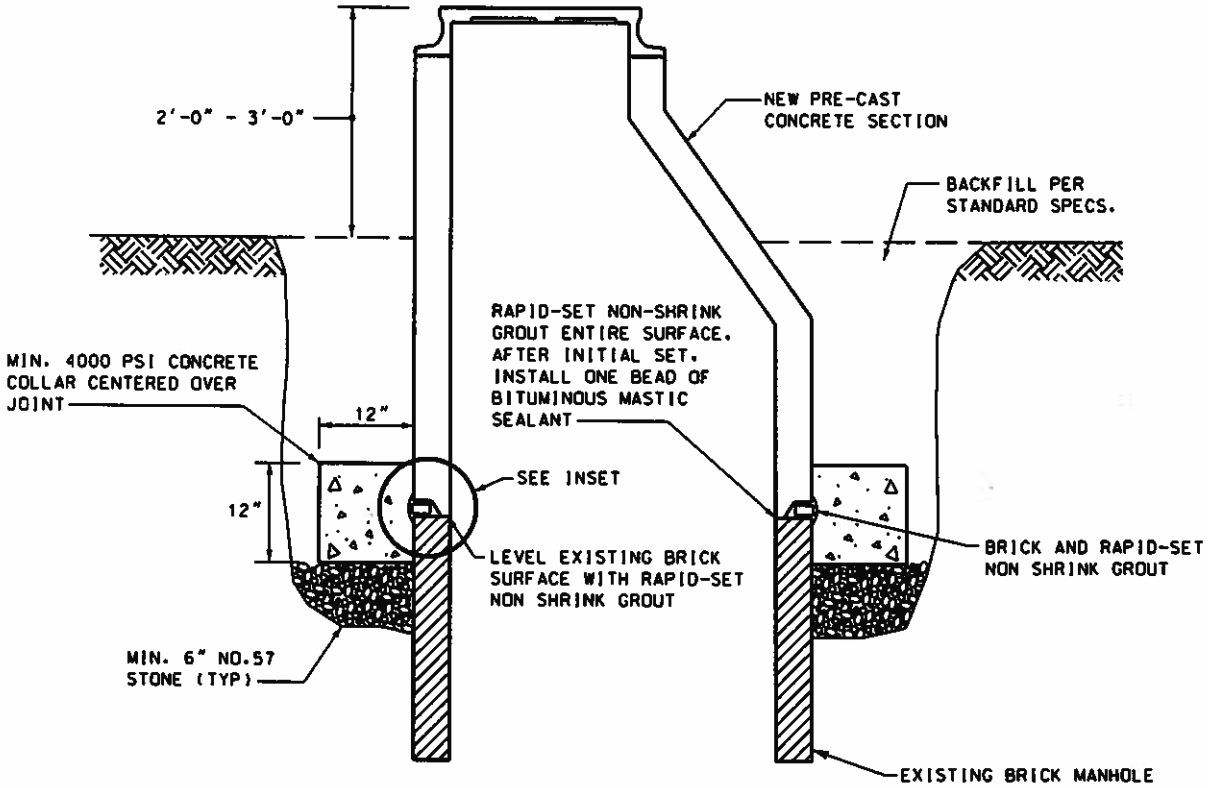

BRICK MANHOLE CONVERSION TO PRE-CAST CONCRETE

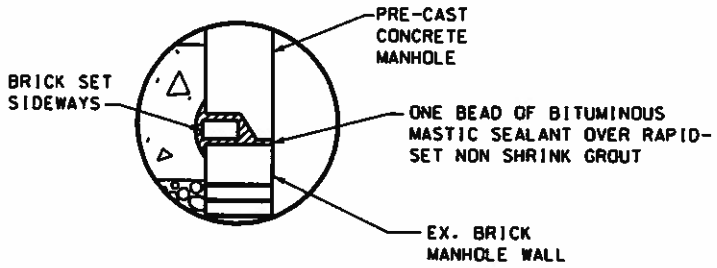

NOTES:

1. PRIOR TO BEGINNING WORK, CONTRACTOR SHALL PLACE PLYWOOD OVER ENTIRE CHANNEL TO PREVENT DEBRIS FROM ENTERING. ALL DEBRIS SHALL BE CLEANED FROM PLYWOOD AND PLYWOOD SHALL BE REMOVED UPON COMPLETION.
2. SUGGESTED METHOD OF CUTTING MANHOLE: AT MORTAR JOINT, USING HAMMER-DRILL, DRILL COMPLETELY THROUGH MANHOLE WALL APPROXIMATELY EVERY TWO FEET. ON EXTERIOR OF MANHOLE USE STRINGLINE FROM DRILLED HOLES TO SAW-CUT BETWEEN EXTERIOR DRILL HOLES. USE SLEDGE HAMMER TO DRIVE SEVERAL SPIKES INTO EXTERIOR SAW-CUT UNTIL BRICKWORK AT CUT "SNAPS" AROUND MANHOLE CIRCUMFRENCE. LIFT APART CONICAL BRICK SECTION.
3. THERE SHALL BE NO VISIBLE LEAKAGE UPON COMPLETION OF MANHOLE CONVERSION.

HARFORD COUNTY, MD
DEPARTMENT OF PUBLIC WORKS

STANDARD SEWER DETAILS

BRICK MANHOLE CONVERSION TO PRE-CAST CONCRETE

ISSUED 3/15/09
REVISED
REVISED

PLATE S-34

STANDARD LOW PRESSURE SEWER DETAILS

TABLE OF CONTENTS

DESCRIPTION	ISSUED
LP1 - Pipe Bedding	11/26/03
LP2 - Isolation Valve Assembly	11/10/14
LP3 - Terminal Flushing Connection	3/15/09
LP4 - Service Valve Assembly	3/15/09
LP5 - Inline Flushing Connection	3/15/09
LP6 - Buttresses	11/26/03
LP7 - Pipe Anchors	7/26/03
LP8 - Cap and Plug Blocking	11/26/03
LP9 - Connection at Manhole	11/10/14
LP10 - Service Valve Assembly to Pressure Main Connection	3/15/09
LP11 - Grinder Pump Location for Simplex Pumps	3/15/09
LP12 - Grinder Pump Location for Duplex Pumps	3/15/09
LP13 - Anti-Float Collar	3/15/09
LP14 - Grinder Pump Backfill	11/26/03
LP15 - Grinder Pump Electric Service	3/15/09
LP16 - New Service Entrance Wiring Diagram	11/26/03
LP17 - Control Panel	11/26/03
LP18 - Simplex Grinder Pump Section	3/15/09
LP19 - Duplex Grinder Pump Section	3/15/09
LP20 - Low Pressure Sewer Air Release Valve (for Mainline up to 2-1/2")	3/15/09

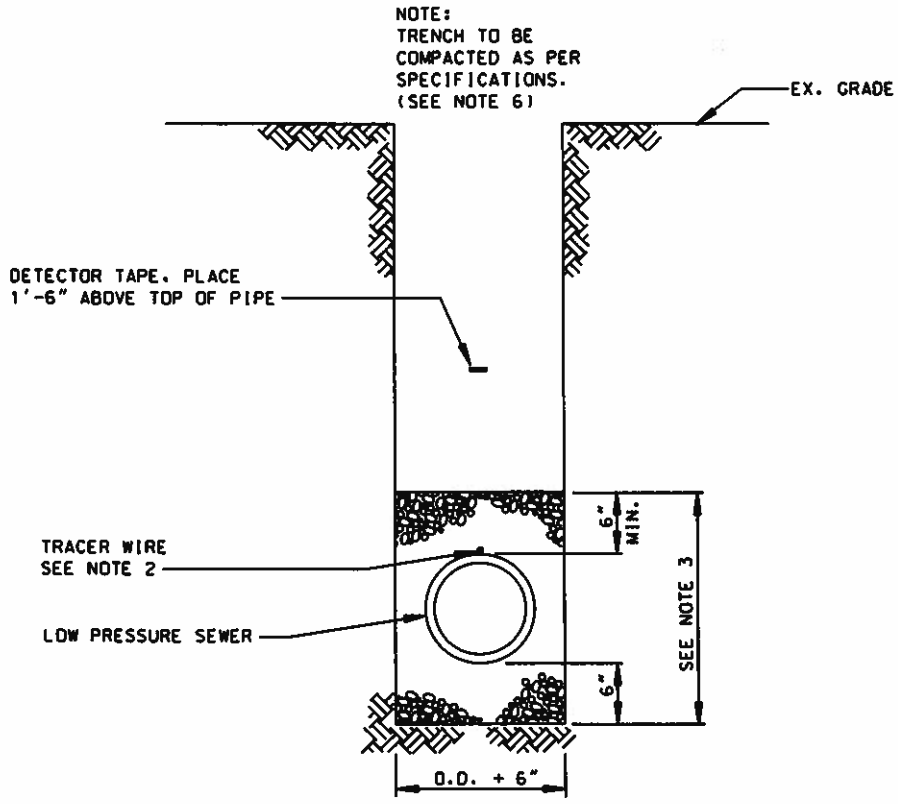

NOTES:

1. ALL ROAD REPAIR SHALL BE AS PER HARFORD COUNTY HIGHWAY DETAILS OR MARYLAND STATE PERMIT DETAILS.
2. PROVIDE TRACER WIRE FOR ALL NON-METALLIC MAINS AND SERVICES.
3. PVC AND HDPE PIPE: SHALL RECEIVE AASHTO M43, NO.57 AGGREGATE OR COMPACTED SAND THAT MEETS THE MARYLAND SHA REQUIREMENTS FOR FINE AGGREGATE.
4. ALL PIPE SHALL BE INSTALLED IN ACCORDANCE WITH THE RECOMMENDATIONS OF THE PIPE MANUFACTURER AND COUNTY STANDARDS.
5. PROVIDE CONTINUOUS BEARING FOR FULL LENGTH OF PIPE. MINIMUM BURY DEPTH IS 3' - 6".
6. ANY TRENCH LESS THAN 18" IN WIDTH, SHALL BE BACKFILLED WITH AASHTO M43, NO. 57 AGGREGATE TO 1'-0" BELOW FINISHED GRADE. THE REMAINING SECTION OF TRENCH SHALL BE BACKFILLED AS PER SPECIFICATIONS.

HARFORD COUNTY, MD
DEPARTMENT OF
PUBLIC WORKS

STANDARD SEWER DETAILS

PIPE BEDDING

ISSUED 11/26/03
REVISED
REISSUED 3/15/09

PLATE LP-1

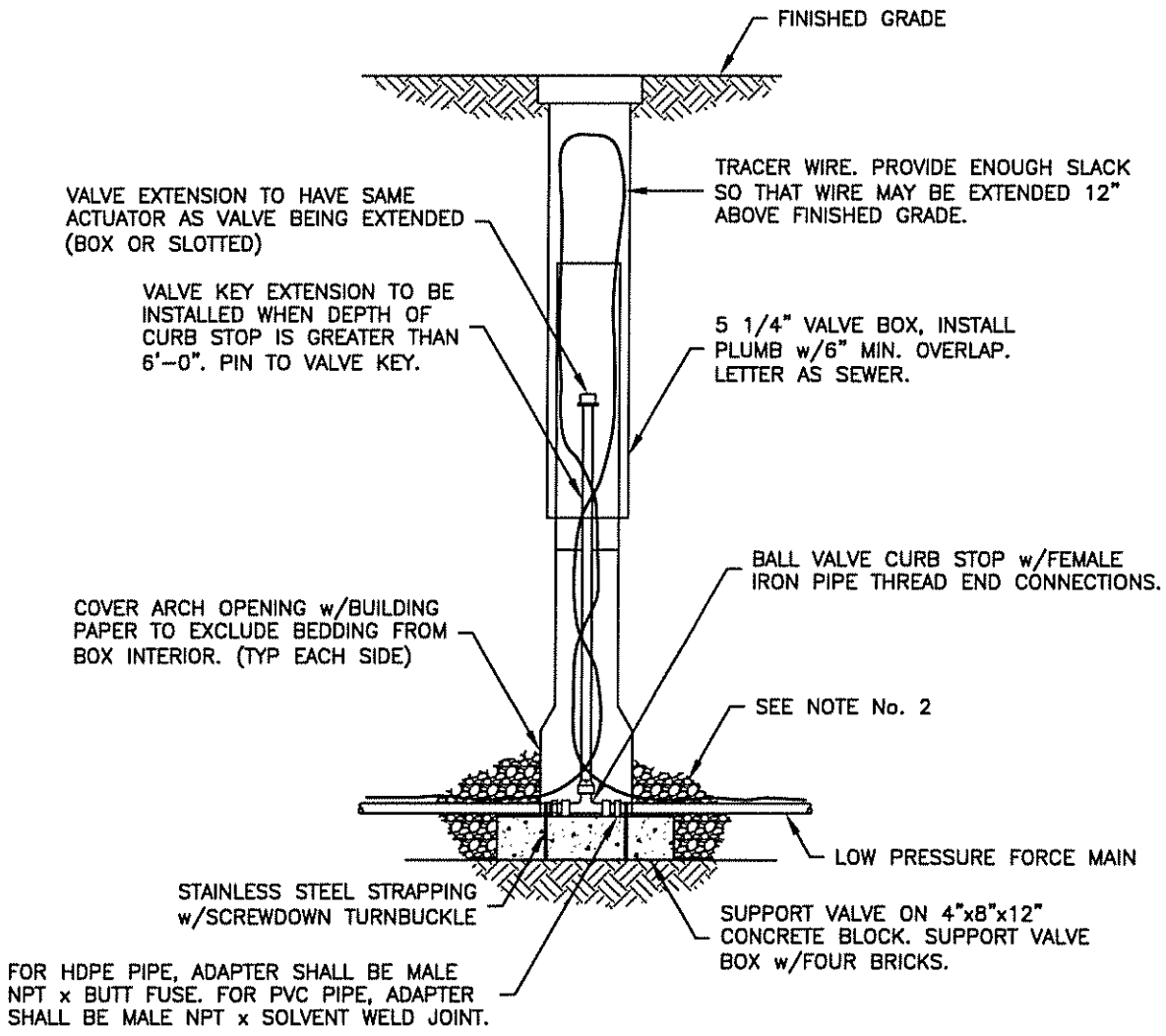

NOTES:

1. PROVIDE ADAPTERS FOR ALL CONNECTIONS BETWEEN PIPE AND FITTING.
2. BACKFILL WITH AASHTO M43, No. 57 AGGREGATE OR COMPACTED SAND, EACH SIDE OF BLOCK AND 6" ABOVE PIPE IN OPEN TRENCH AREAS.
3. FORCE MAINS 3 INCHES AND LARGER, SHALL RECEIVE RESILIENT SEATED GATE VALVES IN-LIEU OF BALL VA;VE CURB STOPS.

HARFORD COUNTY, MD DEPARTMENT OF PUBLIC WORKS	LOW PRESSURE SEWER ISOLATION VALVE ASSEMBLY	ISSUED 11/26/03 REVISED 11/10/14 PLATE LP-2

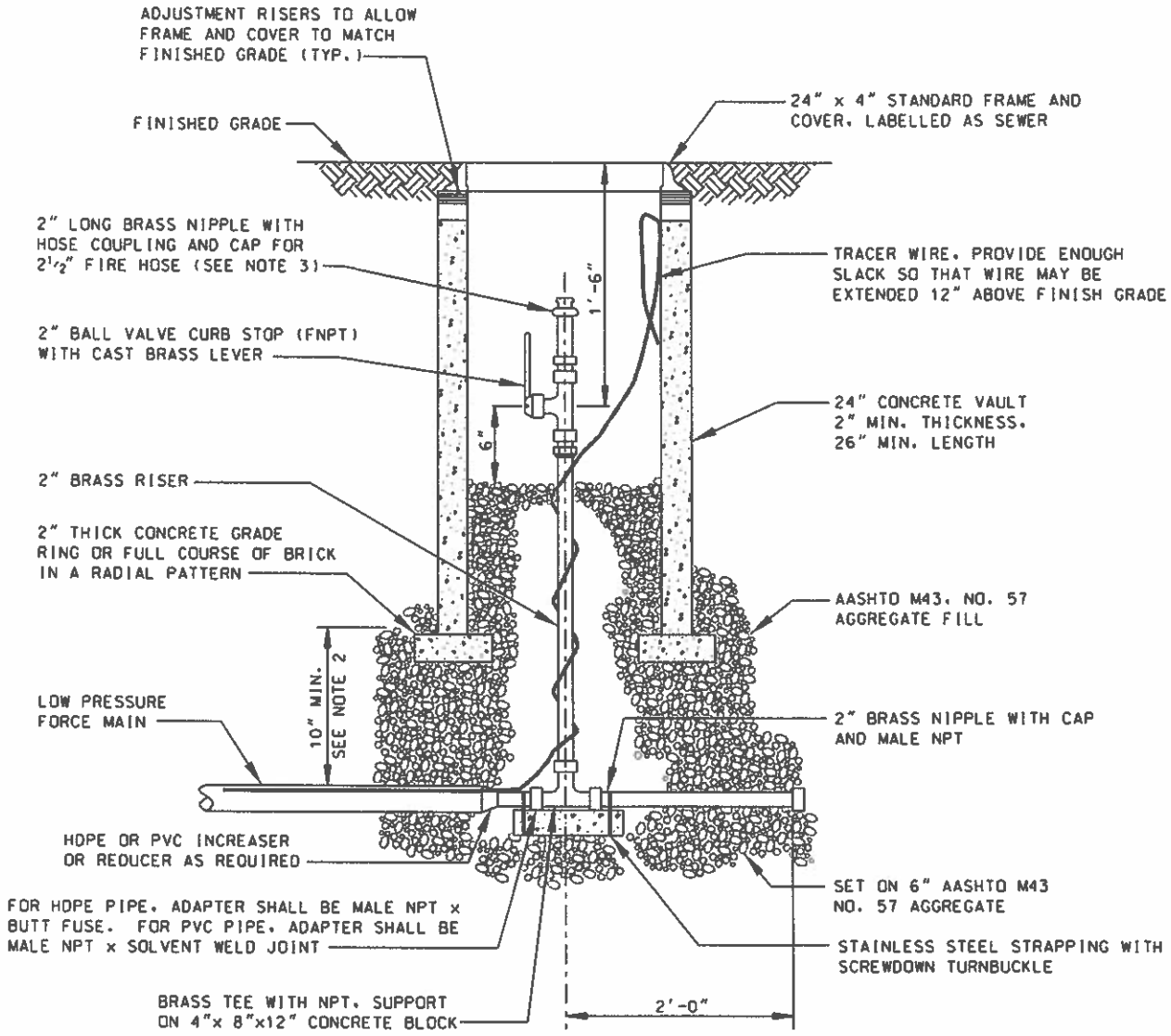

NOTES:

1. PROVIDE ADAPTERS FOR ALL CONNECTIONS BETWEEN PIPE FITTING.
2. BACKFILL WITH AASHTO M43 NO.57 AGGREGATE OR COMPACTED SAND THAT MEETS MARYLAND SHA REQUIREMENTS FOR FINE AGGREGATE.
3. HOSE CONNECTION AND CAP THREADS SHALL CONFORM TO ANSI SPECIFICATION B26 FOR "NATIONAL (AMERICAN) STANDARD FIRE-HOSE COUPLING SCREW THREAD.
4. DUCTILE IRON TEE SIZE SHALL BE SAME AS LINE SIZE.
5. ADJUSTMENT RISER TOTAL DEPTH SHALL BE 3" MIN. AND 6" MAX. WITH A MINIMUM OF TWO RISERS. MAXIMUM THICKNESS OF EACH RISER SHALL NOT EXCEED 1-1/2".

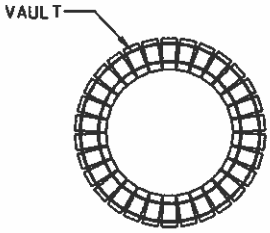

RADIAL BRICK PATTERN

HARFORD COUNTY, MD
DEPARTMENT OF PUBLIC WORKS

Robert B. Cowan

STANDARD SEWER DETAILS

TERMINAL FLUSHING CONNECTION

ISSUED 11/26/03
REVISED 3/15/09
REISSUED

PLATE LP-3

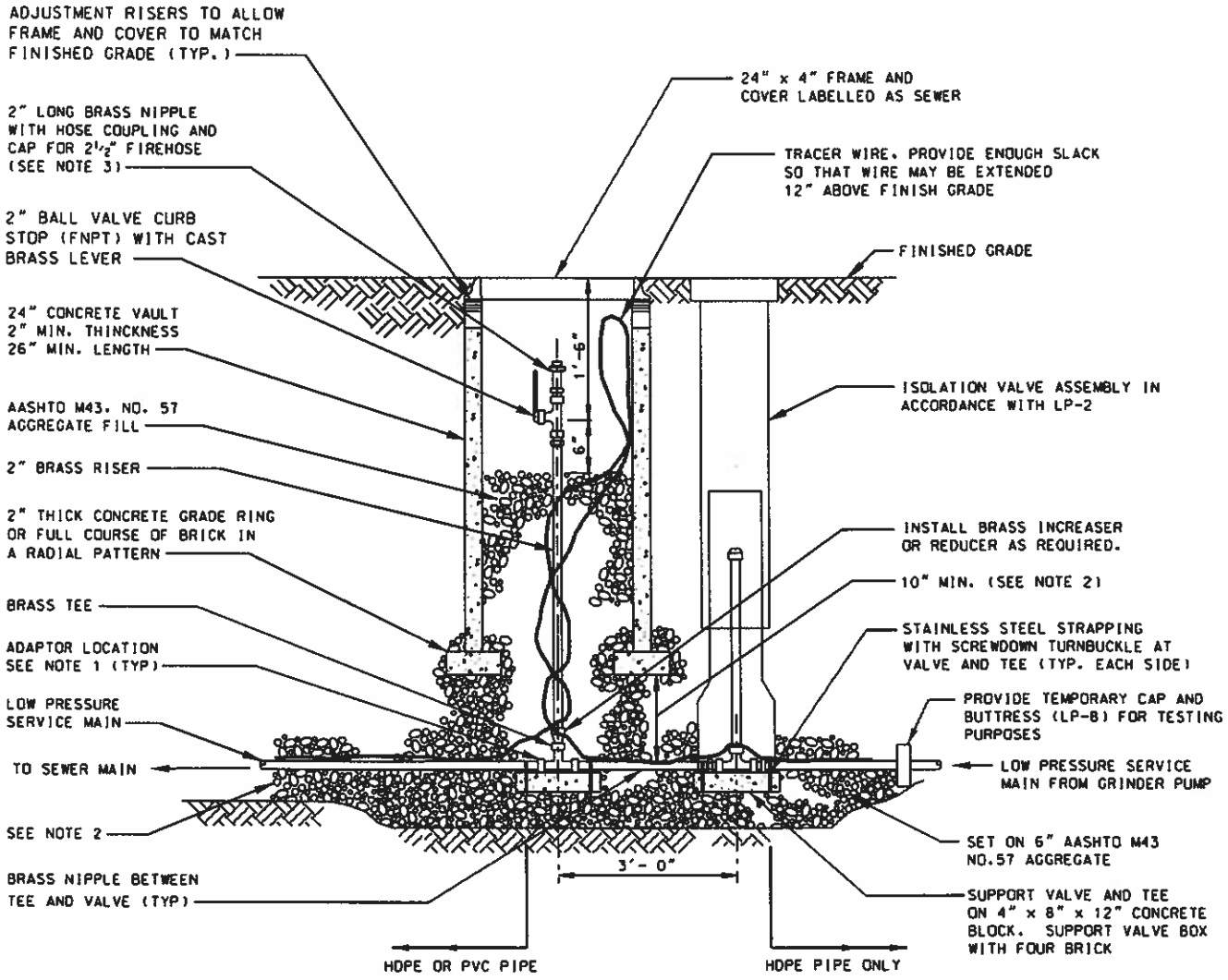

NOTES:

1. PROVIDE ADAPTERS IN ACCORDANCE WITH LP-2.
2. BACKFILL WITH AASHTO M43 NO.57 AGGREGATE OR COMPACTED SAND THAT MEETS MARYLAND SHA REQUIREMENTS FOR FINE AGGREGATE.
3. HOSE CONNECTION AND CAP THREADS SHALL CONFORM TO ANSI SPECIFICATION B26 FOR "NATIONAL (AMERICAN) STANDARD FIRE-HOSE COUPLING SCREW THREAD.
4. BRASS TEE SIZE SHALL BE SAME AS LINE SIZE.
5. ADJUSTMENT RISER TOTAL DEPTH SHALL BE 3" MIN. AND 6" MAX. WITH A MINIMUM OF TWO RISERS. MAXIMUM THICKNESS OF EACH RISER SHALL NOT EXCEED 1-1/2".

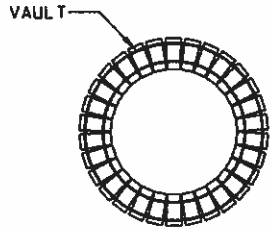

RADIAL BRICK PATTERN

HARFORD COUNTY, MD
DEPARTMENT OF PUBLIC WORKS
Robert B. Cooper

STANDARD SEWER DETAILS

SERVICE VALVE ASSEMBLY

ISSUED 11/26/03
REVISED 3/15/09
REISSUED

PLATE LP-4

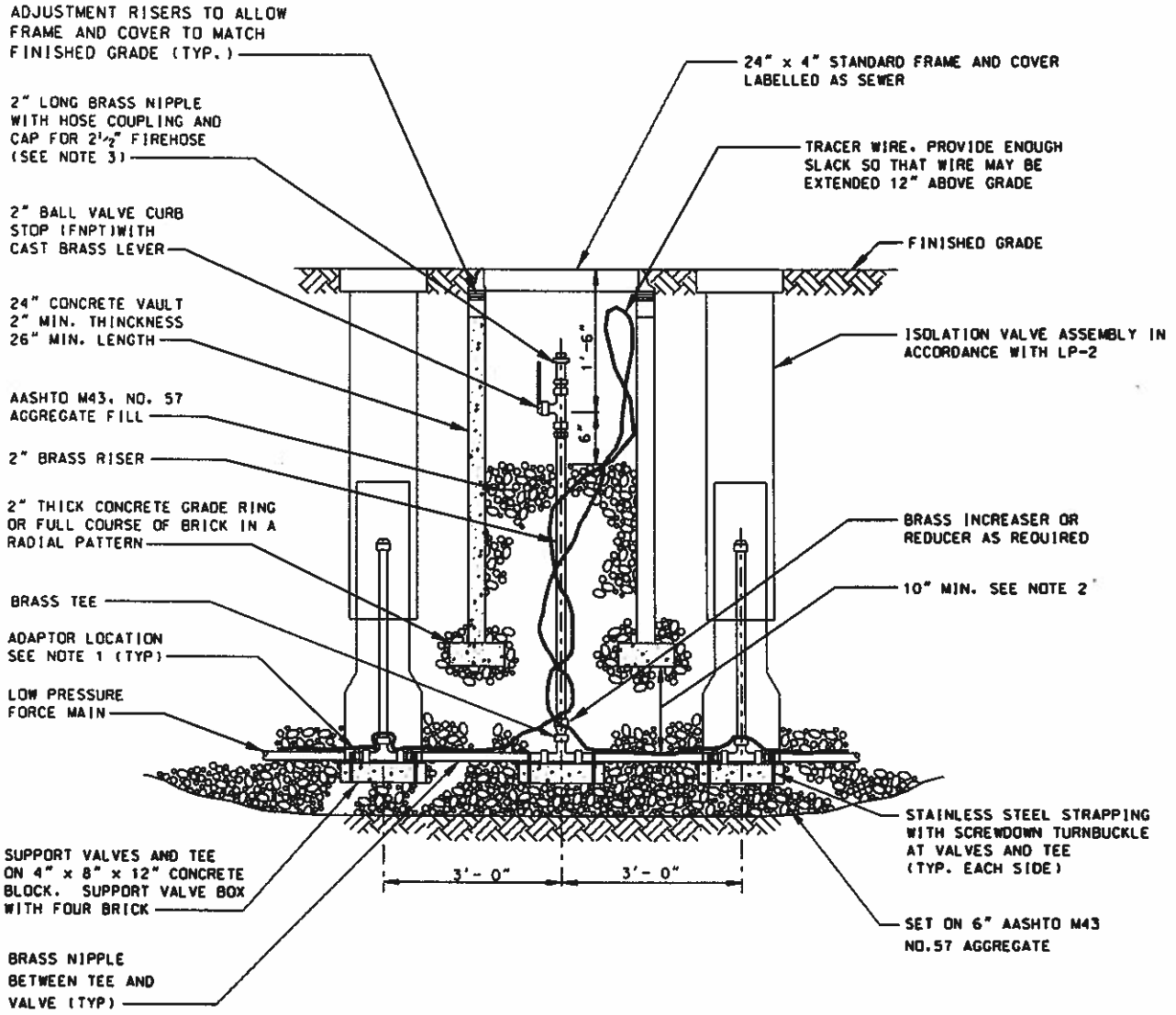

NOTES:

1. PROVIDE ADAPTERS IN ACCORDANCE WITH LP-2.
2. BACKFILL WITH AASHTO M43 NO.57 AGGREGATE OR COMPACTED SAND THAT MEETS MARYLAND SHA REQUIREMENTS FOR FINE AGGREGATE.
3. HOSE COUPLING AND CAP THREADS SHALL CONFORM TO ANSI SPECIFICATION B26 FOR "NATIONAL (AMERICAN) STANDARD FIRE HOSE COUPLING SCREW THREAD".
4. BRASS TEE SIZE SHALL BE SAME AS LINE SIZE.
5. ADJUSTMENT RISER TOTAL DEPTH SHALL BE MIN. 3" AND MAX. 6" WITH A MINIMUM OF TWO RISERS. MAXIMUM THICKNESS OF EACH RISER SHALL NOT EXCEED 1-1/2".

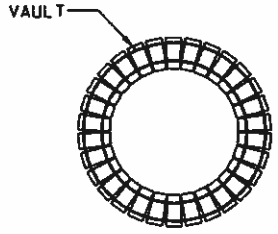

RADIAL BRICK PATTERN

HARFORD COUNTY, MD
DEPARTMENT OF PUBLIC WORKS
Robert B. Cooper

STANDARD SEWER DETAILS

INLINE FLUSHING CONNECTION

ISSUED 11/26/03
REVISED 3/15/09
REISSUED

PLATE LP-5

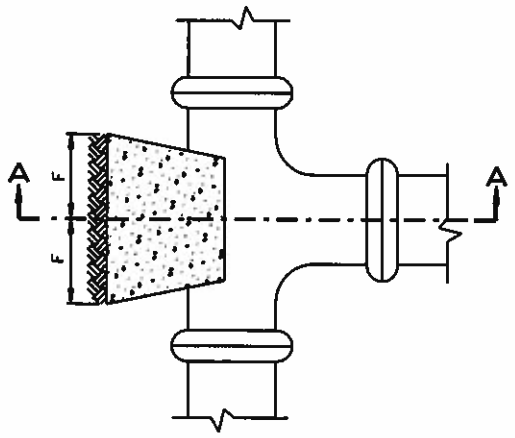

PLAN

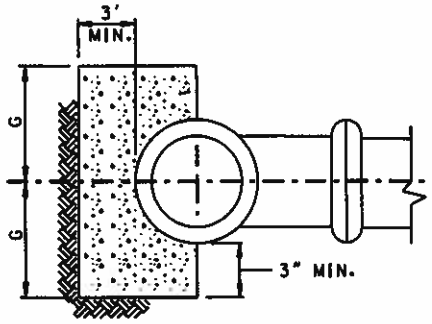

SECTION A-A

TEES / WYES

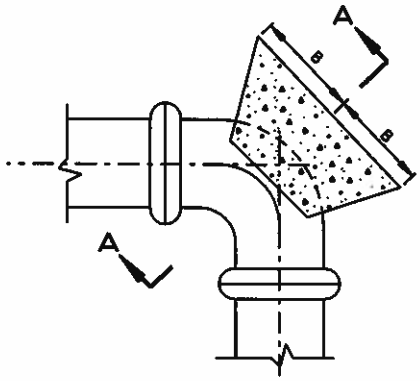

PLAN

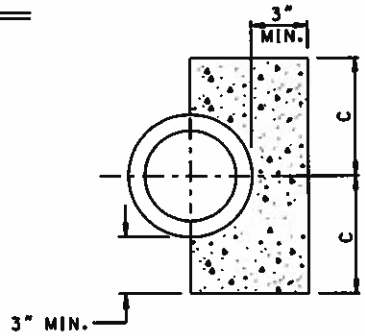

SECTION A-A

90° HORIZONTAL BENDS

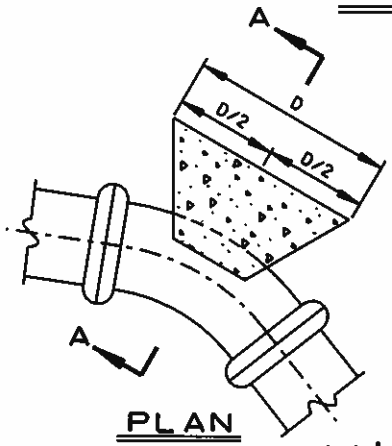

PLAN

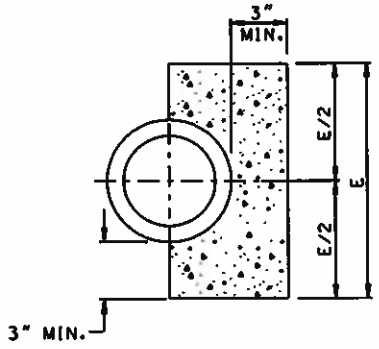

SECTION A-A

11¼° 22½° 45° HORIZONTAL BENDS

NOTES:

1. CARRY ALL BEARING SURFACES TO UNDISTURBED EARTH OR SOIL THAT MEETS ALL COMPACTION REQUIREMENTS.
2. ALL CONCRETE TO BE MIX NO.2, 3000 PSI.
3. BUTTRESS SIZED FOR 150 PSI.
4. DO NOT ENCASE JOINTS.

PIPE SIZE	B	C	D	E	F	G
1¼" & 1½"	5"	5"	5"	7"	3"	3"
2"	5"	5"	7"	9"	5"	5"
2½"	5"	5"	7"	9"	5"	5"
3"	6"	6"	9"	9"	6"	6"
4"	13"	6"	12"	12"	8"	6"

HARFORD COUNTY, MD
DEPARTMENT OF
PUBLIC WORKS

STANDARD SEWER DETAILS

BUTTRESSES

ISSUED 11/26/03
REVISED
REISSUED 3/15/09

PLATE LP-6

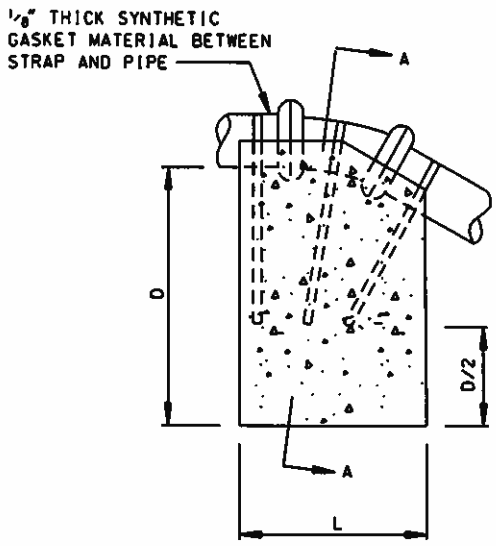

PROFILE

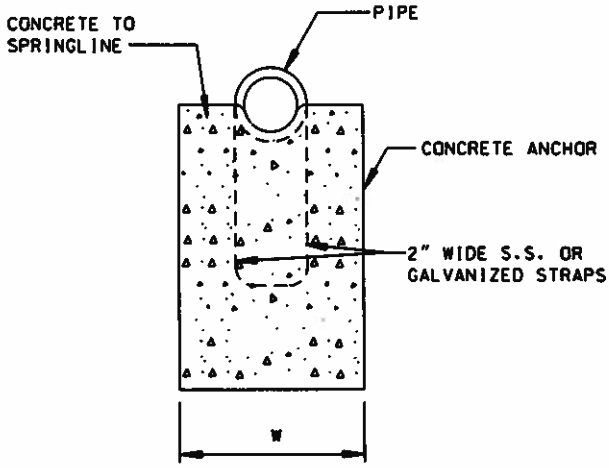

SECTION A-A

BEND \ SIZE		1 1/4", 1 1/2"	2", 2 1/2"	3"	4"
1/32 (11 1/4°)	L	12"	15"	18"	18"
	W	10"	12"	15"	18"
	D	10"	15"	15"	18"
1/16 (22 1/2°)	L	15"	20"	20"	24"
	W	15"	20"	20"	24"
	D	12"	12"	18"	20"
1/8 (45°)	L	20"	24"	24"	30"
	W	20"	20"	24"	30"
	D	12"	20"	24"	26"

NOTES:

1. GALVANIZED OR STAINLESS STEEL STRAPS SHALL BE 20 GAGE AND 2" WIDE.
2. STRAPS SHALL BE EMBEDDED IN CONCRETE A DISTANCE OF D/2.
3. 1/8" THICK SYNTHETIC GASKET MATERIAL SHALL BE PLACED BETWEEN STRAP AND PIPE.
4. PAINT EXPOSED GALVANIZED STRAPS W/2 COATS OF BITUMINOUS PAINT.
5. USE MIX NO.2 CONCRETE, 3000 PSI.
6. CARRY ALL BEARING SURFACES TO UNDISTURBED EARTH OR SOIL THAT MEETS COMPACTION REQUIREMENTS.
7. CONCRETE ANCHORAGE DIMENSIONS ARE BASED ON TOTAL PRESSURE OF 150 P.S.I.

HARFORD COUNTY, MD
DEPARTMENT OF PUBLIC WORKS
Robert B. Cooper

STANDARD SEWER DETAILS

PIPE ANCHORS

ISSUED 7/26/03
REVISED
REISSUED 3/15/09
PLATE LP-7

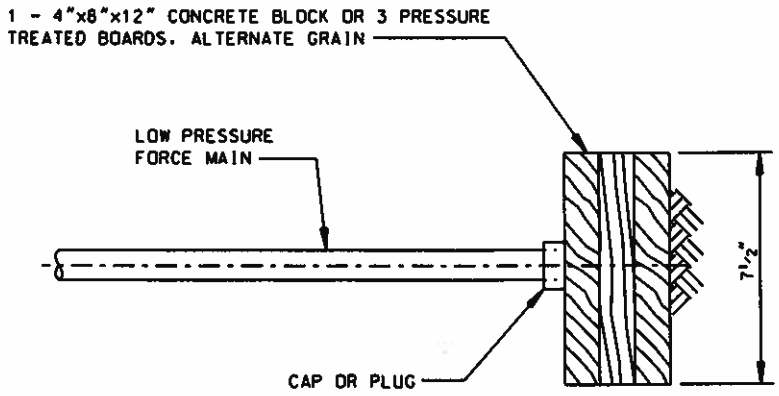

PLAN

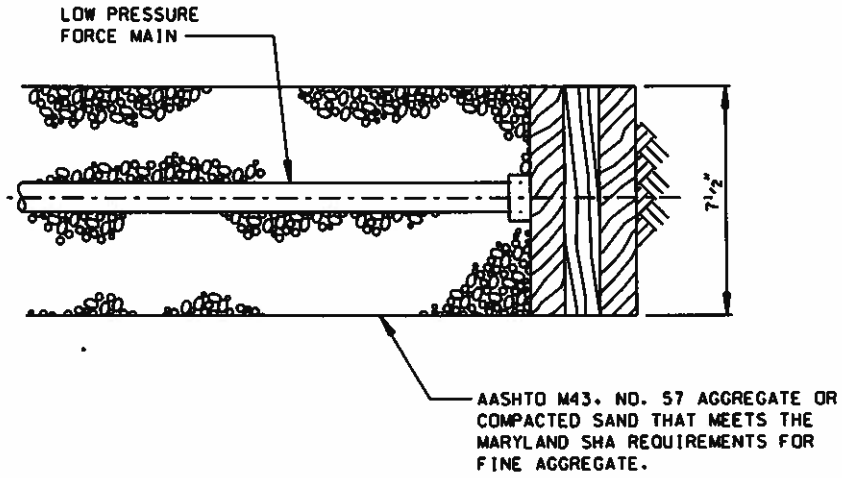

ELEVATION

NOTES:

1. CARRY ALL BEARING SURFACES TO UNDISTURBED EARTH OR SOIL THAT MEETS COMPACTION REQUIREMENTS.
2. BUTTRESS SIZED FOR 150 P.S.I.
3. NOMINAL THICKNESS OF ALL BOARDS IS 2".
4. MINIMUM OF 3 BOARDS TO BE PRESSURE TREATED YELLOW PINE.

HARFORD COUNTY, MD
DEPARTMENT OF
PUBLIC WORKS

STANDARD SEWER DETAILS

CAP AND PLUG
BLOCKING

ISSUED 11/26/03
REVISED
REISSUED 3/15/09

PLATE LP-8

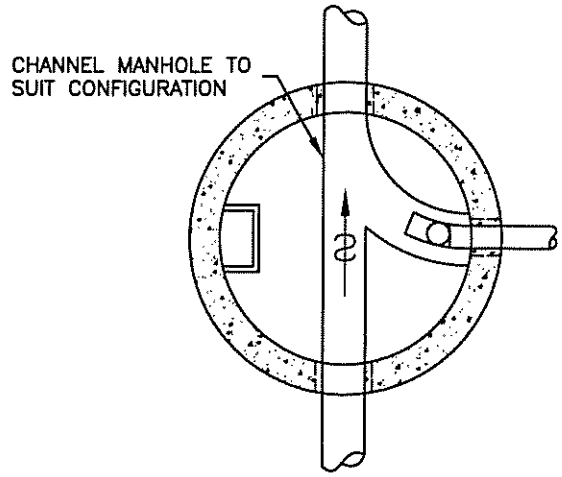

PLAN

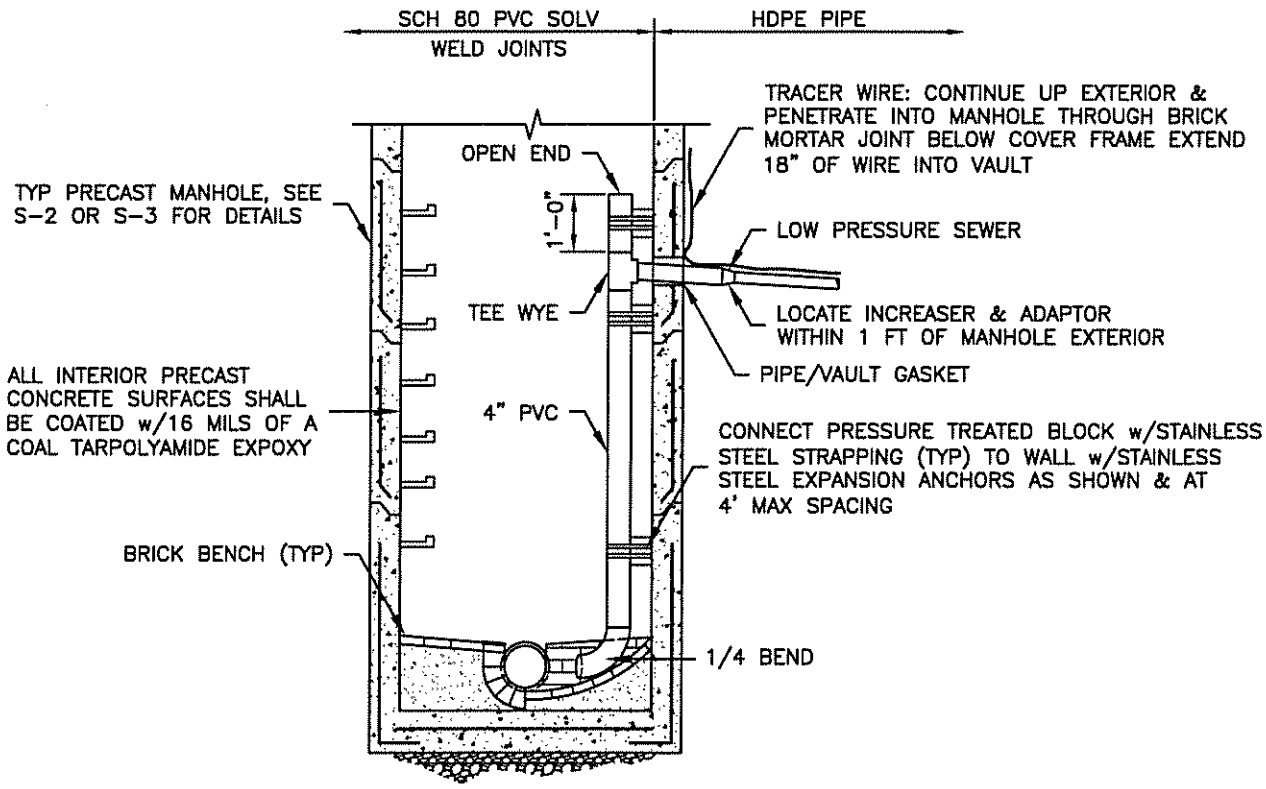

SECTION

NOTES:

1. DELETE 4" PVC PIPE AND INCREASER WHEN INVERT OF LOW PRESSURE SEWER IS LESS THAN 1'-0" FROM TOP OF BENCH.

2. THIS DETAIL DEPICTS CONNECTION TO A NEW MANHOLE. IF CONNECTION IS TO AN EXISTING MANHOLE, THE 4" PVC SHALL TERMINATE ON THE BENCH. THE BRICK SHALL BE BUILT UP ON THE BENCH TO CREATE A CHANNEL. THE BRICKWORK ON THE OPPOSITE BENCH SHALL BE RAISED AND TAPERED TOWARDS THE CHANNEL.

HARFORD COUNTY, MD DEPARTMENT OF PUBLIC WORKS	LOW PRESSURE SEWER	ISSUED 11/26/03 REVISED 11/10/14
	CONNECTION AT MANHOLE	PLATE LP-9

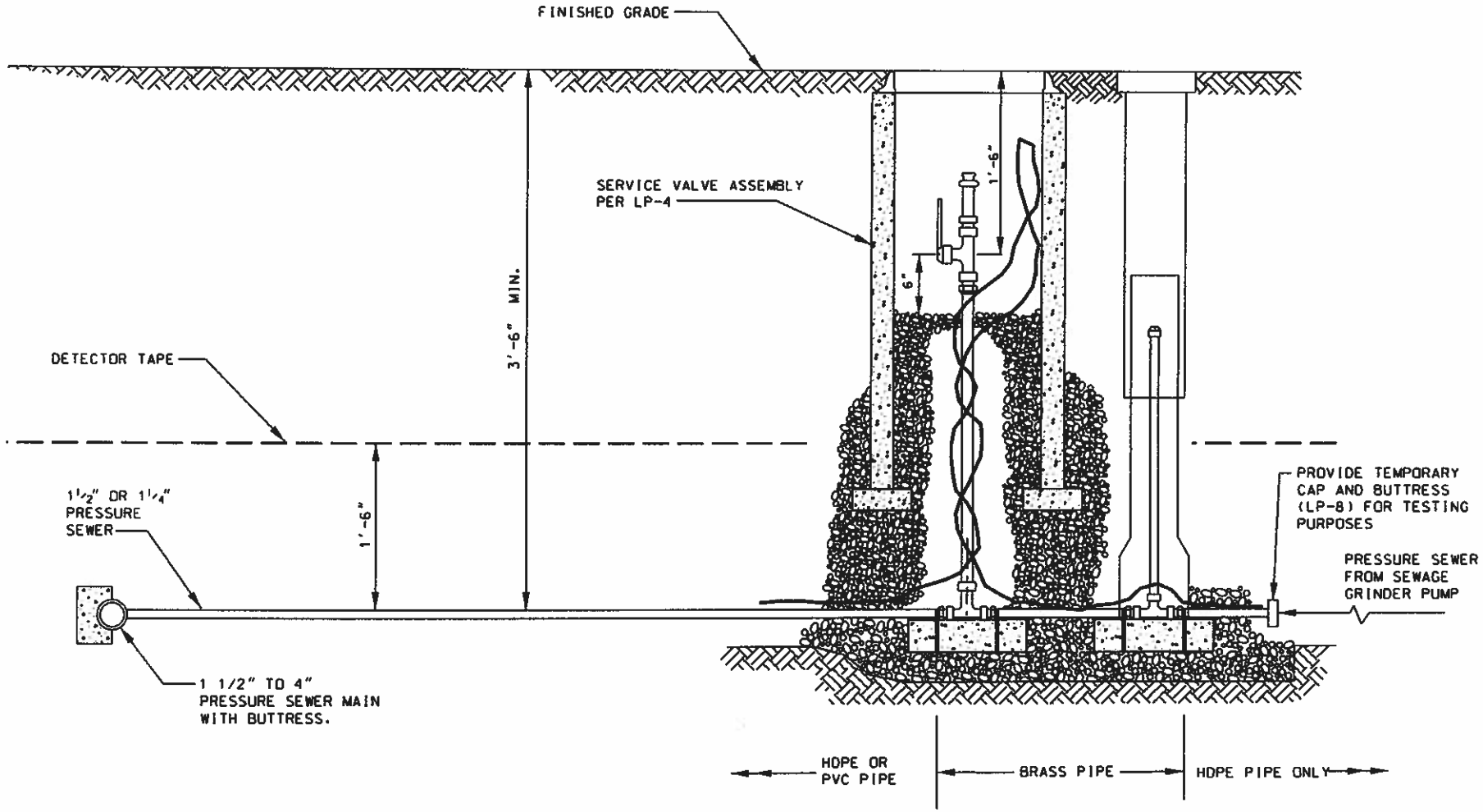

NOTE:

1. IF TAPPING EXISTING HDPE MAIN, USE HDPE MECHANICAL TAPPING TEE. SEE STANDARD SPECIFICATION SECTION 02731.

HARFORD COUNTY, MD
DEPARTMENT OF PUBLIC WORKS

Robert P. Cooper

STANDARD SEWER DETAILS

SERVICE VALVE ASSEMBLY
CONNECTION TO PRESSURE MAIN

ISSUED	11/26/03
REVISED	3/15/09
REISSUED	

PLATE LP-10

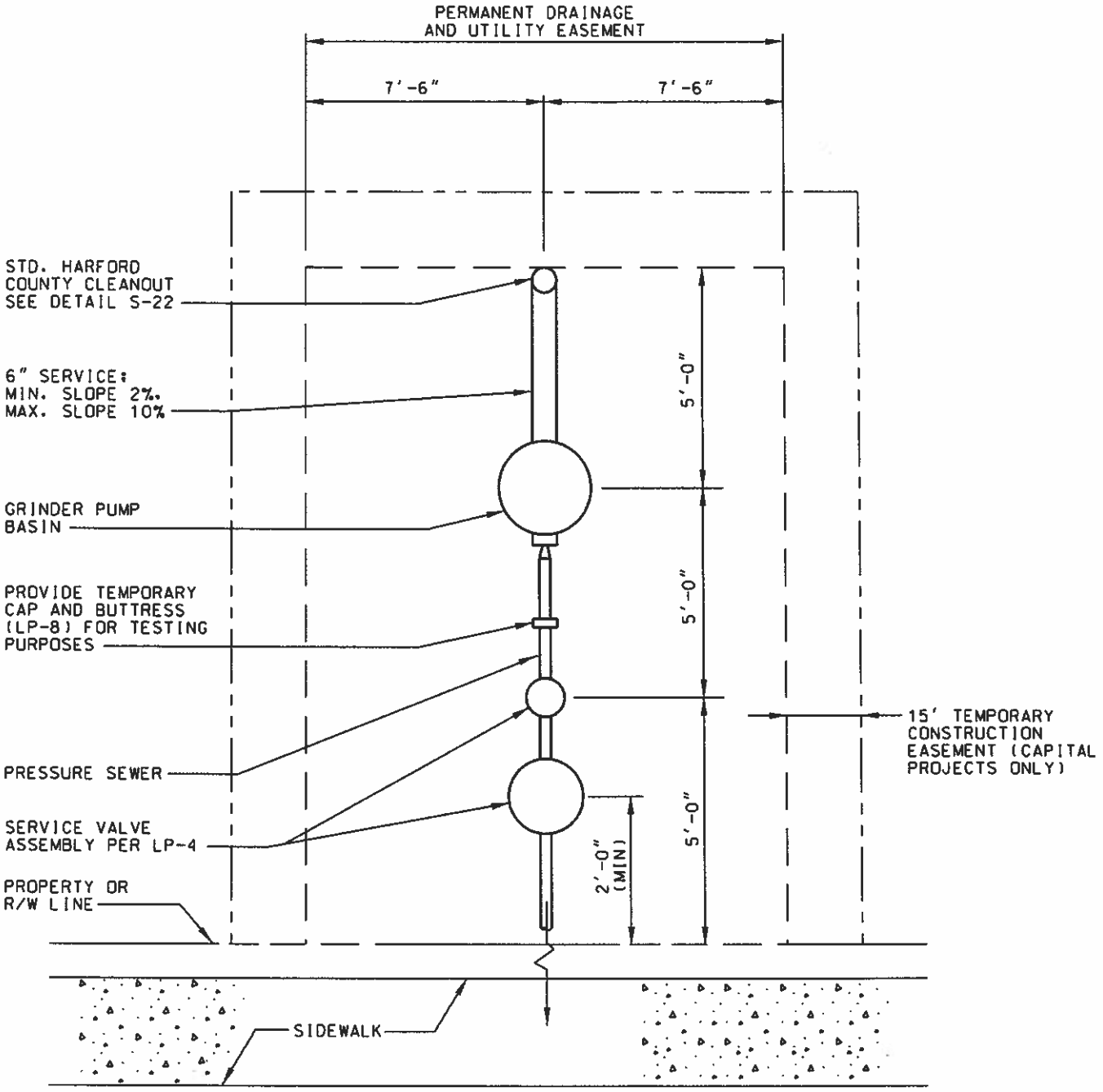

NOTES:

1. CENTER GRINDER PUMP AND APPURTENANCES IN EASEMENT UNLESS OTHERWISE DIMENSIONED.
2. THERE SHALL BE A PHYSICAL BREAK IN THE LOW PRESSURE SEWER BETWEEN THE SERVICE VALVE ASSEMBLY AND GRINDER PUMP BASIN FOR TESTING PURPOSES. THE PHYSICAL BREAK SHALL REMAIN UNTIL THE LOW PRESSURE SYSTEM HAS BEEN FULLY TESTED AND APPROVED.

HARFORD COUNTY, MD
DEPARTMENT OF
PUBLIC WORKS
Robert B Cooper

STANDARD SEWER DETAILS

GRINDER PUMP LOCATION
FOR SIMPLEX PUMPS

ISSUED 11/26/03
REVISED 3/15/09
REISSUED

PLATE LP-11

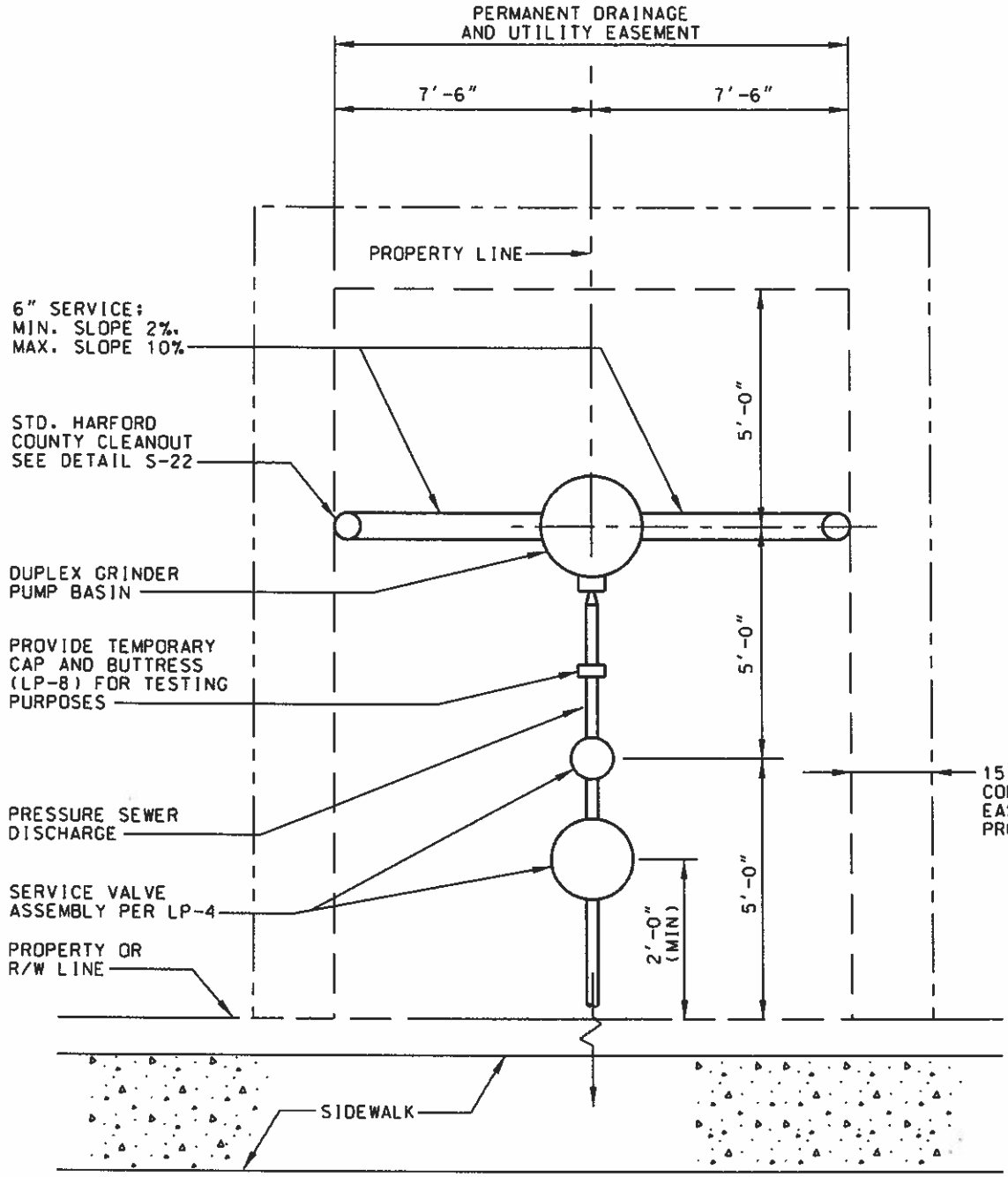

NOTES:

1. CENTER GRINDER PUMP AND APPURTENANCES IN EASEMENT UNLESS OTHERWISE DIMENSIONED.
2. THERE SHALL BE A PHYSICAL BREAK IN THE LOW PRESSURE SEWER BETWEEN THE SERVICE VALVE ASSEMBLY AND GRINDER PUMP BASIN FOR TESTING PURPOSES. THE PHYSICAL BREAK SHALL REMAIN UNTIL THE LOW PRESSURE SYSTEM HAS BEEN FULLY TESTED AND APPROVED.

HARFORD COUNTY, MD
DEPARTMENT OF
PUBLIC WORKS

Robert B. Cooper

STANDARD SEWER DETAILS

GRINDER PUMP LOCATION
FOR DUPLEX PUMPS

ISSUED 11/26/03
REVISED 3/15/09
REISSUED

PLATE LP-12

	ENVIRONMENT ONE MODEL	CONCRETE VOLUME	PRE-CAST DIA. AT 33-1/2 in H.
SIMPLEX	DH71-61	.36 YD^3	ø 36 in
	DH71-74	.48 YD^3	ø 39-1/8 in
	DH71-93	.63 YD^3	ø 42-1/2 in
	DH71-124	.90 YD^3	ø 47-1/2 in
	DH71-129	.93 YD^3	ø 48 in
	DH71-158	1.17 YD^3	ø 52-1/4 in
	DH71-160	1.18 YD^3	ø 52-1/2 in
	ENVIRONMENT ONE MODEL	CONCRETE VOLUME	PRE-CAST DIA. AT 28 in H.
DUPLEX	DH152-93	1.1 YD^3	ø 58-3/8 in
	DH152-129	1.4 YD^3	ø 63-3/8 in
	DH152-160	1.6 YD^3	ø 67-1/2 in

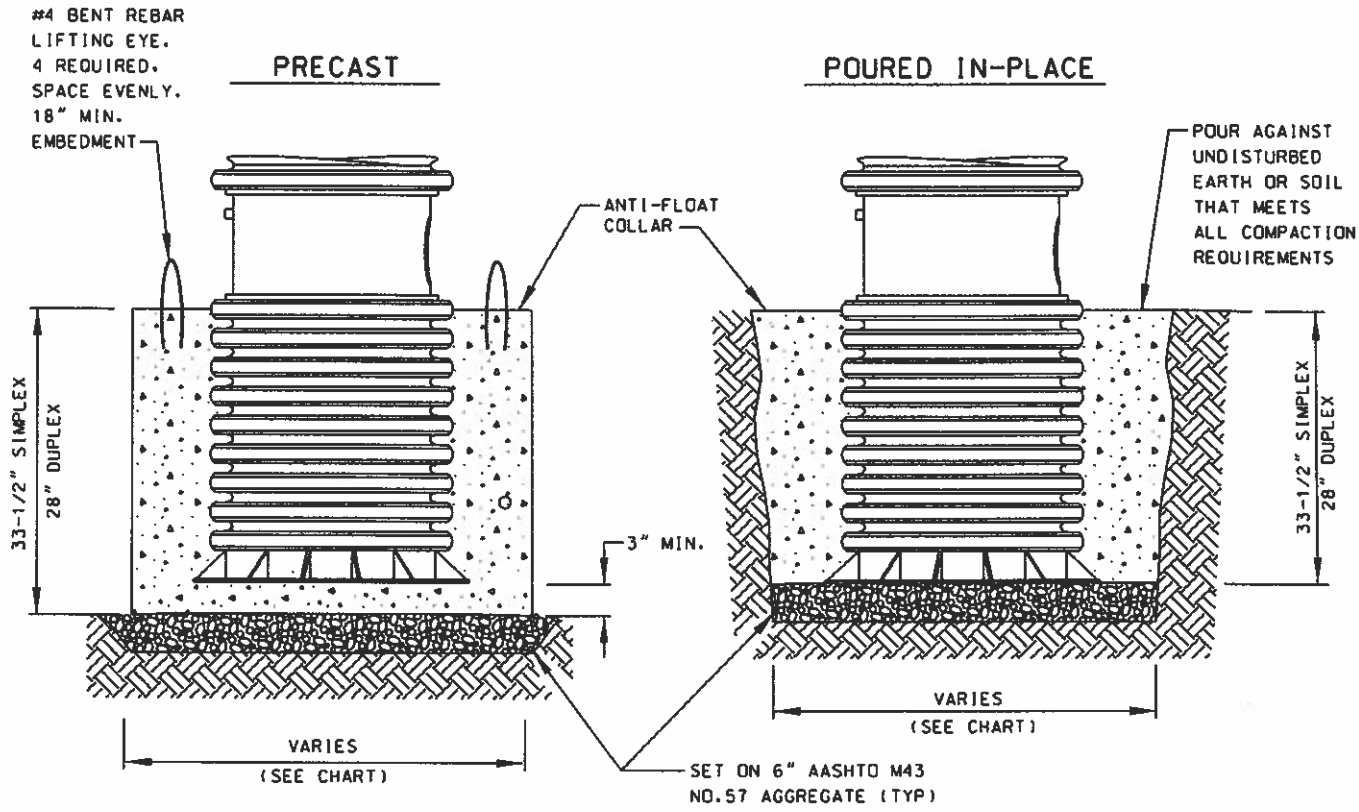

NOTES:

1. INSTALL PLUMB - PROVIDE TEMPORARY BRACING TO MAINTAIN POSITIONING DURING CONCRETE PLACEMENT.
2. ALL CONCRETE TO BE MIX NO. 1 AND SHALL CURE 24 HOURS PRIOR TO BACKFILL.
3. SEE LP-14 FOR COMPACTION.

HARFORD COUNTY, MD
DEPARTMENT OF PUBLIC WORKS

STANDARD SEWER DETAILS

ANTI-FLOATATION COLLAR

ISSUED 11/26/03
REVISED 5/11/06
REVISED 3/15/09

PLATE LP-13

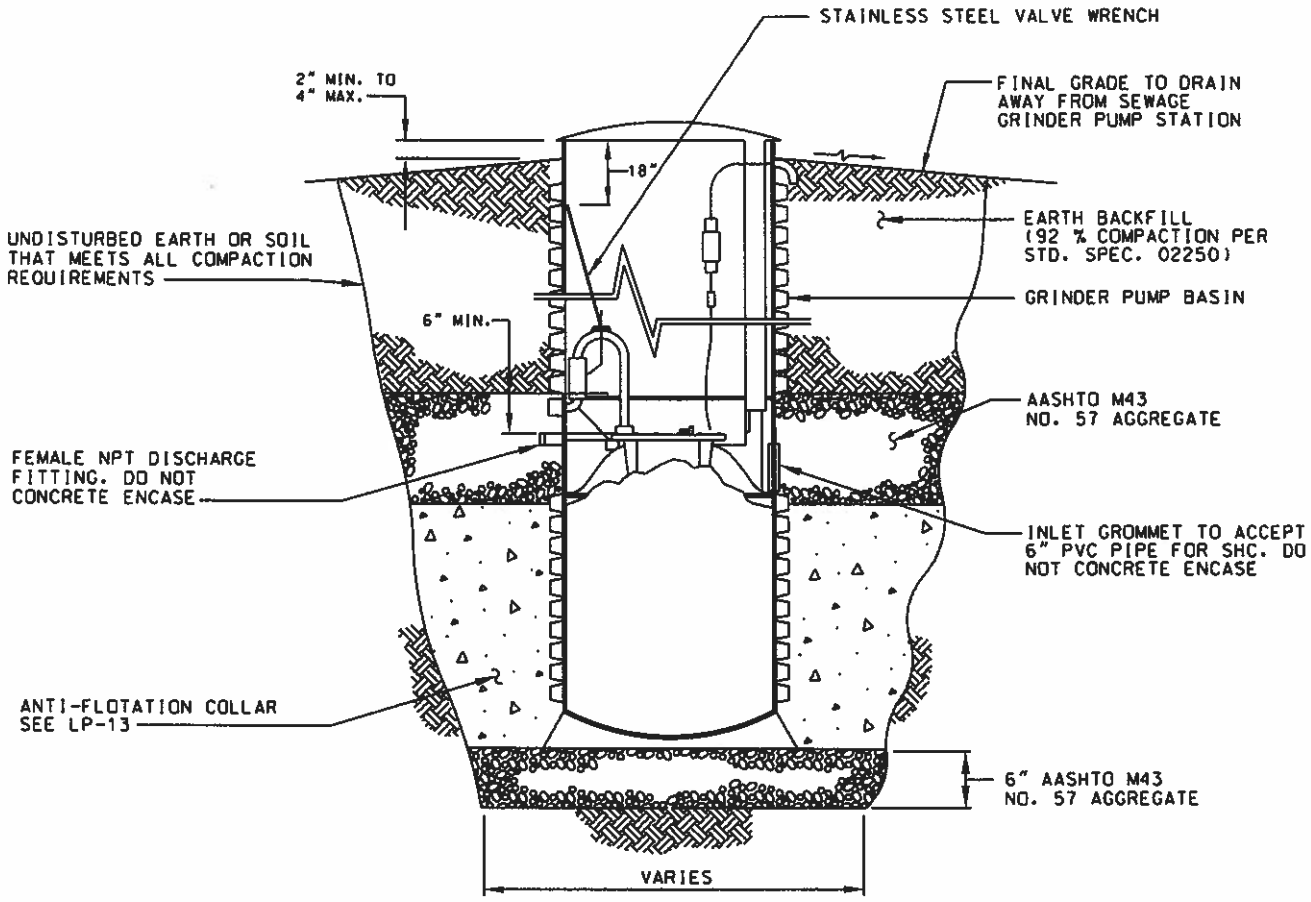

NOTES:

1. SIMPLEX PUMP SHOWN. DUPLEX PUMP BACKFILL IS THE SAME.
2. INSTALL PLUMB. PROVIDE TEMPORARY BRACING TO MAINTAIN POSITIONING DURING BACKFILL.
3. SEE LP-13 FOR ANTI-FLOATATION COLLAR DETAILS.
4. CONCRETE SHALL CURE A MINIMUM OF 24 HOURS PRIOR TO BACKFILL.

HARFORD COUNTY, MD
DEPARTMENT OF
PUBLIC WORKS
Robert B. Cooper

STANDARD SEWER DETAILS

GRINDER PUMP BACKFILL

ISSUED 11/26/03
REVISED
REISSUED 3/15/09

PLATE LP-14

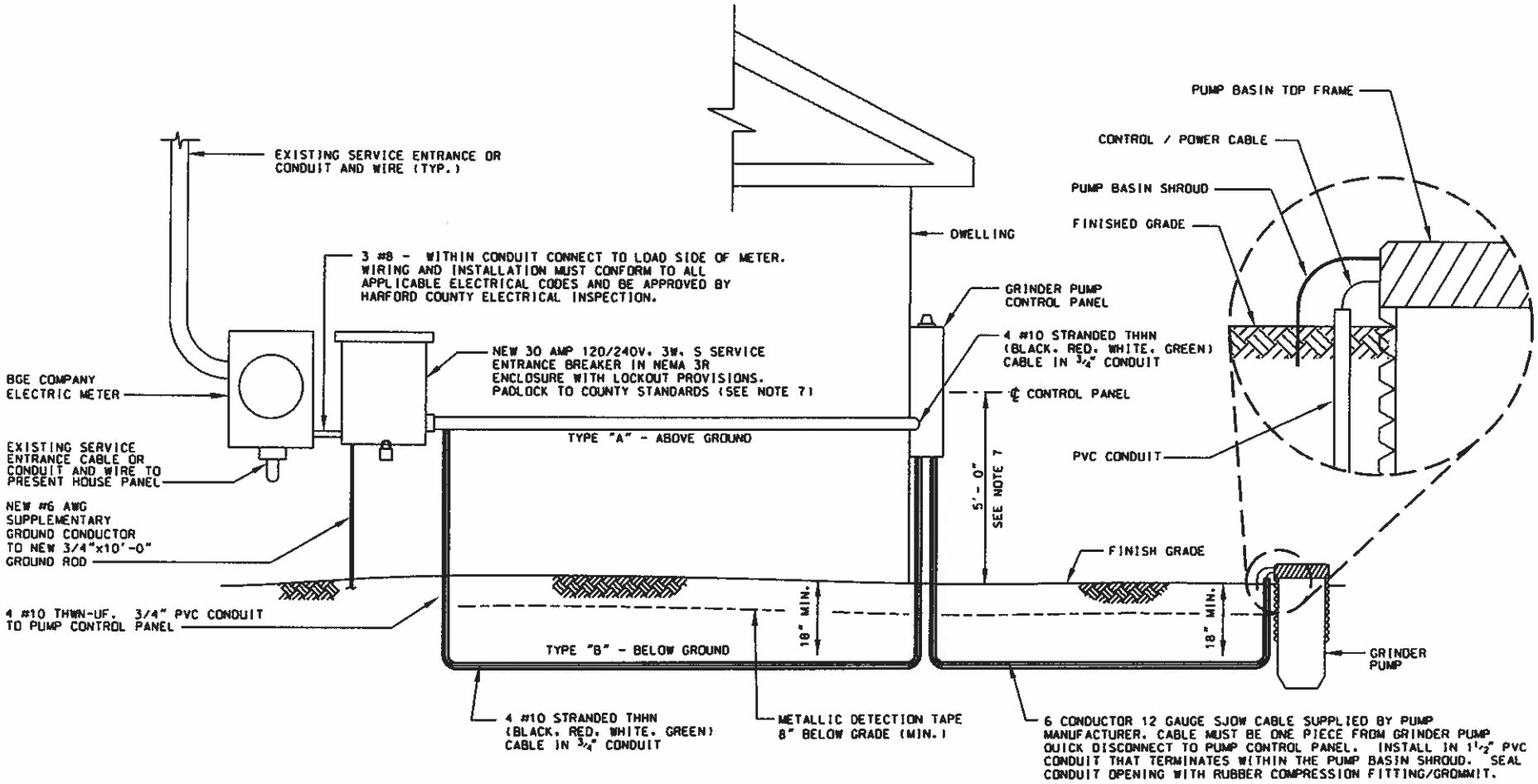

NOTES:

1. USE TYPE "A" CONFIGURATION WHERE PUMP PANEL IS WITHIN 10 FT. OF NEW SERVICE ENTRANCE.
2. USE TYPE "B" CONFIGURATION WHERE PUMP SUB PANEL IS MORE THAN 10 FT. AWAY FROM NEW SERVICE ENTRANCE.
3. CONNECTIONS TO ELECTRIC METER SHALL BE COORDINATED WITH POWER COMPANY.
4. SIDEWALKS, DRIVEWAY, AND FENCES THAT ARE DISTURBED SHALL BE REPLACED IN KIND. LANDSCAPING SHALL BE REMOVED, RELOCATED OR REPLACED AS APPROVED BY THE ENGINEER.
5. PUMP CONTROL PANEL MUST BE INSTALLED ON SIDE OF HOUSE AT THE FRONT CORNER WITHIN SIGHT DISTANCE OF THE GRINDER PUMP.
6. NO WIRING WILL BE PERMITTED WITHIN THE DWELLING.
7. IF THE HOME IS WITHIN THE 100-YEAR FLOODPLAIN, THE SERVICE ENTRANCE BREAKER AND CONTROL PANEL SHALL BE MOUNTED A MINIMUM ONE FOOT ABOVE THE 100-YEAR FLOOD PLAIN ELEVATION AND SHALL BE FULLY ACCESSIBLE BY HARFORD COUNTY MAINTENANCE PERSONNEL. THE DISTANCE OF 5'-0" SHALL BE MAINTAINED AND MAY REQUIRE THE CONSTRUCTION OF A PLATFORM AND STAIRS. THE PLATFORM AND STAIRS SHALL HAVE RAILINGS.
8. CONTRACTOR TO PROVIDE MASTER LOCK PADLOCK TO COUNTY STANDARDS FOR ENTRANCE BREAKER, CONTROL PANEL, AND GRINDER PUMP BASIN.

HARFORD COUNTY, MD
DEPARTMENT OF PUBLIC WORKS
Robert B. Cooper

STANDARD SEWER DETAILS

TYPICAL GRINDER PUMP ELECTRIC SERVICE

ISSUED 11/26/03
REVISED 5/11/06
REVISED 3/15/09

PLATE LP-15

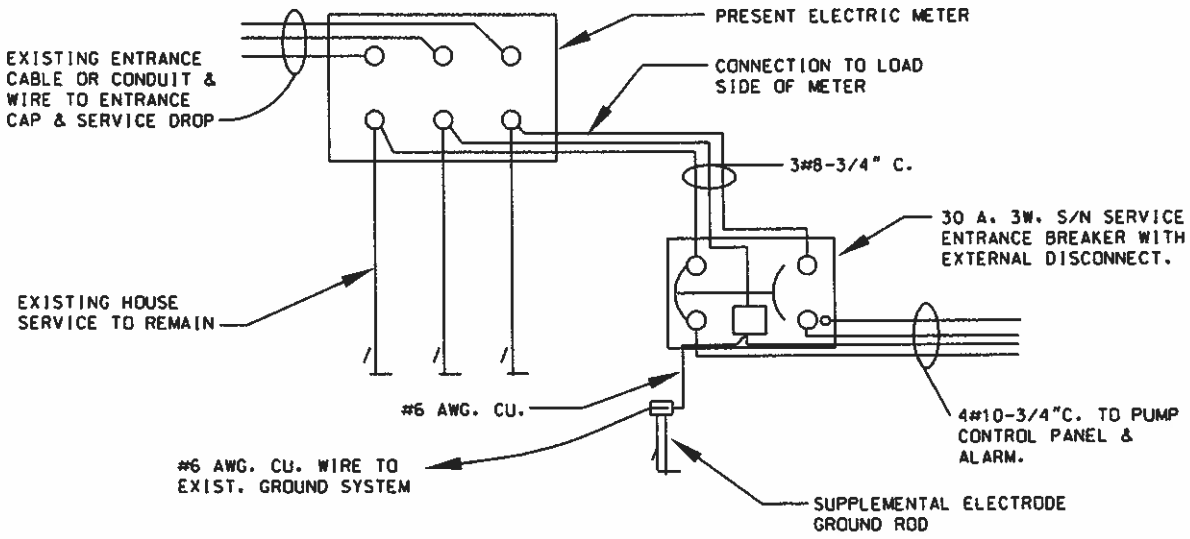

HARFORD COUNTY, MD
DEPARTMENT OF
PUBLIC WORKS

Robert B. Cooper

STANDARD SEWER DETAILS

NEW SERVICE ENTRANCE
WIRING DIAGRAM

ISSUED 11/26/03
REVISED
REISSUED 3/15/09

PLATE LP-16

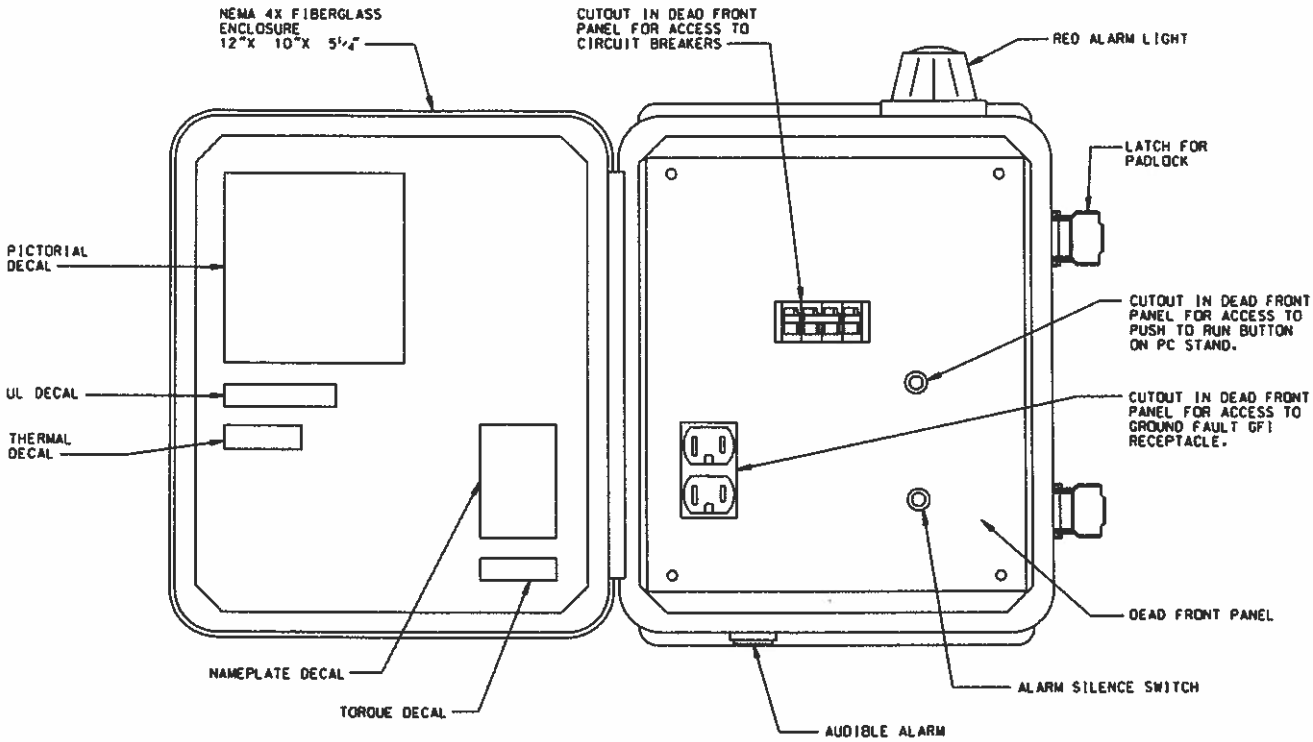

CONTROL CABLE:
TYPE TC: DIRECT BURIAL, 12AWG
SIX CONDUCTOR, ONE PEICE.

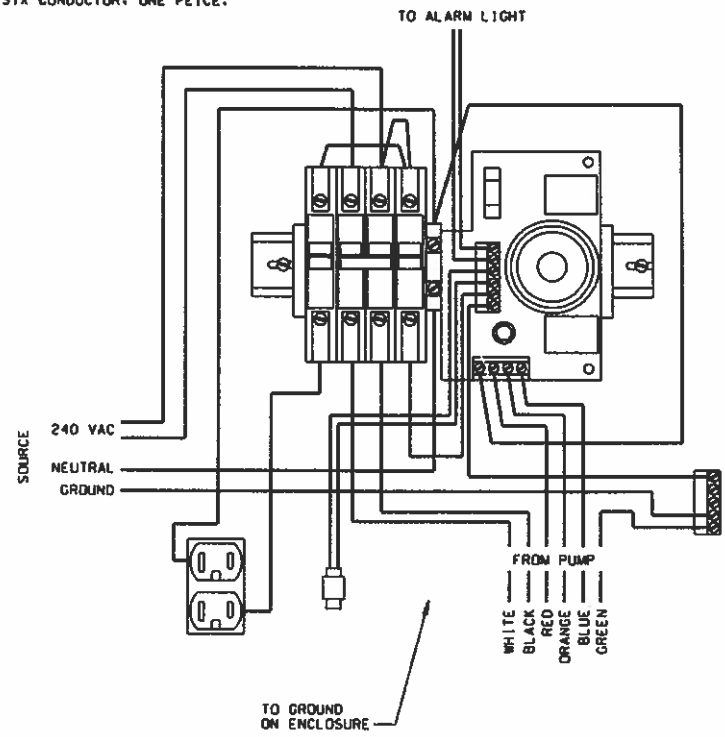

NOTES:

CONTROL PANEL SHALL INCLUDE:

1. REDUNDANT RUN (HIGH LEVEL)
2. VISUAL & AUDIBLE ALARM
3. MANUAL SILENCE
4. MANUAL RUN
5. 240VAC
6. NEMA 4X FIBERGLASS ENCLOSURE
7. MOUNT SECURITY TO HOUSE IN ACCORDANCE WITH ALL ELECTRICAL CODES.

HARFORD COUNTY, MD
DEPARTMENT OF PUBLIC WORKS

STANDARD SEWER DETAILS

CONTROL PANEL

ISSUED 11/26/03
REVISED
REISSUED 3/15/09

PLATE LP-17

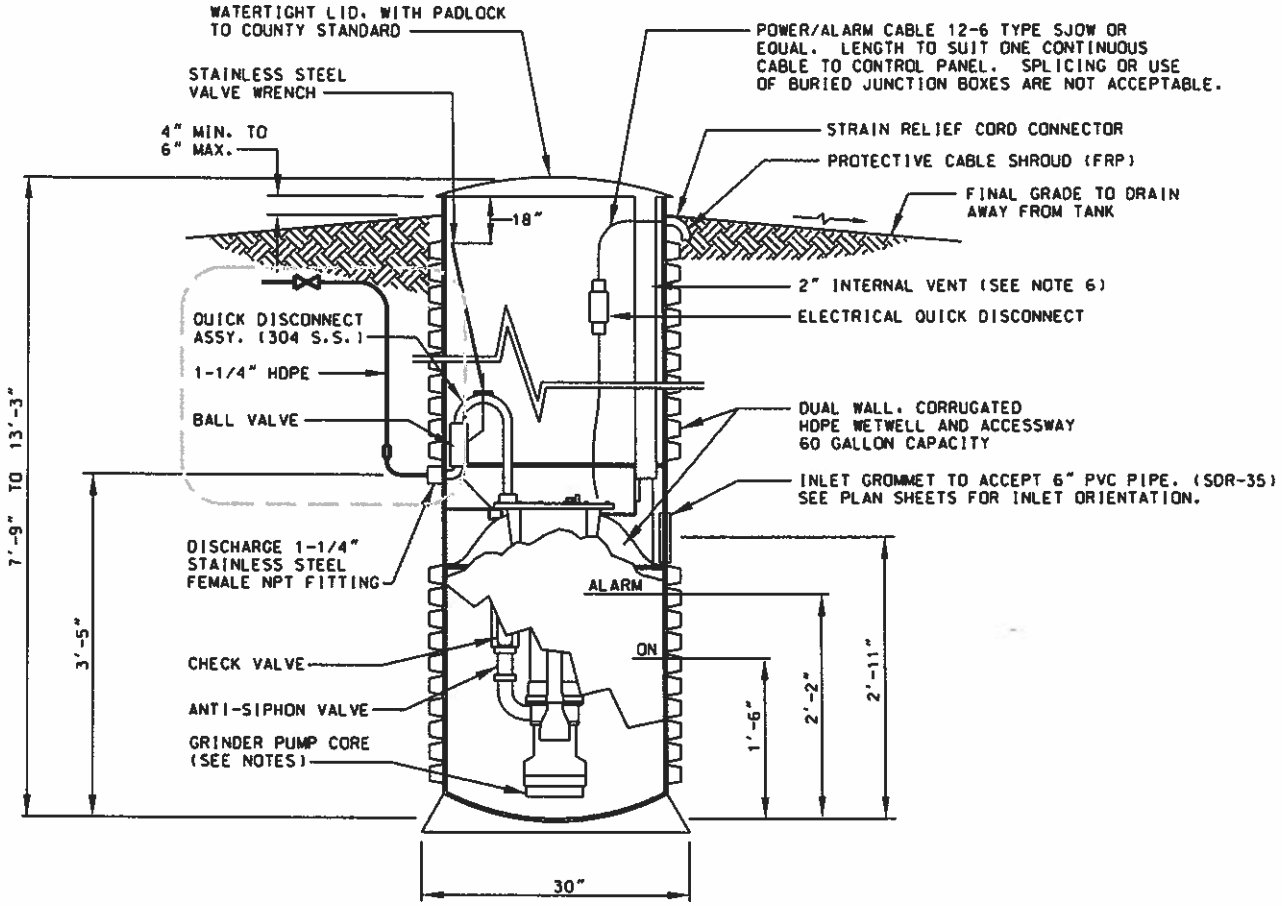

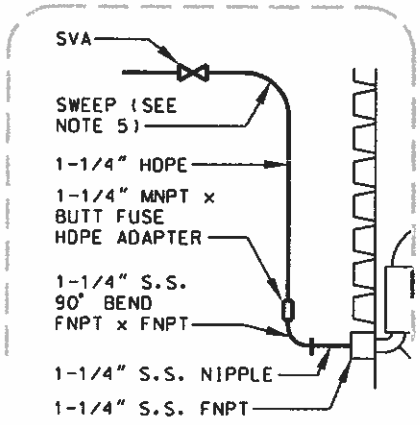

NOTES:

1. NO FIELD JOINTS ARE ALLOWED.
2. SEE DETAIL LP-13 FOR ANTI-FLOATATION COLLAR.
3. SEE DETAIL LP-14 FOR BACKFILL AND BEDDING REQUIREMENTS.
4. FOR DEVELOPER PROJECTS, PUMP AND CABLE TO BE STORED AT PUMP SUPPLIERS WAREHOUSE.
5. DELETE SWEEP IF DISCHARGE PORT HAS LESS THAN 5' OF COVER.
6. A MANUFACTURER INSTALLED FLOOD VENT UTILIZING GORE-TEX MEMBRANE, SHALL BE INSTALLED ON ALL GRINDER PUMPS WITHIN THE 100-YEAR FLOOD PLAIN.

HARFORD COUNTY, MD
DEPARTMENT OF PUBLIC WORKS

Robert B. Cooper

STANDARD SEWER DETAILS

SIMPLEX GRINDER PUMP SECTION

ISSUED 11/26/03
REVISED 3/15/09
REISSUED

PLATE LP-18

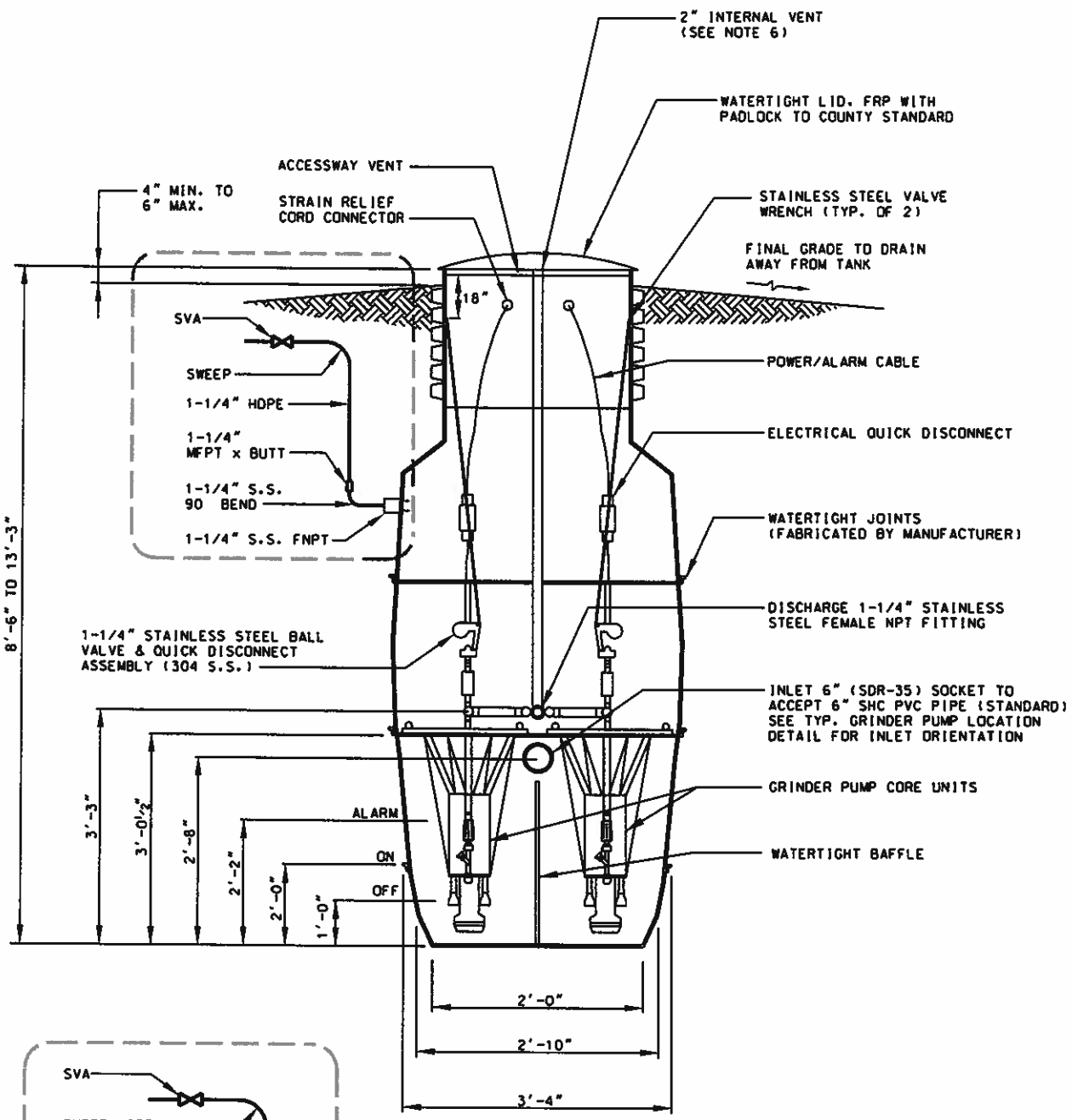

NOTES:

1. NO FIELD JOINTS ARE ALLOWED.
2. SEE DETAIL LP-13 FOR ANTI-FLOATATION COLLAR.
3. SEE DETAIL LP-14 FOR BACKFILL AND BEDDING REQUIREMENTS.
4. DELETE SWEEP IF DISCHARGE PORT HAS LESS THAN 5 FEET OF COVER.
5. A MANUFACTURER INSTALLED FLOOD VENT UTILIZING GORE-TEX MEMBRANE, SHALL BE INSTALLED ON ALL GRINDER PUMPS WITHIN THE 100-YEAR FLOOD PLAIN.

HARFORD COUNTY, MD
DEPARTMENT OF
PUBLIC WORKS

Robert B. Cooper

STANDARD SEWER DETAILS

DUPLEX GRINDER PUMP SECTION

ISSUED 11/26/03
REVISED 3/15/09
REISSUED

PLATE LP-19

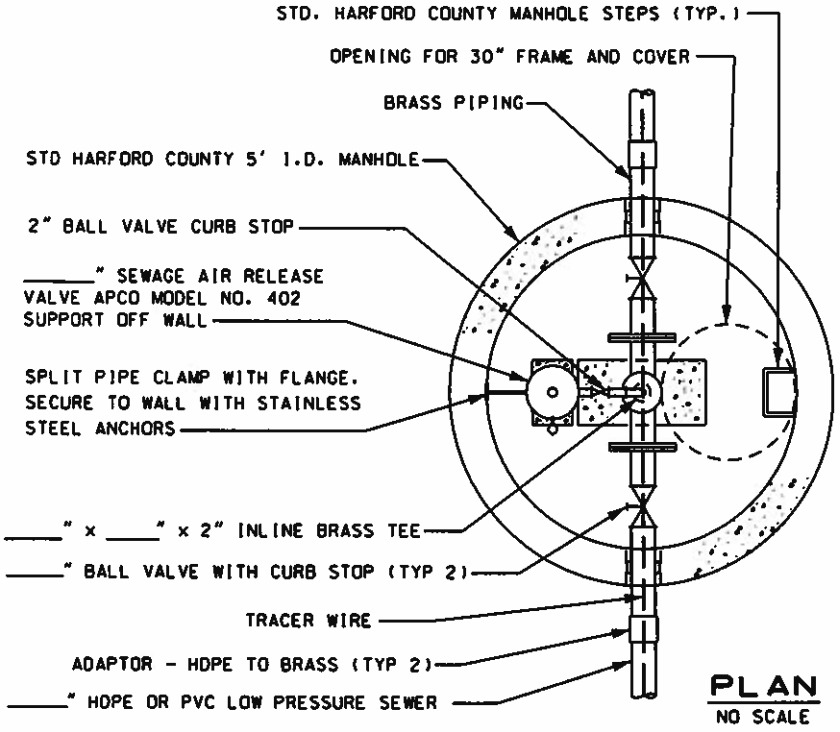

PLAN
NO SCALE

NOTES:

1. ALL FITTINGS BELOW AIR VALVE TO BE HEAVY DUTY THREADED. UNPOLISHED BRASS UNLESS NOTED OTHERWISE.
2. ALL PIPE SUPPORTS AND BRACING TO BE SIZED BY ENGINEER.
3. SET MANHOLE ON 6" LEVELING COURSE OF AASHTO M43, NO. 57 AGGREGATE.
4. VAULTS IN HIGH WATER TABLE AREAS SHALL BE MODIFIED AS REQUIRED BY THE COUNTY.
5. MIN. VAULT HEIGHT SHALL BE 6'- 6" MEASURED FROM FLOOR TO CEILING.
6. AN ACCEPTABLE ALTERNATIVE TO THE 90 BEND AND BALL VALVE CURBSTOP IS AN ANGLE BALL SERVICE VALVE.
7. DESIGN ENGINEER SHALL COMPLETE SIZING OF APPURTENANCES AS PART OF THE DESIGN.
8. REFER TO STANDARD DETAIL S-25 FOR MAINLINES GREATER THAN 3"

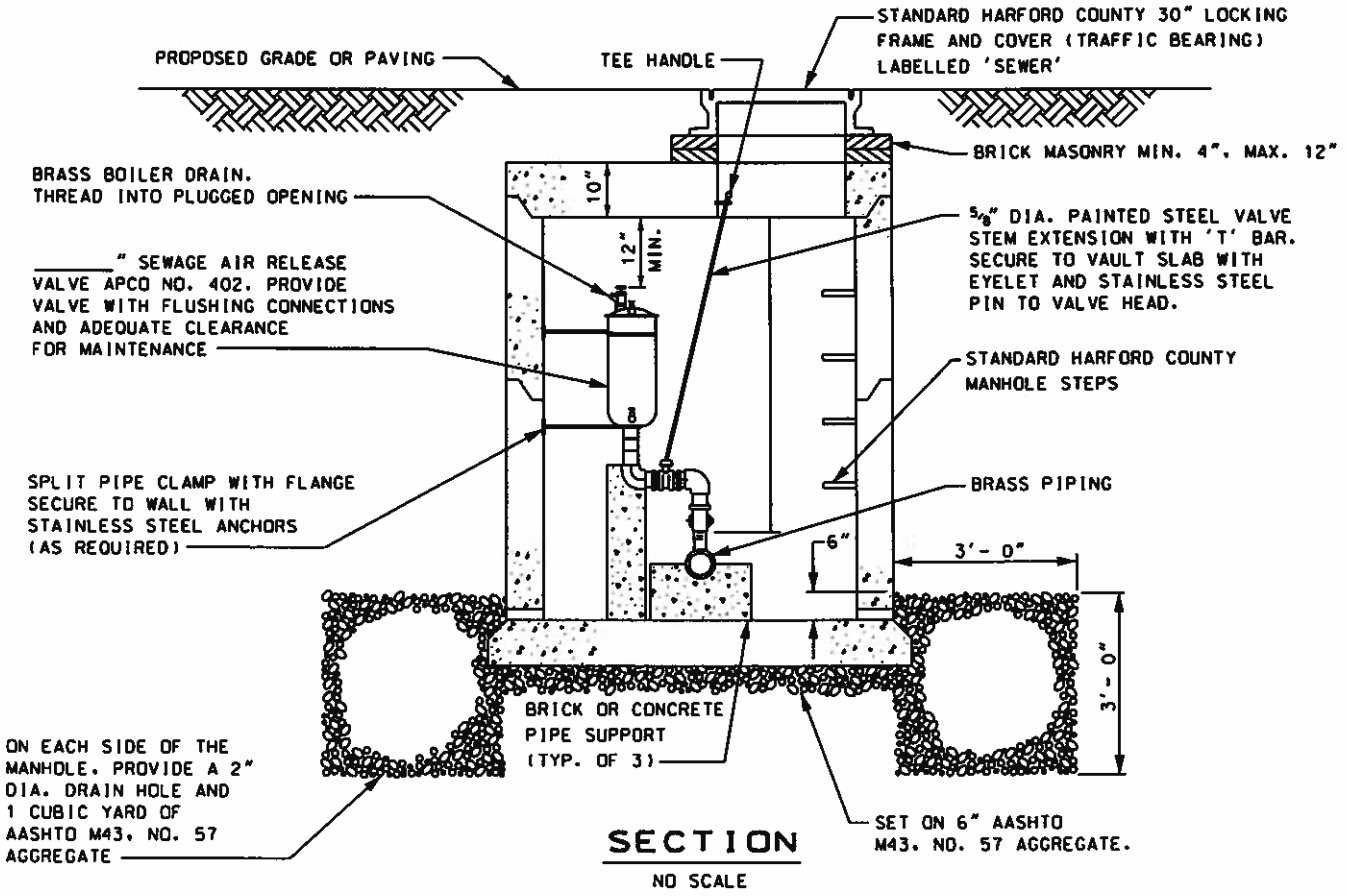

SECTION
NO SCALE

HARFORD COUNTY, MD
DEPARTMENT OF PUBLIC WORKS

LOW PRESSURE SEWER

LOW PRESSURE SEWER
AIR RELEASE VALVE
(FOR MAINLINE UP TO 2 1/2")

ISSUED 3/15/09
REVISED
REISSUED

PLATE LP-20

City Of Aberdeen

Aberdeen
Home of Opportunity

November 16, 2018

TO: GENERAL PUBLIC

RE: CITY OF ABERDEEN APPROVED LIST OF SUPPLIERS AND MATERIALS FOR WATER AND SEWER CONSTRUCTION

1. The Department of Public Works issues an addendum dated November 16, 2018 to the Harford County Part 27, dated Nov 10, 2014 for "Approved List of Suppliers and Materials For Water and Sewer Construction." The Changes become effective on the date noted above and are applicable within the Aberdeen's Water Distribution and Sewer Collection System for all areas that the City provides services.

2. For additional information contact the Department of Public Works at 410-272-1600 x 217

Sincerely,

Kyle Torster

Kyle E. Torster, P.E.
Director of Public Works

Cc:
Planning and Zoning

CITY OF ABERDEEN

Harford County, Maryland

DEPARTMENT OF PUBLIC WORKS

ABERDEEN WATERMAIN EXTENSION
CONTRACT NO. 21-12

APPROVED LIST OF SUPPLIERS AND MATERIALS FOR WATER AND SEWER CONSTRUCTION (27 pages)

HARFORD COUNTY

CITY OF ABERDEEN ADDENDUM

DEPARTMENT OF PUBLIC WORKS

DIVISION OF WATER AND SEWER

APPROVED LIST OF SUPPLIERS AND MATERIALS FOR WATER AND SEWER CONSTRUCTION

November 10, 2014

Reissued CoA Addendum November 16, 2018

DAVID R. CRAIG
HARFORD COUNTY EXECUTIVE

MARY F. CHANCE
DIRECTOR OF ADMINISTRATION

TIMOTHY F. WHITTIE, P.E.
DIRECTOR OF PUBLIC WORKS

JOEL V. CAUDILL, P.E.
DEPUTY DIRECTOR OF WATER & SEWER

HARFORD COUNTY GOVERNMENT

DEPARTMENT OF PUBLIC WORKS
DIVISION OF WATER AND SEWER

MEMORANDUM

DATE: November 10, 2014

TO: See Distribution List

FROM: Mary F. Chance
Director of Administration

RE: Revisions to Parts 25, 26, 27 and the addition of new Part 28 to the Rules and Regulations

Three parts of the Rules and Regulations of the Division of Water and Sewer have recently been revised and a new part has been added. Through public advertisement, a hearing was held on October 24, 2014 to discuss the proposed changes. Part 25- Design Guidelines, Part 26- Standard Specifications and Part 27- Approved Materials List were revised. New Part 28- Approved Contractors/Vendors for Auxiliary Water and Sewer Construction and Testing was added. The revised pages of these sections are attached.

The changes to the Rules and Regulations became effective on the date noted above. Please replace the current pages with the attached sheets in your copy of the Rules and Regulations. If you prefer, the complete document may be obtained in CD form from the Division of Water and Sewer or downloaded from the Harford County website in the next several weeks.

Enclosure
DWI/hs
Cc: David R. Craig, Harford County Executive
Kathryn L. Hewitt, Harford County Treasurer
Margaret Hartka, Law Department
Timothy F. Whittie, P.E., Director of Public Works
Joel V. Caudill, P.E., Deputy Director of Water and Sewer
Jacqueline K. Ludwig, Chief of Water and Sewer Administration and Engineering
Darryl W. Ivins, Engineer, Division of Water and Sewer

November 10, 2014

Reissued CoA Addendum November 16, 2018

The following Approved List of Suppliers and Materials for Water and Sewer Construction apply to the operation of the Division of Water and Sewer and is Part 27 of the General Rules and Regulations that are promulgated in accordance with Section 807 of the Harford County Charter.

November 10, 2014

Reissued CoA Addendum November 16, 2018

APPROVED LIST OF SUPPLIERS AND MATERIALS FOR WATER AND SEWER CONSTRUCTION

PART 27

City of Aberdeen Addendum*

HARFORD COUNTY
DEPARTMENT OF PUBLIC WORKS
DIVI*SION OF WATER AND SEWER

November 10, 2014

*November 16, 2018

HARFORD COUNTY, MARYLAND
DEPARTMENT OF PUBLIC WORKS
DIVISION OF WATER & SEWER

GENERAL RULES AND REGULATIONS

Table of Contents

PART 27 APPROVED LIST OF SUPPLIERS AND MATERIALS FOR WATER AND SEWER CONSTRUCTION 27-1

I. WATER MAIN CONSTRUCTION 27-2
II. SEWER MAIN CONSTRUCTION 27-9
III. WATER AND SEWER MAIN CONSTRUCTION 27-12
IV. LOW PRESSURE SEWER CONSTRUCTION 27-14

November 10, 2014

Reissued CoA Addendum November 16, 2018

November 10, 2014
Reissued CoA Addendum November 16, 2018

PART 27 APPROVED LIST OF SUPPLIERS AND MATERIALS FOR WATER AND SEWER CONSTRUCTION

The Chief of Facilities shall maintain the approved materials list. The amendment of the list shall be the result of an evaluation and recommendation of a committee of operations, maintenance, and engineering staff of the Water & Sewer Division periodically designated by the Deputy Director of the Water & Sewer Division. The list shall be utilized by contractors, suppliers, designers, and County staff when identifying materials which have been approved for use in the County water and sewer systems. This list of approved materials shall be utilized in construction or maintenance when the project specifications do not contain enough detail to identify every item. This list of approved materials is to be used or referenced in designs unless a material not contained in the list is otherwise approved for use in a specification package.

The supplier of a material not on the list may request inclusion of a product by pursuing the following evaluation procedures:

1. Materials must be presented with a request for inclusion in the approved materials list. The request may initially be for an individual or limited number of projects.

2. Five (5) copies of fact sheets, specifications, laboratory test results, drawing and significant information on applicability of use of the product must be presented before a request will be considered.

3. Documentation of approval for use for the proposed application by other local, state or federal water and sewer operations and construction agencies must be presented.

4. Depending on the nature of the product, factory visits and on-site visits to locations where the material or product is being utilized in construction and/or operation may be required as part of the evaluation process.

5. If evaluation of the aforementioned information is acceptable, the product may be approved for use on a trial basis in a developer-funded or County capital project. NOTE: Large quantities or extensive use in the trial installation will normally not be allowed.

6. The County reserves the right to have the product tested by an independent agency to assure that it meets the minimum requirements established in the Standard Specifications. In the event that the product does not meet the minimum requirements, the manufacturer will be responsible for all associated cost including, but not limited to, the test performed and any additional testing by Harford County. Should the product not pass a retest, the product will be removed from the Approved Material List.

7. If the trial installation produces satisfactory results, then after an appropriate time for observation, the material or product may be utilized on a limited basis.

8. Pending continued satisfactory performance and evaluation during the trial installation and limited use periods, the material or product may be added to the list of approved suppliers.

I. WATER MAIN CONSTRUCTION

1) PIPE, DUCTILE IRON (D.I.P)

Slip Joint	Restrained Joint
U.S. Pipe & Fdy.	T.R. Flex
Griffin	Snap Lock
American	Flex Ring Super
McWane	Lock
Atlantic States	Field Lock
Clow	Foster Adapter

Special Thickness Class
Note:
3" – 6" Class 52
8" - 12" Class 52
14" & above Class 52

2) PIPE, POLYVINYL CHLORIDE WATER

North American Pipe
J.M. Eagle
National Pipe & Plastic
Diamond

Note:
Rubber Ring Slip Joint Only
3" or smaller – SDR-21-200 psi
4"-12"-DR-14-200 psi

3) PIPE, CAST IRON (C.I.P.)

Not approved.

4) PIPE, WATER SERVICE
(3/4", 1", 1'1/2", 2")

Copper Tubing-Type K (All Sizes)
Halstead
Reading
Cerro
Mueller Tubing Company
Howell Metals
Cambridge-Lee
AWWA Approved PE Pipe
Copper Tubing Sized

5) FIRE HYDRANT, 5-1/4" VALVE OPENINGS - MECHANICAL JOINT

~~M&H Reliant Style 929~~
Mueller Centurion A-423
Kennedy Guardian K-81-A
~~American B-84-B~~
~~Clow-Medallion-F-2545~~
~~U.S. Pipe Metropolitan 250 Model 94~~

5a) YARD HYDRANTS

Murdock M-100, M-150, M-200
Kupferle

Note: Submit Shop Drawings for exceptions

6) PAINT FOR FIRE HYDRANTS "SCHOOL BUS YELLOW"

Sherwin-Williams - Yellow #B54Y157
Coronado #COR80-151-1

7) RESILIENT SEAT/WEDGE VALVES MECHANICAL JOINT (Flanged For Interior Use)

Sizes Thru 30" (AWWA C-509-01)
Clow Series F-6100 (4"- 48")
Kennedy Kenseal (4"-12")
M&H Style 4067 (4"-12")
Mueller Series A-2360-20 (4"-12")
U.S. Pipe V&H – USP-0-20 (4"-12")

Sizes 4" - 12" (AWWA C-515)
American Flow Control 2500 series (4"-12")
Clow 2638 series (4"-12")
Kennedy KS-RW series (4"-12")
M&H 7000 series (4"-12")
Mueller A-2361 series (4"-12")
U.S. Pipe – AUSP1 series (4"-12")

Sizes 14" - 36" (AWWA C-515-02)
American Flow Control Series 2500
Clow Series F-6100
Kennedy Kenseal
M&H Style 7571
Mueller Series A-2361-20
U.S. Pipe V&H – USP-1-20 (14"-48")

Sizes 24" and Above
Pre-approval required

Note:

1. Gearing required above 16"
2. 3"-36" Non-Rising Stem
3. 3"-16" OS&Y
4. Brass Test Plug
5. All valves are required to use 304 or 316 stainless bolts and nuts. The County may require 316 stainless fasteners to be used in lieu of 304 stainless in instances where it deems necessary.
6. All Valves Should be Clockwise to Close/ Counter-Clockwise to Open

8) BUTTERFLY VALVES (24" & LARGER) (Valve Shafts-Horizontal)

Submit shop drawings

9) VALVE, COMBINATION AIR/VACUUM RELEASE

Duo Matic/Kenetic*

1" on Mains thru 12"
Apco (Valve & Primer) 143-C 142
Valmatic 201-C 101
Cla-Val Series 36
A.R.I. D-040

2" on Mains 14"-20" (Where Specified)
Apco 145-C 144
Valmatic 202-C 102
Cla-Val Series 36
A.R.I.

*Kenetic-Harford County Model

10) TAPPING SLEEVE ONLY (MECH. JOINT)

U.S. Pipe
M&H Valve 6" – 12"
Mueller 4"-12" H-619(A.C.)
Mueller 4"-24" H-615 (C.I., D.I.)
Tyler Pipe 4"-12" S-149 (for C.I.),
S-349 (for A.C.) 4" – 12"
American Flow Control M.J. Sleeve -
D.I. 4"-36"
Full Circle Stainless Steel Tapping Saddles

14" and Greater For A/C Pipe (Pre-app. required)
JCM-414
Romac-FT425

Note:
1. 304 or 316 S.S. nuts and bolts
2. Coating – Epoxy (fusion), E-coat

11) FITTINGS-MECHANICAL JOINT-CEMENT LINED OR EPOXY COATED - D.I. 3"–48" (Flanged for Interior Use)

Star 3" – 48"
Tyler Fdy – 36"
Tyler Fdy./Union Fdy (C.I. upon request) – 3"- 48"
Clow – 4" – 30"
HarCo-PVC - Slip Joint with restraints
Union Fdy. (C.I. upon request)
Sigma 3" – 48"

Note:
1. 48" Class 350 D.I (AWWA C-53)
2. M.J. Fittings to be Cement Lined
3. Flanged Fittings to be Epoxy Coated where available
4. Flanged fittings to have 304 or 316 S.S. bolts w/brass nuts.

12) RETAINER GLAND DUCTILE IRON -WEDGED (For D.I.P. Only)

EBAA Iron Mega-A-Lug
Uni-Flange/Ford Wedge Action-Series 1400
Mueller Company-Aqua Grip (4"-12")
(Fire Hydrant and Valve Only)
Star Grip – 3000 series
Sigma – SLD – one lock
Tuf-Grip-Tyler-Union Foundry

Note: epoxy, nylon, mega-bond, e-coat, star bond.

13) PIPE COUPLING - FOR D.I.P., C-900, AC

*Ford - Style FC 2"-24"
*Smith-Blair - Style 441 2"-16"
*Romac - Style 501
*Hymax – 2000 2" – 16"
Hymax Grip / All Models
Mueller Maxi-Fit
Romac Alpha / All Models
*Submit shop drawing for A.C above 10" for approval
Note:
1. All couplings to be coated w/epoxy, nylon, e-coat.
2. 304 or 316 S.S. nuts and bolts

14) VALVE BOX SCREW-TYPE 2-PIECE 36"- 48" (5-1/4")
(3" Valves & Larger & Blow-off)

Bingham & Taylor #4905
Capital Foundry of Virginia, Inc. #564s
East Jordan #664-S

15) CURB-BOX LOCKING SCREW-TYPE (4-1/4")

Bingham & Taylor #4903
Capital Foundry of Virginia, Inc. #NH-138-H-UP

16) METER VAULT (18", 24", 30")

~~(Pre-Cast Concrete)-~~ **Plastic Enclosures Only**

Mayer Brothers, Inc.
Brands Comparable to Mid-States, Bingham & Taylor, Oldcastle, etc.

Note: No Bricks or Concrete Risers; Plastic Risers Only

WATER MAIN CONSTRUCTION

17) 18" METER FRAME & 12" or 15" COVER

A.Y. McDonald
- Frame # 74MACF18
- Single Hole Lid # 74MCL115T
- Double Hole Lid # 74MCL115TT

Bingham & Taylor
- Frame # CULF18018SP
- Single Hole Lid #IFL90301WS
- Double Hole Lid # IFL90322TRF

Capital Foundry of Virginia, Inc.
- Frame # MBX-3437-F
- Single Hole Lid # MBX-347-C-H
- Double Hole Lid # MBX-3437-C-2H

Ford Meter Box Company
- Frame # FA32C
- Single Hole Lid # C3L-T
- Double Hole Lid # C3L-TT

Vestal 32-482

18) EXTENSION RING

	18"x24"
Ford	Ext 1
Vestal	32-04332-ER1824
A.Y. McDonald	74MX1

	18"X30"
Ford	Ext 3
Vestal	32-047ER1830
A.Y. McDonald	74MX1

19) VALVE/METER VAULT, PRE-CAST CONCRETE, LARGE

Mayer Brothers, Inc.
Terre-Hill
Atlantic Precast
A.C. Miller/Fabcrete Pre- Piped Vault
Horne Concrete
Gillespie

Note: Vault manufacturers not NPCA certified may be permitted to supply vaults if other requirements can be met. Contact the Division of Water and Sewer Maintenance Section for details.

20) 4" FRAMES & COVERS FOR VALVE VAULTS and AIR-RELEASE MANHOLES

East Jordan Iron Works
E.A. Quirin Foundary
Neenah Foundary

24" Frame-1565-2001
Lid No-1565-5134

30" Frame-1568-2000
Lid No. 1568-5001

21) ALUMINUM METER VAULT DOORS (H-20 Loading)

BilCo
Syracuse Castings
Just-Set P.A. Insert (Har. Co. Spec.)

22) PRE-CAST VAULT TO PIPE LINE CONNECTOR

Atlantic Pre-Cast – A-Lock (<18° grade)
Z-Lock (<18° grade)
Terre-Hill Concrete Products – Dual Seal II
RX101 Water Stop
Hail Mary Rubber Company – Star Seal

23) JOINT PROTECTOR (Steel End Ring Concrete Pipe)

Flex-Protex Pipe Ring Protectors
MarMac Mfg. Company

24) SERVICE SADDLE

Ford Style FC-202
Romac 202N
Smith-Blair 317 Nylon-Coated
Mueller DN2S or DE2S
JCM – 406
Power Seal-3417

a. Specify type of pipe when ordering.
b. All saddles to be epoxy, nylon, or high density fusion plastic, E-Coat.
c. Pre-sized for PVC pipe.

25) INSIDE METER SETTING

~~**Note: Plumbing Department Use Only**~~

No Inside Meter Setters on Residential Applications

~~5/8" Meter #1 Handyhorn:~~
~~Ford #HH1-34G~~
~~McDonald 742-1----TT33~~
~~Mueller 200- 1412 (State Size)~~

~~3/4" Meter Kornerhorn:~~
~~Ford 02A-95277 w/2 ea. PJA4-44G McDonald 741-3----PP55~~
~~w/2 ea. 74754 T (1" x 1-1/4")~~
~~Mueller 330-H1442----02 (State Size)~~

~~Sweat Joint~~
~~5/8" McDonald-743-1----SS33~~
~~¾" N/A~~
~~5/8" Ford - #1 Copper Horn~~
~~¾" N/A~~

November 10, 2014

Reissued CoA Addendum November 16, 2018

26) CORPORATION STOP, COMPRESSION JOINT

3/4"-2"
Ford ~~FB-1000 Gripper Joint~~ Compression Q Fitting
Mueller ~~B-25008 110~~ Compression Q Fitting
McDonald ~~74701Q~~ Compression Q Fitting

27) CURBSTOP, THREADED

3/4"-2"
Ford ~~B-11 Series~~ Compression Q Fitting
Mueller ~~B-20283~~ Compression Q Fitting
McDonald ~~76101~~ Compression Q Fitting

28) CURBSTOP, COMPRESSION JOINT

Ford ~~B-44 Series Gripper Joint~~ Compression Q Fitting
Mueller ~~B-25209N 110~~ Compression Q Fitting
McDonald ~~76100Q~~ Compression Q Fitting

29) COUPLING, COPPER COMPRESSION JOINT

Ford ~~C-44 Series Gripper Joint~~ Compression Q Fitting
Mueller ~~H-15403N 110~~ Compression Q Fitting
McDonald ~~74758Q~~ Compression Q Fitting

30) Y-BRANCH COUPLING, COMPRESSION

Ford: 1" x 3/4" x 3/4" Y-44-243G ~~Gripper Joint~~ Compression Q Fitting, 1½" x 1" x 1" Y-44-264G Compression Q Fitting

*Mueller: ~~H-15343N~~ 110 Compression Q Fitting
*A.Y. McDonald: ~~7087SQ~~ Compression Q Fitting

*Specify Size

31) CATHODIC PROTECTIVE CAP NUT
(Oversized)

Protector Cap
Trumbull Industries
Mars Co.

32) DISMANTLING JOINT

Smith-Blair Series 975
Romac DJ-400
Uni-Flange
Note:

1. W/S.S. tie-rods and nuts, w/epoxy, nylon, or e-coat coating.
2. 304 or 316 S.S. bolt w/brass nuts.

33) FLANGE PIPE/ADAPTOR

Flanged end spool piece to be used, Minimum working pressure 200 psi
Hymax
EBAA-2100 Series
Uni-Flange

Note:

1. Pre-approved only.
2. Epoxy, nylon, e-coat coating.
3. 304 or 316 S.S. bolt w/brass nuts.

34) INLET YOKE ANGLE VALVE: Note 1

	5/8"	3/4"	1"
Ford	~~AV94-313WG~~	~~AV94-324WG~~	~~AV91-444W w/C84-46G~~
Mueller	~~*H-14273N~~	~~*H-14278N w/H-15928N~~	~~B24278N W/H15428N~~
~~A.Y. McDonald~~	~~74602YQ~~	~~74604Y w/4753Q~~	~~74644BY w/4753Q~~

*Specify size of service.

35) METER YOKE ASSEMBLY: Note 1

	5/8"	3/4"	1"
Ford	~~Y501~~	~~Y503~~	~~Y504~~
Mueller	~~H-5010~~	~~H-5030~~	~~H-5040~~
~~A.Y. McDonald~~	~~14-1~~	~~14-3~~	~~14-4~~

*Epoxy, E-Coat, etc.

36) OUTLET YOKE DUAL CARTRIDGE CHECK VALVE: Note 1

	5/8"	3/4"	1"
Ford	~~HHCA94-313~~	~~HHCA91-323 w/C84-34G~~	~~HHCA91-444 w/C84-46G~~
Mueller	~~*H-14466-A~~	~~*H-14464-A w/H-15428~~	~~*H-14464-A w/H-15428~~
~~A.Y. McDonald~~	~~712-3YT23~~	~~*712-3YE33 w/4753Q~~	~~*712-3YE44 w/4753Q~~

*Specify size of service.

37) EXPANSION CONNECTION: Note 1

	5/8"	3/4"	1"
Ford	~~EC-1~~	~~EC-23~~	~~EC-4~~
~~Mueller~~	~~---~~	~~---~~	~~---~~
~~A.Y. McDonald~~	~~714-1E~~	~~714-2E~~	~~714-4E~~

38) YOKE GASKETS: Note 1

	5/8"	3/4"	1"
Ford	~~GT112~~	~~GT118~~	~~GT123~~
Mueller	~~500844~~	~~500845~~	~~311335~~
~~A.Y. McDonald~~	~~14-1G~~	~~14-2G~~	~~14-4G~~

39) YOKE NUTS: Note 1

	5/8"	3/4"	1"
Ford	~~YLN-1~~	~~YLN-23~~	~~YLN-4~~
Mueller	~~509326~~	~~509316~~	~~526268~~
~~A.Y. McDonald~~	~~14-1N~~	~~14-2N~~	~~14-4N~~

Note: 1 Items 34 thu 39: METER SETTERS ONLY, No Cast Iron Yoke Style Setters, No Expansion Style Connections, Ford 'Coppersetter 70 & 80 Series & Resetter 40 Series' styles only (or Mueller Equivalent) with Lockable Angle Ball Valve Inlet and Angle Cartridge Dual Check Outlet, CTS Compression 'Q Fittings' . Appropriate height should be based on bury depth of service line, sizes should be based on size of meter and requirements of service customer, Submit Shop Drawings for Approval

40) THREADED BRASS FITTINGS

All Manufacturers

WATER MAIN CONSTRUCTION

41) BALL VALVE BRASS

	3/4"	1"	11/2"	2"
Ford	B-11-333	B-11-444	B-11-666	B-11-777
Mueller	20283+Size	20283+Size	20283+Size	20283+Size
~~A.Y. McDonald~~	~~76101+Size~~	~~76101+Size~~	~~76101+Size~~	~~76101+Size~~

42) LOCK-WING BALL VALVE BRASS

	3/4"	1"	11/2"	2"
Ford	B-11-333-W	B-11-444-W	B-11-666-W	B-11-777-W
Mueller	20200-W+Size	20200-W+Size	20200-W+Size	20200-W+Size
~~A.Y. McDonald~~	~~76101WW+Size~~	~~76101WW+Size~~	~~76101WW+Size~~	~~76101WW+Size~~

43) DUST CAP

Niagara

44) BRASS PIPE – THREADED

All Manufacturers

45) OUTSIDE DOMESTIC WATER SERVICE COMPLETE (3/4")

See Standard Detail for material needed

46) OUTSIDE DOMESTIC WATER SERVICE COMPLETE (1")

See Standard Detail for material needed.

47) WATER METERS

5/8" ~~(As per Yearly Bid)~~
~~Badger Model 25~~
~~Hersey Products Model 430~~
~~Sensus iPerl~~

3/4" ~~(As per Yearly Bid)~~
~~Badger Model 35~~
~~Hersey Products Model 442~~
~~Sensus iPerl~~

1" ~~(As per Yearly Bid) - [Application Varies]~~
~~Badger Model 70~~
~~Hersey Products Model MVR-50~~
~~Sensus iPerl~~

1-1/2" ~~(As per Yearly Bid) - [Application Varies]~~
~~Badger Model 120~~
~~Hersey Products MVR-100~~
~~Elster Amco EVOQ4~~

2" ~~[Application Varies]~~
~~Hersey Products, Inc.~~
~~(MVR Model 160)~~
~~Elster Amco EVOQ4~~

3" ~~[Application Varies]~~
~~Hersey Products, Inc.~~
~~(MVR Model 350)~~
~~Elster Amco EVOQ4~~

4"-6" ~~[Application Varies]~~
~~Hersey Products, Inc.~~
~~(MVR 650, MVR 1200)~~
~~Elster Amco EVOQ4~~

6"-12" ~~[Application Varies]~~
~~Elster Amco EVOQ4~~

~~3/4" - 1": Neptune Mach 10 E-Coder R900i Meter~~

~~1.5" - 12": Master Meter Octave Meters with Neptune R900i Box~~

~~Submit Shop Drawings for any exceptions~~

November 10, 2014

Reissued CoA Addendum November 16, 2018

48) WATER METERS FOR FIRE FLOW

~~5/8" - N/A~~
~~¾" - Hersey Meter Co. – FSMVR-30, Sensus iPerl 1"~~
~~- Hersey Meter Co. – FSMVR-50, Sensus iPerl~~

3/4", 1": Neptune Mach 10 E-Coder R900i

~~1½" - Hersey Meter Co. – FSMVR-100, Elster EVOQ4~~
~~2" - Hersey Meter Co. – FSMVR-160, Elster EVOQ4~~
~~3"-12" Elster Amco EVOQ4~~

1.5" - 12": Master Meter Octave Meters with Neptune R900i Box

Submit Shop Drawings

49) BACKFLOW PREVENTERS

Apollo Valves/Conbraco Industries, Inc.

Apollo Model DCLF4A	½" – 12"
Apollo Model RPLF4A	3/4" – 12"
Apollo Model DCDALF4A	2 ½" – 12"
Apollo Model RPDALF4A	2 ½" – 12"
Watkins	½" – 12"
Zurn	½" – 12"

Note:
1. Retest and certification required before operational approval.
2. All reduced pressure models require air gap funnel drain.

50) AUTOMATIC FLUSHING & MONITORING SYSTEMS

1. Mueller Hydro-Guard or Equivalent

II. SEWER MAIN CONSTRUCTION

1) PIPE, POLYVINYL CHLORIDE (PVCSP)

North American Pipe
J.M. Eagle
National Pipe & Plastic
Diamond

Note:
4" thru 6" Class SDR-26 Heavy Wall
8" thru 15" Class SDR-35
18" thru 24" PS115 ASTM F679 and F1336

2) PIPE, DUCTILE IRON - Not Permitted in the City of Aberdeen

~~Slip Joint~~	~~Restrained Joint~~
~~U.S. Pipe & Fdy.~~	~~T.R. Flex~~
~~Griffin~~	~~Snap Lock~~
~~American~~	~~Flex Ring~~
~~McWane~~	~~N/A~~
~~Atlantic States~~	~~N/A~~ Super
~~Clow~~	~~Lock~~

~~**Special Thickness Class**~~
~~Note:~~

~~3" thru 6"~~	~~Class 52 min~~
~~8" thru 12"~~	~~Class 52 min~~
~~14" & above~~	~~Class 52 min~~

~~Double Cement Lined~~

3) FORCE MAIN SEWER PIPE

2"-3"	- Rubber Ring Slip Joint
	- SDR 21, Class 200 PVC
3"	- ~~D.I.P. Class 52~~
	- D.I.P. Sized HDPE
	- Restrained Joint PVC
4"-12"	- DR 14 - C-900 PVC
	- ~~D.I.P. - Class 52~~
	- D.I.P. Sized HDPE
	- Restrained Joint PVC
Over 12"	~~- D.I.P. - Class 52~~
	- D.I.P. Sized HDPE
Note:	- Restrained Joint PVC

1. Refer to Water Main Materials for approved manufacturers
2. All D.I.P. is to be special thickness class.
3. Double cement Lining.
4. DR Rating based on Pressure

4) MANHOLE, PRECAST CONCRETE

Atlantic Precast
Concrete Pipe & Products
Terre-Hill
Monarch Products Company, Inc.
Hanson Products
Advanced Drainage Structures

5) MANHOLE TO PIPE LINE CONNECTORS
(Grades>18% and <45%)

A-Lok - Z-Lok Products

6) MANHOLE TO PIPE LINE CONNECTORS
(<18%)

A-Lok - Atlantic Precast
Dual Seal II - Terre-Hill Concrete Products
Star-Seal (greater than 16")

7) BUILT IN-PLACE MANHOLE TO PIPE LINE CONNECTORS

A-Lok Field Kit - A-Lok Products
Z-Lok Field Kit - A-Lok Products

Note: 18% grade = 10.2°
19.5% grade = 11°

8) CORED MANHOLE GASKETS

A-Lok - A-Lok Products
Link-Seal - Thunderline Corp.
Z-Lok XP - A-Lok Products
Kor-N-Seal - National Pollution Control Systems, Inc.
Model S406-12APW

Note: All gaskets require two S.S. bands

9) PLUGS - SEWER (WING-NUT)

Cherne Industries Inc. - "Gripper"
R.C. Graham - "Hand-Tite"
Circle Gas Manufacturing

November 10, 2014

Reissued CoA Addendum November 16, 2018

SEWER MAIN CONSTRUCTION

10) FITTINGS

~~Molded 4"-8"~~
~~HarCo-PVC~~
Multi-Fitting-PVC
(Thru 15")
Plastic-Trend-PVC
G.P.K. Products, Inc.

Fabricated 10"& Larger
Multi-Fitting-18"-36"
Freedom-10"-36"
Nyoplast-10"-36"
B&H Inc.-10"-15"
G.P.K. Products, Inc. 10"-27"

PVC 6"-8" Wye, 45º Bend
Plastic Trends SDR-26
HarCo SDR-26
Multi-fitting – SDR-26
G.P.K. SDR-26

D.I.P. 6"-8" Wye, 45º Bend
HarCo
Hersey Products, Inc.

Note (applies to Hersey ONLY):

1. Fusion, bonded epoxy, nylon, e-coat lining.
2. < 4" – Fusion bonded epoxy.
   Interior double cement lined
3. All Ductile Fittings to be lines with Protecto401 or Comparable Product

11) PLASTIC STEP

M.A. Industries, Inc.

12) SADDLE

Geneco Sealtite (Specify type pipe)
Romac "CB" (Any type pipe)

Note: To be epoxy, nylon, or E-coated.

13) LAMPHOLE FRAME & COVER
Capitol Foundry of Virginia, Inc.
Frame & Cover No. #VB-9*S
East Jordan Iron Works, Inc.
Frame Model No. 1565Z
Lid Model No. 1565A
Neenah Foundry Company
Frame Model No. 1976-0001
Lid Model No. 1976-0032

14) MANHOLE FRAME & COVER (STANDARD)
Capital Foundry of Virginia
Item No. MH-1676 HAR-SS-STR
Neenah Foundry Company
Frame Model No. 1565-2300
Lid Model No. 1565-5120
East Jordan Iron Works, Inc.
Frame Model No. 1545Z3
Cover Model No. 1544A

15) MANHOLE FRAME AND COVER (WATERTIGHT)
East Jordan Iron Works, Inc.
Frame Model No. 2060ZVHPT
Cover Model No. 2065AVHPT
Neenah Foundry Company
Model No. 0785-015

16) BRICK - SM GRADE

Redland Brick
Glen-Geary Brick Co.
Pine Hall Brick
Lawrenceville Brick
McAvoy Cobset Brick

17) GRADE RINGS (6" MAXIMUM HEIGHT) W/STEEL REINFORCEMENT

Atlantic Pre-Cast
Terra-Hill Products
Cretex Pro-Rings

18) MANHOLE PAINT FOR FRAME & COVER (OFF-SITE)

Day-Glo
(Florescent Green Industrial Enamel)
DG215-18 (Signal Green)

19) MANHOLE PAINT FOR FRAME & COVER (OFF-SITE)

(White Primer)
Coronado-Grip & Seal – 116-11 White

20) ADAPTOR (FROM 6" HOUSE CONNECTION TO CAST-IRON SOIL PIPE)

Fernco
~~Calder~~
IND Seal
Fernco Sheerguard
GPK Products/Indiana Seal

November 10, 2014

Reissued CoA Addendum November 16, 2018

SEWER MAIN CONSTRUCTION

21) PVC RISER PIPE – CLEANOUT (SDR-26 - HEAVY WALL SEWER)

J.M. Eagle
National Pipe & Plastic
Diamond
North American Pipe

22) SOIL PIPE (CAST-IRON HEAVY DUTY)
(Cleanout Riser 4")

Tyler
Charlotte

23) RETAINER GLAND-WEDGED (FOR D.I.P.)

Ebba Iron Meg-A-Lug
Uni-Flange/Ford Wedge Action Series 1400
Star Grip – 3000 Series
Sigma
Tuf-Grip-Tyler-Union Foundry

Note:
Coating - Epoxy, nylon, Mega-Bond, e-coat, star bond.

24) AIR & VACUUM VALVES

Apco
Val-Matic
Cla-Val
A.R.I. D-020, D-025

Note: As per shop drawing.

25) MASTIC ROPE SEAL (3/4")

K.T. Snyder – "Rubber-Nek"
Press Seal Gasket Corporation
Conseal

26) CLEANOUT - HUB & CAP
(Penella Style 4" & 6")

Penella Industries - PVC w/Magnet
Jumbo Manufacturing Company -
Cast Iron w/Gasket
Circle Gas Manufacturing Company -
Cast Iron w/Gas
K.T. Snyder - "Rubber-Nek"

27) STAINLESS STEEL MANHOLE INSERT W/RELIEF VALVE

Southwestern Packing & Seal Company
- S.S. Rainstopper
Parson Environmental Products, Inc.
- Stainless Steel Manhole Insert

28) MANHOLE INSERT W/ODOR CONTROL

Calgon "Sweet Street"
Parson Environmental Products, Inc.

29) MANHOLE EXTERIOR JOINT WRAP – 12"

Conseal – Con-Wrap CS-212
Press-Seal-EZ-Wrap
Cretex External X85 Seal

III. WATER AND SEWER MAIN CONSTRUCTION

1) STEEL CASING PIPE

Approved after shop drawing submittal.

2) LINER PLATE

Approved after shop drawing submittal.

3) DETECTOR TAPE
(3" Non-Metallic)

Lineguard
Allen Systems
Linetec
Empire Level

4) TRACER WIRE
(7 Strand No. 8 w/.045 PE Wall Blue)

All Manufacturers

5) SOLDERLESS SPLIT BOTTOM CONNECTORS

Brass

6) SPLICING TAPE-UNDERGROUND

3M

7) BITUMINOUS COATING
(Military Spec. C-18480)

All Manufacturers

8) COAL TAR EPOXY
(16 Mil D.F.T. Min)

All Manufacturers

9) NON-SHRINK EPOXY GROUT

All Manufacturers

10) CATHODIC PROTECTIVE CAP NUTS
(Oversized)

Protector Cap
Trumbull Industries
Mars Co.

11) REPAIR CLAMPS

4" - 15" Two-Section
Smith-Blair 262
Ford Style FS2
Romac Style SS2 Powerseal
Style 3122 AS
Hymax – Easy Max
FS1 Style Full Circle

16" and above Three-Section
Ford Style FS3
Smith-Blair Style 263 Romac
Style SS3 Powerseal Style
3123 AS
FS1 Style Full Circle

12) 2-1/2" TRACER TEST BOX W/TERMINAL BLOCK
Bingham & Taylor – P-200 Test
Copperhead/Snakepit

Note:
1. Blue lid for water. Green lid for sewer
2. Test location at fire hydrant

13) 5" TERMINAL BOARD (THREE TERMINALS)

W/STANDARD 4-1/4" LOCKING CURB-BOX

Bingham & Taylor –

Note:
1. Blue lid for water. Green lid for sewer

14) INTERIOR MANHOLE COATING
Sentry Polymers, Inc.
Epoxy Vinyl Ester (Semstone 5301)

15) PIPE SUPPORT/SPACER FOR SLEEVE PIPELINE
Products, Inc.
J-Four-M33-s.s.
Raci-casing spacer
CCI Pipeline System C558

16) SLEEVE/CARRIER PIPE END SEAL
CCI Pipeline Systems
Model ESC
Model ESW

WATER AND SEWER MAIN CONSTRUCTION

NOTE:
*The classes or designations of pipe shown on this list are the classes that are normally used in water and sewer construction in Harford County.

However, it is possible that the Contract Documents, Special Provisions and/or Plans may specify a class or designation that is different and/or greater than that shown on the list. In the event of such a discrepancy, then the Contract Documents, Special Provisions and/or Plans shall govern.

**The Packer Head pipe procedure will not be used.

IV. LOW PRESSURE SEWER CONSTRUCTION

1) PIPE HDPE

1 ½" – 4" SDR-11 IPS EHMW PE3408
Performance Pipe Prod-Driscoplex 4300
Poly Pipe
Flying W
J.M. Eagle
Charter Plastic

2) PIPE-HDPE FITTING/TRANSITION PIECES - BUTT FUSION TYPE

(**Pressure Rated to Match System Piping)**

Molded 1 ½" - 4"	D.I.P.	Brass 1 ½" – 4"
IPEX	HarCo	All Manuf.
Central Plastic		
Charter Plastic		
TEGG		
Agru		
Independent		

3) PIPE-PVC PIPE GASKETED - (SDR-21- 1 ½"- 4")

PVC	D.I.P.	Brass 1 ½" – 4"
National	HarCo	All Manuf.
Charlotte		
Crestline		
J.M. Eagle		
Diamond		
North American Pipe		

Note:
1. PVC pipe fittings for main line – match pipe material.

4) BALL VALVE CURB STOP - W/FEMALE IPT END CONNECTION (OR PACK JOINT)

	Manufacturer	Female IPT End	Pack Joint
1 ½"	Ford	B11-666	B77-666
	Mueller	B-20283+Size	V-25226
	McDonald	6101	6100-44
2"	Ford	B11-777	B77-777
	Mueller	B-20283+Size	V-25226
	McDonald	6101	6100-44

5) SEWAGE GRINDER PUMPING UNIT AND CONTROL PANEL

Environment/One Corporation

6) VALVE KEY EXTENSION

Genco

7) FITTINGS FOR LP 2-5-

D.I.P	Brass Ball Valve	Brass
HarCo	Ford	All Manufacturers
Hersey	Mueller	
	A.Y. McDonald	

Note:
D.I.P Fittings – Cement Lined

8) ROADWAY BOXES – VALVE - 5 ¼" (SCRW TYPE)

Bingham & Taylor 4905
Capital Foundry of Virginia, Inc. #564s
East Jordan 664-S

9) FIRE HOSE COUPLING W/ CAP - 2 ½"-BRASS NST THREAD

Potter-Roemer
Red Head/Dixon
Thompson Industrial

10) NIPPLE/RISER - D.I.P/BRASS 2"- 4" NPT THREAD

HarCo – D.I.P
Brass – All Manufacturers

11) CONCRETE VAULT - 24"

Mayer Brother, Inc.

12) TRACER WIRE
(7 Strand No. 8 w/.045 PE Wall Blue)

All Manufacturers

13) FRAME AND COVER - 24" - 24" X 4" – STANDARD SEWER

East Jordan
Campbell Fdy.
Neenah – Frame – NF-15652001
Lid-NF-15655134

14) R/S GATE VALVE – 3" AND GREATER

*See water main construction for approved manufacturers.

15) ADJUSTMENT RING – 24"

East Jordan Infra-Riser

CITY OF ABERDEEN

Harford County, Maryland

DEPARTMENT OF PUBLIC WORKS

ABERDEEN WATERMAIN EXTENSION
CONTRACT NO. 21-12

SUPPLEMENTAL SPECIFICATIONS – MODIFICATIONS TO HARFORD COUNTY STANDARD SPECIFICATIONS AND DETAILS FOR WATER AND SEWER MAINS

(41 pages)

SUPPLEMENTARY SPECIFICATIONS

MODIFICATIONS TO HARFORD COUNTY DEPARTMENT OF PUBLIC WORKS DIVISION OF WATER AND SEWER – STANDARD SPECIFICATIONS AND DETAILS FOR WATER MAINS AND SEWER MAINS

These Supplementary Specifications amend or supplement the Harford County Department of Public Works Division of Water and Sewer – Standard Specifications and Details for Water Mains and Sewer Mains (Amended 11/10/2014). All provisions which are not so amended or supplemented remain in full force and effect.

- General – Where the "General Provisions – Section 01000" of the Harford County Standard Specifications conflicts with the "General Conditions of the Construction Contract – Section 00700", requirements of the "General Conditions of the Construction Contract – Section 00700" take precedence.

- General – Replace all references to "Harford County Government", "Harford County", "County", "Harford County Department of Public Works", and "Department", with "City of Aberdeen", when these terms are intended to refer to the Project Owner.

- Section 01000 – General Provisions. Replace the definition in Paragraph 1.0.R with the following:

  DIRECTOR shall mean the City of Aberdeen's Public Works Director, acting for the City or its duly authorized agents, said agent acting severally within the scope of the Particular duties entrusted to him.

- Section 01000 – General Provisions. Replace the definition in Paragraph 1.0.Z with the following:

  OWNER shall mean the City of Aberdeen.

- Section 01000 – General Provisions. Add the following paragraph to the end of Paragraph 4.H

  The City will obtain approval for the staging areas on private property that are shown on the plan. The Contractor shall coordinate with the City prior to setting up any of the staging areas. If the Contractor proposes a staging area that is not shown on the plans, the Contractor shall be responsible for obtaining written permission from the appropriate landowner. The Contractor shall also be responsible for obtaining approval from the Harford County Conservation District for the staging areas that are not shown on the contract plans.

- Section 01000 – General Provisions. Add Paragraph 4.I.3 immediately following Paragraph 4.1.2

  The bid form includes estimated quantities for items that are incidental to other bid items. These quantities are provided for informational purposes only. The Contractor shall not be entitled to any compensation over and above unit price bid due to any increase or decrease in any amount of the incidental items. The Contractor shall have no claim for damages on account of loss of anticipated profits because of such increase or decrease in any amount of the incidental items.

- Section 01000 – General Provisions. Add Paragraph 6.D.3 immediately following Paragraph 6.D.2.

The City will obtain the following permits for this project. The Contractor is responsible for complying with all permit conditions.

- E&S and Grading Plan (Coversheet signed by Harford County Conservation District Enclosed, 1 sheet). Contractor shall be responsible for keeping a copy of the signed E&S plan on site, and following the conditions on the Plan.

- Maryland Department of the Environment (MDE) Joint Federal/State Application for the Alteration of Any Floodplain, Waterway, Tidal, or Nontidal Wetland in Maryland. (Permit enclosed, 3 pages)

- MDE Consent Order Approval for discharges of stormwater associated with construction activity (Approval letter enclosed, 4 pages)

- Maryland Department of Transportation State Highway Administration (MDOT SHA) Utility Permit. The Contractor is responsible for complying with all permit conditions. (Permit enclosed, 3 pages)

- MDOT SHA Traffic Control Permit. Contractor shall be responsible for providing the required notifications (Permit enclosed, 2 pages)

- CSX Transportation, Inc. Facility Encroachment Agreement (23 pages) The Contractor is responsible for complying with all permit conditions. ***The Contractor shall provide CSX with the executed "Schedule A – Contractor's Acceptance" and insurance certificate. Work cannot be scheduled until this information is approved by CSX. The contractor will be responsible for scheduling the work in the CSX right of way per the instructions in the enclosed email from Anne Jackson.***

- Section 01000 – General Provisions. Add the following paragraph to 2.0 Proposal Requirements and Conditions, A. Preparation of Bid:

4. The Basis of Design and permitting was based on an open cut pipe installation with Horizontal Direction Drilling (HDD) at the locations noted on the contract drawings. The Owner will give consideration to HDD installation of the entire proposed water main. Two bid forms are provided in the contract documents. Only one bid form needs to be filled out, but both forms must be returned. Owner will determine the lowest responsible bidder based on the bids received.

    a. If a Contractor proposes to complete the entire project by HDD drilling, the following items are required:

        i. Two (2) tracer wires must be pulled at all locations

        ii. The CSX crossing must still be completed by Boring and Jacking with casing and 12" PVC water main per the bid form.

        iii. Transition to 12" DIP at Air Release Valves will be required per the contract details.

        iv. Valves, fire hydrants, and air release valves must still be installed at the locations shown on the contract drawings.

v. Contractor will be required to maintain a minimum 5’ depth to top of pipe and maintain a minimum 1 foot vertical and horizontal separation between water main and existing utilities.

vi. Contractor will be responsible for traffic control and restoration of disturbed areas as directed by MSHA.

vii. Contractor will be responsible for obtaining approval for all staging areas not shown on the plans and required for HDD.

viii. Quantity estimates are not provided for the following incidental items: fittings, restraining gaskets, concrete jersey barriers, paving, restoration and thrust blocks. The actual quantity of these incidental items will be based on the Contractor’s means and methods.

- Add Section 02310 A – Installation of HDPE Pipe via Horizontal Directional Drill

This section consists of all pressure pipe installation that will be permitted to be installed by horizontal directional drilling methods (HDD).

High Density Polyethylene (HDPE) Pressure Rated Pipe and Fittings shall be DR 11, pressure rated to 200 PSI, and sized according to the Ductile Iron Pipe Size (DIPS). Materials used for the manufacturer of HDPE pipe and fittings shall be high density, black PE 4710 resin conforming to ASTM D3350. Pipe shall be in conformance with AWWA C906. Pipe and fittings to be butt fused. Pipe shall be manufactured in accordance with ASTM F-714. Fittings shall be manufactured by the same manufacturer of the pipe and in accordance with ASTM D-3261. Mechanical Connectors/Couplings shall be gripper type with stainless steel stiffeners for connections between HDPE and other pipe materials. The coupling shall be specifically designed for use on HDPE pipe and provide joint restraint. All pipe shall be NSF 61 approved. Pipe inside diameter shall be minimum 12”. Pipe outside diameter shall be DIPS sizing. Pipe shall have Blue color stripes.

The Contractor shall provide and pay for any materials as may be required, which are necessary for the execution and completion of the work involved in the installation of the HDD.

The Contractor shall retain the services of a horizontal directional drilling specialist who can provide at least three (3) references of previous similar projects completed requiring similar skills.

The Contractor shall submit a complete detailed design procedure and method for each installation showing the following as a minimum:

1. Layout sketches, indicating pit dimensions and locations.
2. Proposed line and grade of the drilling.
3. Complete details and specifications of the materials and equipment to be used to compete the drilling installation.
4. Size and type of drill pipe.
5. Drilling fluid information.

6. Drilling fluid disposal plan.
7. Sequence of operations.
8. A list of personnel and their qualifications and experience (including back-up personnel in the event that an individual is unavailable).
9. A safety plan.

If an obstruction is encountered that prohibits the forward action of the drilling operation or pipe installation, and it becomes evident that it will be impossible to advance the drill head or the pipe, operations shall cease and the pipe will be abandoned in place and filled completely with grout. Drilling shall restart at a second location. Any such additional cost associated with such a restart at a new location shall be borne by the contractor.

The HDD operation, once started, shall be continuous until the HDD is completed.

The rig shall be capable of the push/pull capacity, rotational speed, torque, and horsepower requirements, including size and capacity of the drilling fluid pump, to successfully complete the HDD.

During construction, the surfaces of all areas including, but not limited to roads, streets, and driveways shall be maintained on a daily basis to produce a safe, desirable, and convenient condition. Streets shall be swept and flushed after backfilling, and recleaned as dust, mud, stones and debris caused by the work, or related to the work again accumulates. The construction site shall be left clean at the end of each working day to the satisfaction of Engineer.

The Contractor shall keep drilling logs. These logs shall include specific dates, time and locations (x, y, z positioning), soil conditions, drilling data such as depth, angle, rate of penetration, and utility crossings. Drilling logs shall be accurate to facilitate the production of as-constructed / record drawings. The “x,y,z” locations shall be no further than 30’ apart. Four (4) copies of the drilling logs shall be provided to the Engineer.

The HDD Contractor shall calibrate its tracking and locating equipment at the beginning of each work day.

The HDD Contractor shall monitor and record the alignment and depth readings provided by the tracking system every 5 feet.

All drilling operations shall include reaming of the pilot hole prior to installation of the product line. The pilot hole shall be reamed to a minimum size of 1.5 times outside diameter of the product line. Reamer shall be chosen to match the soil conditions encountered.

A wireline steering tool system shall be used for all drilling over 500’,or drilling beneath a water course. Short shallow drilling operations may be guided via a walkover system subject to the approval of the Engineer.

The driller shall use two-way radio or cellular phone communication between the drill rig operator and the pipe pull-back crew to assure that the pipe begins moving immediately upon the operator’s commencement of the pull-back operation.

The drill pipe shall be connected to the product line using a pull head or pulling eye and swivel. A reamer shall be placed between the drill pipe and pull head to insure that the hole stays open during the pull-back.

The Contractor shall employ the services of a certified fuser. The entire length of the pipe, for the drilling operation, shall be fused prior to installation. Contractor shall provide all necessary rollers to accommodate movement of the pipe above ground during the pull-back operation. Contractor

shall provide necessary means (i.e. scaffold mounted rollers with a minimum vertical clearance) to maintain access roads and driveways during pull-back operations.

The amount of HDD watermain shall be measured in accordance with Section 02660

Payment for HDPE directional drilling will not be made, as it shall be included in the unit price item for HDPE pipe, Section 02660. Payment shall include clearing and grubbing.

All restoration for pits, service access, etc. shall be in accordance with the requirements of the project manual.

- Section 02660 – Water Mains. Add the following paragraphs immediately following Paragraph 2.E.4.c

  d. Mechanical Joint Restraint between C-900 PVC Watermain and Compact Mechanical Joint Fittings shall be the EBAA Series 2000 PV Megalug restraining system

  e. Joint restraint for PVC push-on type pipe shall be provided on a minimum of 2 pipe lengths (minimum of 40') on each side of <u>any</u> valve, bend, tee, fitting or other appurtenance. Joint restraint shall be RieberLok.

- Section 02660 – Water Mains. Add the following paragraphs immediately following Paragraph 2.E.6

  b. Two (2) tracer wires must be pulled over all directionally drilled watermains.

  c. Tracer wire access shall be provided at maximum 450' intervals, at both ends of each directional drill, and at the continuity test stations aside each fire hydrant.

- Section 02800 – Restoration. Add the following paragraph to the end of Paragraph 1.A

  Requirements of the MSHA Utility permit, obtained for this project, take precedence over the requirements specified herein. It is the responsibility of the Contractor to adhere to all permit requirements.

CITY OF ABERDEEN

Harford County, Maryland

DEPARTMENT OF PUBLIC WORKS

ABERDEEN WATERMAIN EXTENSION
CONTRACT NO. 21-12

PERMIT APPROVALS (36 sheets)

CITY OF ABERDEEN, MD
ABERDEEN WATERMAIN EXTENSION
HARFORD COUNTY, MD
EROSION AND SEDIMENTATION CONTROL PLAN
FEBRUARY 19, 2021
PROJECT NUMBER: 11201446

Permit No. 21-05

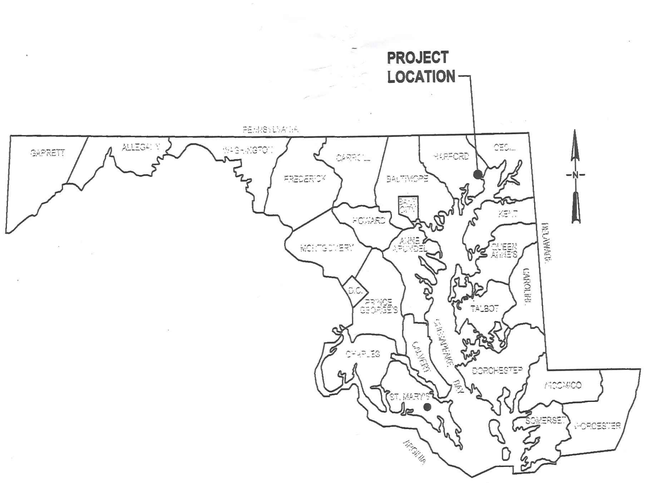

AREA MAP
NO SCALE

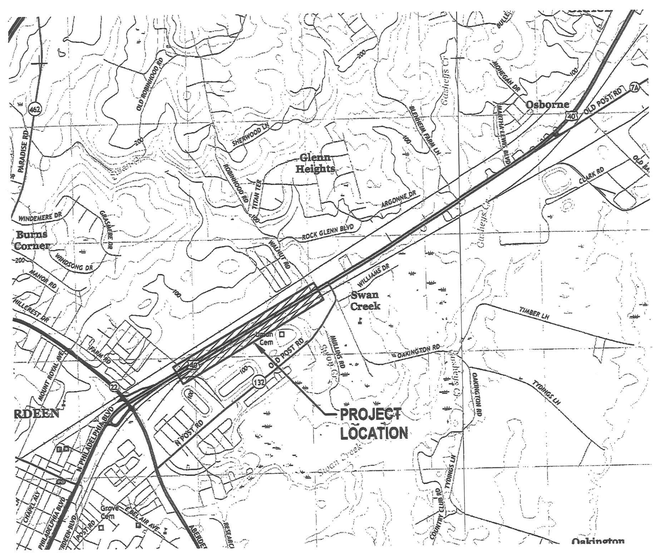

N

LOCATION MAP
SCALE: 1" = 2000'

USGS QUAD(S):
ABERDEEN, MD
HAVRE DE GRACE, MD

CITY OF ABERDEEN
BY _____ DATE _____
NO EXCEPTIONS TAKEN
REVISE AND RESUBMIT
NOT ACCEPTABLE FOR USE ON THIS PROJECT
RESUBMIT FOR RECORD
REVIEWED FOR CONFORMANCE WITH GENERAL CRITERIA CONCEPT AND GENERAL LAYOUT ONLY. NO RESPONSIBILITY IS ASSUMED FOR CORRECTNESS OF DIMENSIONS, QUANTITIES OR DETAILS. ACCEPTANCE OF A SPECIFIC ITEM DOES NOT INDICATE ACCEPTANCE OF ALL ENTIRE ASSEMBLY. NO CONTRACT REQUIREMENTS ARE WAIVED.

CALL "MISS UTILITY" 1-800-257-7777
FOR UTILITY LOCATIONS CALL AT LEAST 48 HOURS BEFORE BEGINNING CONSTRUCTION

EROSION AND SEDIMENT CONTROL PLAN #: _____

RECOMMENDED FOR APPROVAL:

_____
HARFORD COUNTY, SCD

TECHNICAL CONCURRANCE:

_____ 7.1.21
HARFORD SOIL CONSERVATION DISTRICT

APPROVED:

_____ 8-2-21
HARFORD SOIL CONSERVATION DISTRICT

Note: The purpose of this plan is to address sediment control for mass grading, road and utility construction only. Individual or collective home/ commercial building construction will require a separate sediment control plan. The developer/contractor shall comply with all stabilization requirements of this plan. Temporary buildings may be permitted with the approval of the Harford County DPW.

THIS PLAN HAS BEEN REVIEWED AND APPROVED FOR GENERAL CONFORMANCE WITH PROVISIONS OF THE CITY CODE. APPROVAL THEREOF DOES NOT RELIEVE THE CONTRACTOR OF ANY REQUIRED PROVISIONS OF THE CODE.

Kyle Jouste 2/25/2021
CITY OF ABERDEEN
DEPARTMENT OF PUBLIC WORKS

ENGINEER'S CERTIFICATION

I certify that this plan for erosion and sediment control and stormwater management represents a practical and workable plan based on my personal knowledge of the site conditions and that it was prepared in accordance with the 1994 Maryland Standard and Specifications for Soil Erosion and Sediment Control

Kevin Hartman February 23, 2021
Engineer Date

OWNER'S CERTIFICATION

I/we certify that all development and construction will be done according to this plan of development and plan for erosion and sediment control and that any responsible personnel involved in the construction project will have a certification of attendance at a Department of Natural Resources Approved Training Program for the control of sediment and erosion before beginning the project . I also authorize periodic onsite inspection by the Harford Soil Conservation District or their authorized agents, or as deemed necessary

Kyle Jouste 2/25/2021
Owner Date

No.	Issue	Drawn	Approved	Date
A	EROSION AND SEDIMENT CONTROL PLAN	RCC	KJH	02-19-2021

Bar is one inch on original size sheet
0 1"

Reuse of Documents
This document and the ideas and designs incorporated herein, as an instrument of professional service, is the property of GHD and shall not be reused in whole or in part for any other project without GHD's written authorization.
© 2021 GHD

STATE OF MARYLAND KEVIN J. HARTMAN 24951 PROFESSIONAL ENGINEER

GHD Inc.
1240 North Mountain Road
Harrisburg PA 17112 USA
T 1 717 541 0622 F 1 717 441 0161 W www.ghd.com

Drawn	R. CALHOUN	Designer	K. HARTMAN
Drafting Check		Design Check	
Project Manager	C. ANGLE	Date	FEBRUARY 19, 2021
This document shall not be used for construction unless signed and sealed for construction.		Scale	AS SHOWN

Client: CITY OF ABERDEEN, MD
Project: ABERDEEN WATERMAIN EXTENSION
Title: COVER SHEET
Project No. 11201446
Original Size: Arch D
Sheet No. G-001

Plot Date: 19 February 2021 - 3:38 PM Plotted By: Ryan Calhoun Filename: C:\Users\rcalhoun\Desktop\00-Aberdeen\ACAD 2018\Sheets\General\11201446-G001.dwg

STATE OF MARYLAND
DEPARTMENT OF THE ENVIRONMENT
WATER AND SCIENCE ADMINISTRATION
AUTHORIZATION TO PROCEED

AUTHORIZATION NUMBER: 21-NT-0307/202160430

EFFECTIVE DATE: June 7, 2021

EXPIRATION DATE: June 7, 2026

AUTHORIZED PERSON: City of Aberdeen
60 North Parke
Aberdeen, Maryland 21001
Attn: Mr. Parley Hess

IN ACCORDANCE WITH ENVIRONMENT ARTICLE §5-503(a) AND §5-906(b), ANNOTATED CODE OF MARYLAND (2007 REPLACEMENT VOLUME), COMAR 26.17.04 AND 26.23.01, AND 26.08.02 AND THE ATTACHED CONDITIONS OF AUTHORIZATIONS CITY OF ABERDEEN, (AUTHORIZED PERSON"), IS HEREBY AUTHORIZED BY THE WATER AND SCIENCE ADMINISTRATION ("ADMINISTRATION") TO CONDUCT A REGULATED ACTIVITY IN A NONTIDAL WETLAND, BUFFER, OR EXPANDED BUFFER, AND/OR TO CHANGE THE COURSE, CURRENT OR CROSS-SECTION OF WATERS OF THE STATE, IN ACCORDANCE WITH THE ATTACHED PLANS APPROVED BY THE ADMINISTRATION ON JUNE 7, 2021 ("APPROVED PLAN") AND PREPARED BY GHD, INC., AND INCORPORATED HEREIN, AS DESCRIBED BELOW:

Installation of 5,500 linear feet of a 12-inch water main along the Route 40 (Pulaski Highway) in an existing State Highway right-of-way from Beards Hill Road to Robin Hood Road, including also in an easement off the road near Swan Creek. The project also includes installation of a new 6-inch sewer force main by directional drilling under the Swan Creek. The water main will be installed by directional drilling method under the Swan Creek and its tributaries and an open-cut method in the 100-year floodplain. The proposed project will not impact any nontidal wetlands or nontidal wetland buffer, but it will temporarily impact 18,993 square feet of the 100-year floodplain of the Swan Creek and its tributaries. The project is located at Route 40 from its intersection with Beards Hill Road to the intersection with Robin Hood Road, in the City of Aberdeen, Harford County, Maryland.

MD Grid Coordinates N 206387 E 473743

Heather L. Nelson
Program Manager
Wetlands and Waterways Program

Attachments: Conditions of Authorization

cc: WSA Compliance Program w/ file
Principal Contact: Chad M. Angle – GHD, Inc.

1. **Validity:** Authorization is valid only for use by Authorized Person. Authorization may be transferred only with prior written approval of the Administration. In the event of transfer, transferee agrees to comply with all terms and conditions of Authorization.
2. **Initiation of Work, Modifications and Extension of Term**: Authorized Person shall initiate authorized activities with two (2) years of the Effective Date of this Authorization or the Authorization shall expire. Authorized Person may submit written requests to the Administration for (a) extension of the period for initiation of work, (b) modification of Authorization, including the Approved Plan, or, (c) not later than 45 days prior to Expiration Date, an extension of the term. Requests for modification shall be in accordance with applicable regulations and shall state reasons for changes, and shall indicate the impacts on nontidal wetlands, streams, and the floodplain, as applicable. The Administration may grant a request at its sole discretion.
3. **Responsibility and Compliance**: Authorized Person is fully responsible for all work performed and activities authorized by this Authorization shall be performed in compliance with this Authorization and Approved Plan. Authorized Person agrees that a copy of the Authorization and Approved Plan shall be kept at the construction site and provided to its employees, agents and contractors. A person (including Authorized Person, its employees, agents or contractors) who violates or fails to comply with the terms and conditions of this Authorization, Approved Plan or an administrative order may be subject to penalties in accordance with §5-514 and §5-911, Department of the Environment Article, Annotated Code of Maryland (2007 Replacement Volume).
4. **Failure to Comply**: If Authorized Person, its employees, agents or contractors fail to comply with this Authorization or Approved Plan, the Administration may, in its discretion, issue an administrative order requiring Authorized Person, its employees, agents and contractors to cease and desist any activities which violate this Authorization, or the Administration may take any other enforcement action available to it by law, including filing civil or criminal charges.
5. **Suspension or Revocation**: Authorization may be suspended or revoked by the Administration, after notice of opportunity for a hearing, if Authorized Person: (a) submits false or inaccurate information in Permit application or subsequently required submittals; (b) deviates from the Approved Plan, specifications, terms and conditions; (c) violates, or is about to violate terms and conditions of this Authorization; (d) violates, or is about to violate, any regulation promulgated pursuant to Title 5, Department of the Environment Article, Annotated Code of Maryland as amended; (e) fails to allow authorized representatives of the Administration to enter the site of authorized activities at any reasonable time to conduct inspections and evaluations; (f) fails to comply with the requirements of an administrative action or order issued by the Administration; or (g) does not have vested rights under this Authorization and new information, changes in site conditions, or amended regulatory requirements necessitate revocation or suspension.
6. **Other Approvals**: Authorization does not authorize any injury to private property, any invasion of rights, or any infringement of federal, State or local laws or regulations, nor does it obviate the need to obtain required authorizations or approvals from other State, federal or local agencies as required by law.
7. **Site Access:** Authorized Person shall allow authorized representatives of the Administration access to the site of authorized activities during normal business hours to conduct inspections and evaluations necessary to assure compliance with this Authorization. Authorized Person shall provide necessary assistance to effectively and safely conduct such inspections and evaluations.
8. **Inspection Notification:** Authorized Person shall notify the Administration's Compliance Program at least five (5) days before starting authorized activities and five (5) days after completion. For Allegany, Garrett, and Washington counties, Authorized Person shall call 301-689-1480. For Carroll, Frederick, Howard, Montgomery, and Prince George's counties, Authorized Person shall call 301-665-2850. For Baltimore City, Anne Arundel, Baltimore, Calvert, Charles, and St. Mary's, Authorized Person shall call 410-537-3510. For Caroline, Cecil, Dorchester, Harford, Kent, Queen Anne's, Somerset, Talbot, Wicomico and Worcester, Authorized Person shall call 410-901-4020. If Authorization is for a project that is part of a mining site, please contact the Land and Materials Administration's Mining Program at 410-537-3557 at least five (5) days before starting authorized activities and five (5) days after completion.
9. **Sediment Control:** Authorized Person shall obtain approval from the Harford County Soil Conservation District for a grading and sediment control plan, specifying soil erosion control measures. The approved grading and sediment control plan shall be included in the Approved Plan, and shall be available at the construction site.

10. **Best Management Practices During Construction:** Authorized Person, its employees, agents and contractors shall conduct authorized activities in a manner consistent with the Best Management Practices specified by the Administration.
11. **Disposal of Excess:** Unless otherwise shown on the Approved Plan, all excess fill, spoil material, debris, and construction material shall be disposed of outside of nontidal wetlands, nontidal wetlands buffers, and the 100-year floodplain, and in a location and manner which does not adversely impact surface or subsurface water flow into or out of nontidal wetlands.
12. **Temporary Staging Areas:** Temporary construction trailers or structures, staging areas and stockpiles shall not be located within nontidal wetlands, nontidal wetlands buffers, or the 100-year floodplain unless specifically included on the Approved Plan.
13. **Temporary Stream Access Crossings:** Temporary stream access crossings shall not be constructed or utilized unless shown on the Approved Plan. If temporary stream access crossings are determined necessary prior to initiation of work or at any time during construction, Authorized Person, its employees, agents or contractors shall submit a written request to the Administration and secure the necessary permits or approvals for such crossings before installation of the crossings. Temporary stream access crossings shall be removed and the disturbance stabilized prior to completion of authorized activity or within one (1) year of installation.
14. **Discharge:** Runoff or accumulated water containing sediment or other suspended materials shall not be discharged into waters of the State unless treated by an approved sediment control device or structure.
15. **Instream Construction Prohibition:**
    ☒ No instream construction is to occur under this Authorization;
    ☐ To protect important aquatic species, motor driven construction equipment shall not be allowed within stream channels unless on authorized ford crossings. Activities within stream channels are prohibited as determined by the classification of the stream (COMAR 26.08.02.08): The Swan Creek is a Use 1 waterway; in-stream work may not be conducted from March 1 through June 15, inclusive, of any year.
16. **Instream Blasting:** Authorized Person shall obtain prior written approval from the Administration before blasting or using explosives in the stream channel.
17. **Minimum Disturbance:** Any disturbance of stream banks, channel bottom, wetlands, and wetlands buffer authorized by this Authorization or Approved Plan shall be the minimum necessary to conduct permitted activities. All disturbed areas shall be stabilized vegetatively no later than seven (7) days after construction is completed or in accordance with the approved grading or sediment and erosion control plan.
18. **Restoration of Construction Site:** Authorized Person shall restore the construction site upon completion of authorized activities. Undercutting, meandering or degradation of the stream banks or channel bottom, any deposition of sediment or other materials, and any alteration of wetland vegetation, soils, or hydrology, resulting directly or indirectly from construction or authorized activities, shall be corrected by Authorized Person as directed by the Administration.

FEDERALLY MANDATED STATE AUTHORIZATIONS

The State of Maryland issued a Water Quality Certification to the U.S. Army Corps of Engineers for projects receiving federal authorization under the Maryland State Programmatic General Permit, Regional General Permit for Chesapeake Bay Total Maximum Daily Load (TMDL) Activities and non-suspended Nationwide Permits. In addition, as applicable, this Authorization constitutes the State's concurrence with the Applicant's certification that the activities authorized herein are consistent with the Maryland Coastal Zone Management Program, as required by Section 307 of the Coastal Zone Management Act of 1972, as amended. Activities in the following counties are not subject to the Maryland Coastal Zone Management requirement: Allegany, Carroll, Frederick, Garrett, Howard, Montgomery, and Washington.

U.S. ARMY CORPS OF ENGINEERS AUTHORIZATION

Authorization from the U.S. Army Corps of Engineers is not required as long as no regulated activities occur in the "Waters of the United States" including jurisdictional wetlands.

4/1/2021

CIty of Aberdeen
60 North Parke
Aberdeen, Maryland 21001

RE: Registration of Application Number: **MDRCM05KG**

Dear Parley Hess:

This letter confirms that you are now under the Department's Consent Order for discharges of stormwater associated with construction activity and that you have met the General Permit eligibility criteria and declared your intention to operate in accordance with the terms of 14-GP for discharges into: **Swan Creek (02130706)**

In signing the Declaration of Intent (DOI), the eNOI, providing Certification of an approved Erosion and Sediment Control (E&SC) plan and paying the permit fee, you have certified your agreement to comply with the terms of the permit for: **Aberdeen Watermain Extension**

Issued to **CIty of Aberdeen**

For **1.40 acres**

At property located at **Pulaski Highway**
Aberdeen, Maryland 21001

The Consent Order approval is identified by the Number **MDRCM05KG**. This coverage will continue until the deadline for new registrations required under a new general permit, the date you obtain coverage under an individual permit or general permit, or the date the Consent Order is terminated, whichever occurs first.
You should print the full permit text by going to MDE's website or from this link "mdewwp.page.link/CGP". You must become thoroughly familiar with the content of the permit and post a copy onsite. A summary of the permit requirements and provision are provided below:

In addition to stormwater associated with construction activity, Per Part III.A.4 of the permit, non-stormwater discharges from: dewatering from construction excavations, which must be managed by controls in accordance with the 2011 Standards and Specifications for Soil Erosion and Sediment Control (ES&C); fire fighting activities; air conditioning condensate; uncontaminated spring water; and foundation or footing drains where flows are not causing an erosive condition or contaminated with process materials such as solvents are permissible. Any discharges not covered by the Consent Order may require additional permit coverage (Part III.A.3).

The coverage requirements include:

- (Part III.D) Training requirements of all site personnel to understand aspects of permit and plan compliance relevant to their specific duties.
- (Part IV.A) Effluent Limitations, including selecting, installing, implementing and maintaining control measures (i.e., BMPs, controls, practices, etc.) at the construction site that minimize pollutants in the discharge, as well as requirements to modify controls or ceasing those discharges as required.
- (Part IV.B) Prevention of the discharge of sediment to surface waters, or conveyance systems leading to surface waters, including required corrective actions and on-site documentation.
- (Part IV.C.1) Mandatory inspection and frequency requirements.
- (Part IV.C.2) Requirements for posting information regarding this registration.
- (Part IV.C.3) Onsite record maintenance, including that the approved E&SC plan, the approved stormwater management plan, a copy of the general permit, the eNOI and a copy of this registration letter.
- (Part IV.C.3.b) Written report requirements including use of the form as provided by MDE(available on MDE's website "mdewwp.page.link/CGP" as a fillable Microsoft Word from and as an Adobe Acrobat file.
- (Part IV.D) Upon request, reporting requirements that may apply to you.

Remember to contact the compliance program to schedule a preconstruction meeting 2 weeks prior to starting construction. If the current E&SC plan approval covers only part of the entire site, be advised that this registration does not cover discharges from the other portions for the site until the appropriate E&SC approval authority approves the E&SC plan for those portions. The responsible party is required to submit any Modifications to this coverage, Transfers of Authorization, or Notices of Termination via the ePermits portal. If your contact information changes, update it through the ePermits portal.

If you have any questions, please call the administrative team for the General Permit at (410) 537-3019.

Sincerely,

Paul Hlavinka

Industrial and General Permits Division

Wastewater Permits Program

CONSENT ORDER

To Comply With The Terms and Conditions of the
General Permit for Stormwater Associated with Construction Activity 14GP

The Maryland Department of the Environment ("Department") has the powers, duties, and responsibilities vested in it pursuant to Sections 1-301 and 9-301 through 9-344, inclusive, of the Environment Article of the Annotated Code of Maryland, to implement and enforce the environmental laws of the State, including protection of the waters of the State;

Pursuant to Section 9-322 of the Environment Article, a person may not discharge any pollutant, including stormwater associated with construction activity, to waters of the State without a permit;

Pursuant to Section 9-335 of the Environment Article, the Department may issue an order to take corrective action to any person who has violated Title 9, subtitle 3 of the Environment Article, any rule or regulation adopted under Title 9, subtitle 3, or any order or permit issued under Title 9, subtitle 3;

A person who violates any provision of Title 9, subtitle 3 of the Environment Article or any rule, regulation, order, or permit adopted or issued by the Department under Title 9, subtitle 3 may be subject to potential civil and administrative penalties pursuant to Section 9-342, including for engaging in construction or land disturbing activities without a discharge permit;

In recognition that the General Permit for Stormwater Associated with Construction Activity (General NPDES Permit Number MDRC; State Discharge Permit Number 14GP) ("14GP") is beyond its five-year term, and in recognition that NPDES permits have a maximum duration of five years, the Department is no longer issuing new registrations under the expired permit 14GP. Proposed new discharges of stormwater associated with construction activity will not be allowed to obtain general permit coverage until a new permit is issued; and

Any person that has signed a Declaration of Intent (a "Declarant"), acknowledging the intent to seek permit coverage for all new and existing stormwater discharges that are composed in whole or in part of discharges associated with construction activity [as defined by 40 Code of Federal Regulations (40 CFR), Section 122.26 (b)(14)(x) and Section 122.26(b)(15)(i); see Part IX.3 for further definition of "construction activity"] under a new general permit once final and effective, voluntarily consents to the Department entering this Order. As described in the Declaration of Intent, the Declarant also voluntarily consents to abide by the terms and conditions of the expired 14GP until a new general permit is final

and effective or the Declarant is issued an individual discharge permit, whichever comes first.

ORDER

THEREFORE, pursuant to Sections 1-301 and 9-301 through 9-344, inclusive, of the Environment Article, the Department, hereby ORDERS that each Declarant shall, after receipt from the Department of documentation of approval of the NOI, comply with all terms and conditions of 14GP.

At any time at the discretion of the Department or the U.S. Environmental Protection Agency, or if there is evidence indicating that stormwater discharges authorized by this Order cause, have the reasonable potential to cause or contribute to an excursion above any applicable water quality standard, the Department may withdraw or revoke this Order and require any Declarant to obtain an individual permit or alternative general permit coverage. Alternatively, the Department may modify this Order to include different limitations and requirements, in accordance with the procedures contained in COMAR 26.08.04.10 and 40 C.F.R. §§ 122.62, 122.63, 122.64 and 124.5.

This Order is not intended to be nor shall it be construed to be a permit or an authorization for permit coverage. Compliance by a Declarant with the terms of this Order shall not relieve the Declarant of its obligation to comply with any other applicable local, state, or federal laws and regulations.

Nothing in this Order shall be construed to limit any authority of the Department to issue any order or to take any action it deems necessary to protect public health or the environment, or to limit any authority the Department now has or may hereafter be delegated.

The Department reserves the right to withdraw or revoke this Order at any time. Unless otherwise withdrawn or revoked, this Order shall remain in full force and effect for each Declarant until the deadline for new registrations required under a new general permit, or the date the Declarant obtains coverage under an individual permit or alternative general permit, whichever occurs first.

This Order will be effective for each Declarant upon approval of the NOI by the Department.

STATE OF MARYLAND,
DEPARTMENT OF THE ENVIRONMENT

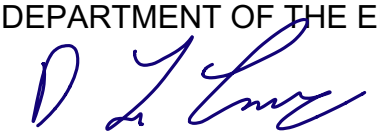

Date May 18, 2020

D. Lee Currey, Director
Water and Science Administration

THE MARYLAND DEPARTMENT OF TRANSPORTATION
STATE HIGHWAY ADMINISTRATION (MDOT SHA)

320 West Warren Road
Hunt Valley, Maryland 21030

Utility Permit

Permit Number: SHA-4-HA-0413-21

U.C. Ref or Job ID#: 11201446
Project Number:

Route No.: US 40
Limits : BEARDS HILL RD - MU 157 to MARTHA LEWIS BLVD - MU 742

Route Name (optional):
Mile Point : 13.950, 15.985

Issue Date : 7/8/2021

Expiration Date : 7/8/2022

So far as the MDOT State Highway Administration has the right and power to grant same, permission is hereby given to:

Permittee :
City of Aberdeen
60 North Parke Street
P.O. Box 70
Aberdeen, MD 21001

Attention :
Parley Hess
Phone#: (410) 297-4233
Email: phess@aberdeenmd.gov

Description of Work:
Install approximately 4,168 LF of 12" ductile iron watermain via open cut trench and 397 LF of 16" HDPE watermain via directional drill along US 40. The project will extend from Aberdeen's existing watermain distribution system heading east towards the City of Havre De Grace.

The following Special Conditions apply to this permit.

✓ Cold Mix Asphalt is PROHIBITED unless approved by MDOT SHA Utility Inspector. Only approved cold patch materials (CPM) identified on the MDOT/SHA List of Qualified Products is approved for use on Maryland State roadways. CPM's are only to be utilized as a temporary repair until full roadway restoration can be achieved.

✓ All facilities must be placed in accordance with current MDOT/SHA's "Accessibility Policy & Guidelines for Pedestrian Facilities Along State Highways".

✓ Pavement section must be patched using 19 mm PG64-22 base course HMA and (2") inches surface course 12.5mm PG64-22 HMA or as directed by MDOT/SHA Utility Inspector.

✓ An approved MDOT/SHA Traffic Control Permit shall be required prior to commencement of work.

- ✓ Permittee must communicate with the MDOT/SHA Utility Inspector one (1) week prior to the commencement of work being executed under this permit to discuss Maintenance of Traffic.

- ✓ All excavation outside of paved section shall be backfilled using suitable material as stated in the MDOT/SHA Specification Book (current revision) or approved by MDOT/SHA Utility Inspector.

- ✓ Steel Plates - All excavation in MDOT/SHA State Right-of-Way shall be backfilled or plated daily. All steel plates shall be recessed, pegged on all four (4) corners, properly shimmed/wedged, and filled around the edges to provide smooth transition. If more than one plate is utilized adjacent to each other, they shall be supported from the underside and tack welded to prevent flexing and shifting. All steel plates shall have identification. Inspections of steel plates must occur twice daily using approved MDOT/SHA Inspection Report. Any steel plate placed between December 1st and March 30th, shall have pre-approval from MDOT/SHA Utility Inspector and paving restoration plan/schedule must be identified.

- ✓ ROADWAY RESTORATION: All backfill must be compacted and tested. Compaction reports must be provided to SHA (trenches of a 1000’ or longer). Roadway repair may require a (2") inch grind and overlay a minimum of (20') feet (max. 250') feet on each side of excavation as directed by MDOT/SHA Utility Inspector. If permanent patch is not compatible to existing roadway, patch will be grinded (2") inches in depth and (20') feet on each side of patch, the entire width of the lane(s) and overlaid using an approved MDOT/SHA Hot Mix Asphalt (HMA) or as directed by MDOT/SHA Utilities Inspector. Any temporary roadway patch placed between October 30th and April 15th must consist of at least (6") inches HMA and monitored weekly by Permittee until permanent repair is completed. All roadway patches MUST have spray painted identification.

- ✓ Trench repair less than six (6’) feet in width will require a two (2') foot cut back in accordance with MDOT/SHA Standard 578.01 using an approved dry/fresh backfill material as specified in the MDOT/SHA Specification Book or per the MDOT/SHA Utility Inspector.

Notifications:

a. Permittee must notify **JOHN VANANZO**, the MDOT State Highway Administration **District Utility Engineer**, at **(410) 229-2341**, 48 hours prior to commencement of any activities related to this permit.

b. The permittee will designate the Traffic Manager for this permit and a 24 hour emergency number at the pre-construction meeting.

c. All work for this permit shall be in conformance with the above referenced documentation supplied by the utility company.

THIS PERMIT IS ISSUED WITH THE REQUIREMENT THAT IT WILL BE ENFORCED BY THE GENERAL PROVISIONS, SPECIAL PROVISIONS, AND PERMIT REGULATIONS AS OUTLINED IN THE FULL LENGTH SHA MASTER UTILITY PROVISIONS WHICH MUST BE FOUND ON THE JOB SITE **AT ALL TIMES.**

A COPY OF THIS PERMIT MUST ALSO BE FOUND ON THE JOB SITE **AT ALL TIMES.**

Brian O'Tenda **FOR**

By: _____
WENDELYN WOLCOTT

District Engineer
MDOT State Highway Administration

Lane Closure Permit / Schedule Summary

Date Printed	7/13/2021	District 4	
Date Submitted	7/12/2021		
Tracking Number	D4-U-HA-2021-1361		
Contract Number	SHA-4-HA-0413-21		
Type of Work	Utility		
Reason	WATER MAIN INSTALLATION		
Route and Exit Details	US-40 EAST/WEST FROM (MU-157) BEARDS HILL RD TO (CO-394) ROBIN HOOD RD		
County	Harford County		
Route	US-40		
Starting Point	BEARDS HILL RD		
Ending Point	ROBIN HOOD RD		

Contact Details

Contact Person	BILL MARKETTI		
Address	MD		
Office	SHA DISTRICT 4		
Email	Bmarketti@sha.state.md.us	Cell Phone	443-790-4214

Permittee Office Contact Details

Permittee Contact Person	PARLEY HESS		
Address	MD		
Email	PHESS@ABERDEENMD.GOV	Cell Phone	443-617-0038

Lane Closure Description

Requested Date(s)	7/14/2021 - 12/31/2021
Closure Days	Mon Tue Wed Thu Fri
Requested Time Period	09:00 - 15:00
Direction of Closure	EAST_WEST
Configuration Description	2 lanes each direction with shoulders

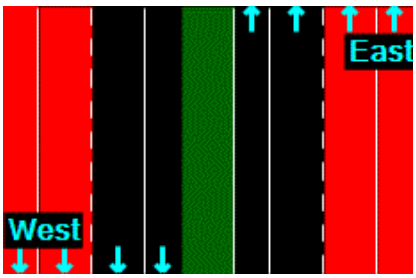

Closure Description	1 of 2 Westbound Traffic Lanes, right Shoulder, 1 of 2 Eastbound Traffic Lanes, right Shoulder permitted to be closed

Other Details

SHA Traffic Control Standard Number

MD 104.04-01	SHOULDER WORK/DIVIDED UNCON. GREATER THAN 40 MPH
MD 104.04-05	RIGHT LANE CLOSURE/DIVIDED UNCON. GREATER THAN 40 MPH

Remarks

7/12/2021 5:05:08 PM	Marketti	NOTICE: 1 The Permitee is required to call the call the Statewide Operations Center (SOC) every time they use the traffic control permit. They are also required to call when they are done for the day. The number for SOC is 410-582-5650. 2 The Traffic Control Manager shall be always available and be on site within 30 minutes during periods of active work in the work zone and be able to provide their certification card upon request from the State Utility Inspector. 3 The Traffic Control Permit must be on site. 4 The State Utility Inspector has the right to shut down the project if the utility company fails to follow the above requirements. 5 If the Utility Company continues to disregard the requirements noted above, the traffic control permit will be rescinded, and a meeting will be required before any work can continue on the project.

* Requests for lane closures must be made 48 HOURS prior to actual closure. (Weekend and Monday requests must be made by Thursday.)

* Permits will NOT be FAXed to Permittee. They will be given to the SHA or MDTA Contact Person.

* Permittee must coordinate with the Project Engineer, if working within Construction Work Zone Limits, in order to receive permission to work in that area.

* Permittee is responsible for implementation of all traffic control devices which must be in compliance with noted traffic control standard and the MUTCD

* This permit is subject to revocation at the discretion of the SHA or MDTA.

* Permittee must have a copy of the approved permit at the work site

* Prior to the actual closure and re-opening of the travel lanes, the field contact MUST notify the Statewide Operations Center or local Traffic Operations Center: SOC: 410-582-5650 or 1-800-543-2515 AOC: 410-537-1234 AOC North: 410-537-5601 AOC South: 410-537-6615

District Approval: Handy Phyall Jr. (410-229-2391) Date: 7/12/2021

FACILITY ENCROACHMENT AGREEMENT

THIS AGREEMENT, Made and effective as of March 16, 2021, by and between CSX TRANSPORTATION, INC., a Virginia corporation, whose mailing address is 500 Water Street, Jacksonville, Florida 32202, hereinafter called "Licensor," and CITY OF ABERDEEN, a municipal corporation, political subdivision or state agency, under the laws of the State of Maryland, whose mailing address is 60 N Parke Street, Aberdeen, Maryland 21001, hereinafter called "Licensee," WITNESSETH:

WHEREAS, Licensee desires to construct (unless previously constructed and designated as existing herein), use and maintain the below described facility(ies), hereinafter called "Facilities," over, under or across property owned or controlled by Licensor, at the below described location(s):

1. One (1) twelve inch (12") diameter sub-grade pipeline crossing, solely for the conveyance of potable water, located at or near Aberdeen, Harford County, Maryland, Baltimore Division, Philadelphia Subdivision, Milepost BAK-62.49, Latitude N39:31:07., Longitude W76:09:13.;

hereinafter, called the "Encroachment," as shown on print(s) labeled Exhibit "A," attached hereto and made a part hereof;

NOW, THEREFORE, in consideration of the mutual covenants, conditions, terms and agreements herein contained, the parties hereto agree and covenant as follows:

1. LICENSE:

1.1 Subject to Article 17, Licensor, insofar as it has the legal right, power and authority to do so, and its present title permits, and subject to:

(A) Licensor's present and future right to occupy, possess and use its property within the area of the Encroachment for any and all purposes, including but not limited to Licensor's track(s) structure(s), power lines, communication, signal or other wires, train control system, cellular or data towers, or electrical or electronic apparatus, or any appurtenances thereto ("Licensor's Facilities") and any other facilities as now exist or which may in the future be located in,upon, over, under or across the property;

(B) All encumbrances, conditions, covenants, easements, and limitations applicable to Licensor's title to or rights in the subject property; and

(C) Compliance by Licensee and its agent or contractor ("Licensee's Contractor") with the terms and conditions herein contained;

does hereby license and permit Licensee to construct, maintain, repair, renew, operate, use, alter or change the Facilities at the Encroachment above for the term herein stated, and to remove same upon termination.

1.2 The term Facilities, as used herein, shall include only those structures and ancillary facilities devoted exclusively to the transmission usage above within the Encroachment, and as shown on attached Exhibit A.

1.3 No additional structures or other facilities shall be placed, allowed, or maintained by Licensee in, upon or on the Encroachment except upon prior separate written consent of Licensor.

1.4 The term Licensor Facilities, as used herein shall include Licensor's track(s) structures(s), power lines, communication, signal or other wires, train control system, cellular or data towers, or electrical or electronic apparatus other property, or any appurtenances thereto and any other facilities as now exist or which may in the future be located in, upon, over, under or across the property.

2. ENCROACHMENT FEE; TERM:

2.1 Licensee shall pay Licensor a one-time nonrefundable Encroachment Fee of FIVE HUNDRED AND 00/100 U.S. DOLLARS ($500.00) upon execution of this Agreement. Licensee agrees that the Encroachment Fee applies only to the original Licensee under this Agreement. In the event of a successor (by merger, consolidation, reorganization and/or assignment) or if the original Licensee changes its name, then Licensee shall be subject to payment of Licensor's current administrative and document preparation fees for the cost incurred by Licensor in preparing and maintaining this Agreement on a current basis.

2.2 However, Licensee assumes sole responsibility for, and shall pay directly (or reimburse Licensor), any additional annual taxes and/or periodic assessments levied against Licensor or Licensor's property solely on account of said Facilities or Encroachment.

2.3 This Agreement shall terminate as herein provided, but shall also terminate upon: (a) Licensee's cessation of use of the Facilities or Encroachment for the purpose(s) above; (b) removal of the Facilities; (c) subsequent mutual consent; and/or (d) failure of Licensee to complete installation within five (5) years from the effective date of this Agreement.

2.4 In further consideration for the license or right hereby granted, Licensee hereby agrees that Licensor shall not be charged or assessed, directly or indirectly, with any part of the cost of the installation of said Facilities and appurtenances, and/or maintenance thereof, or for any public works project of which said Facilities is a part. Licensee agrees it shall not assess Licensor any stormwater or drainage fee associated with such Facilities. Furthermore, Licensee shall be responsible for any stormwater or drainage fees assessed by any County or State agency managing such systems.

3. CONSTRUCTION, MAINTENANCE AND REPAIRS:

3.1 Licensee shall construct, maintain, relocate, repair, renew, alter, and/or remove the Facilities, in a prudent, workmanlike manner, using quality materials and complying with any applicable standard(s) or regulation(s) of Licensor (CSXT Specifications), or Licensee's

particular industry, National Electrical Safety Code, or any governmental or regulatory body having jurisdiction over the Encroachment.

3.2 Location and construction of Facilities shall be made strictly in accordance with design(s) and specifications furnished to and approved by Licensor and of material(s) and size(s) appropriate for the purpose(s) above recited.

3.3 All of Licensee's work, and exercise of rights hereunder, shall be undertaken at time(s) satisfactory to Licensor, and so as to eliminate or minimize any impact on or interference with the safe use and operation of Licensor's property and appurtenances thereto.

3.4 In the installation, maintenance, repair and/or removal of said Facilities, Licensee shall not use explosives on or adjacent to Licensor's property of any type or perform or cause any blasting without the separate express written consent of Licensor. As a condition to such consent, a representative will be assigned by Licensor to monitor blasting, and Licensee shall reimburse Licensor for the entire cost and/or expense of furnishing said monitor.

3.5 Any repairs or maintenance to the Facilities, whether resulting from acts of Licensee, or natural or weather events, which are necessary to protect or facilitate Licensor's use of its property, shall be made by Licensee promptly, but in no event later than thirty (30) days after Licensee has notice as to the need for such repairs or maintenance.

3.6 Licensor, in order to protect or safeguard its property, rail operations, equipment and/or employees from damage or injury, may request immediate repair or renewal of the Facilities, and if the same is not performed, may make or contract to make such repairs or renewals, at the sole risk, cost and expense of Licensee.

3.7 Neither the failure of Licensor to object to any work done, material used, or method of construction or maintenance of said Encroachment, nor any approval given or supervision exercised by Licensor, shall be construed as an admission of liability or responsibility by Licensor, or as a waiver by Licensor of any of the obligations, liability and/or responsibility of Licensee under this Agreement.

3.8 All work on the Encroachment shall be conducted in accordance with Licensor's safety rules and regulations.

3.9 Licensee hereby agrees to reimburse Licensor any loss, cost or expense (including losses resulting from train delays and/or inability to meet train schedules) arising from any failure of Licensee to make repairs or conduct maintenance as required by Section 3.5 above or from improper or incomplete repairs or maintenance to the Facilities or Encroachment.

3.10 In the event it becomes necessary for the Licensee to deviate from the approved Exhibit, Licensee shall seek prior approval from Licensor, or when applicable, an official field representative of Licensor permitted to approve changes, authorizing the necessary field changes and Licensee shall provide Licensor with complete As-Built Drawings of the

completed work. As-Built Drawings shall be submitted to Licensor in either electronic or hard copy form upon the substantial completion of the project and upon Licensor's request.

3.11 In the event of large scale maintenance/construction work to railroad bridges Licensee is required to protect power lines with insulated covers or comparable safety devices at their costs during construction/maintenance for safety of railroad employees.

4. PERMITS, LICENSES:

4.1 Before any work hereunder is performed, or before use of the Encroachment for the contracted purpose, Licensee, at its sole cost and expense, shall obtain all necessary permit(s) (including but not limited to zoning, building, construction, health, safety or environmental matters), letter(s) or certificate(s) of approval. Licensee expressly agrees and warrants that it shall conform and limit its activities to the terms of such permit(s), approval(s) and authorization(s), and shall comply with all applicable ordinances, rules, regulations, requirements and laws of any governmental authority (State, Federal or Local) having jurisdiction over Licensee's activities, including the location, contact, excavation and protection regulations of the Occupational Safety and Health Act (OSHA) (29 CFR 1926.651(b)), et al., and State "One Call" - "Call Before You Dig" requirements.

4.2 Licensee assumes sole responsibility for failure to obtain such permit(s) or approval(s), for any violations thereof, or for costs or expenses of compliance or remedy.

5. MARKING AND SUPPORT:

5.1 With respect to any subsurface installation or maintenance upon Licensor's property, Licensee, at its sole cost and expense, shall:

(A) support track(s) and roadbed in a manner satisfactory to Licensor;

(B) backfill with satisfactory material and thoroughly tamp all trenches to prevent settling of surface of land and roadbed of Licensor; and

(C) either remove any surplus earth or material from Licensor's property or cause said surplus earth or material to be placed and distributed at location(s) and in such manner Licensor may approve.

5.2 After construction or maintenance of the Facilities, Licensee shall:

(A) Restore any track(s), roadbed and other disturbed property; and

(B) Erect, maintain and periodically verify the accuracy of aboveground markers, in a form approved by Licensor, indicating the location, depth and ownership of any underground Facilities or related facilities.

5.3 Licensee shall be solely responsible for any subsidence or failure of lateral or subjacent support in the Encroachment area for a period of three (3) years after completion of installation.

6. TRACK CHANGES:

6.1 In the event that rail operations and/or track maintenance result in changes in grade or alignment of, additions to, or relocation of track(s) or other facilities, or in the event future use of Licensor's rail corridor or property necessitate any change of location, height or depth in the Facilities or Encroachment, Licensee, at its sole cost and expense and within thirty (30) days after notice in writing from Licensor, shall make changes in the Facilities or Encroachment to accommodate such track(s) or operations.

6.2 If Licensee fails to do so, Licensor may make or contract to make such changes at Licensee's cost.

7. FACILITY CHANGES:

7.1 Licensee shall periodically monitor and verify the depth or height of the Facilities or Encroachment in relation to the existing tracks and facilities, and shall relocate the Facilities or change the Encroachment, at Licensee's expense, should such relocation or change be necessary to comply with the minimum clearance requirements of Licensor.

7.2 If Licensee undertakes to revise, renew, relocate or change in any manner whatsoever all or any part of the Facilities (including any change in voltage or gauge of wire or any change in circumference, diameter or radius of pipe or change in materials transmitted in and through said pipe), or is required by any public agency or court order to do so, plans therefor shall be submitted to Licensor for approval before such change. After approval, the terms and conditions of this Agreement shall apply thereto.

8. INTERFERENCE WITH RAIL FACILITIES:

8.1 Although the Facilities/Encroachment herein permitted may not presently interfere with Licensor's Facilities, in the event that the operation, existence or maintenance of said Facilities, in the sole judgment of Licensor, causes: (a) interference (including, but not limited to, physical or interference from an electromagnetic induction, or interference from stray or other currents) with Licensor's power lines, communication, signal or other wires, train control system, or electrical or electronic apparatus; or (b) interference in any manner, with the operation, maintenance or use of Licensor's Facilities; then and in either event, Licensee, upon receipt of written notice from Licensor of any such interference, and at Licensee's sole risk, cost and expense, shall promptly make such changes in its Facilities or installation, as may be required in the reasonable judgment of the Licensor to eliminate all such interference. Upon Licensee's failure to remedy or change, Licensor may do so or contract to do so at Licensee's sole cost.

8.2 Without assuming any duty hereunder to inspect the Facilities, Licensor hereby reserves the right to inspect same and to require Licensee to undertake repairs, maintenance or adjustments to the Facilities, which Licensee hereby agrees to make promptly, at Licensee's sole cost and expense.

9. RISK, LIABILITY, INDEMNITY:

With respect to the relative risk and liabilities of the parties, it is hereby agreed that:

9.1 To the fullest extent permitted by State law (constitutional or statutory, as amended), Licensee hereby agrees to, defend, indemnify, and hold Licensor harmless from and against any and all liability, loss, claim, suit, damage, charge or expense which Licensor may suffer, sustain, incur or in any way be subjected to, on account of death of or injury to any person whomsoever (including officers, agents, employees or invitees of Licensor), and for damage to or loss of or destruction of any property whatsoever, arising out of, resulting from, or in any way connected with the construction, repair, maintenance, replacement, presence, existence, operations, use or removal of the Facilities or any structure in connection therewith, or restoration of premises of Licensor to good order or condition after removal, EXCEPT when proven to have been caused solely by the willful misconduct or gross negligence of Licensor. HOWEVER, to the fullest extent permitted by State law, during any period of actual construction, repair, maintenance, replacement or removal of the Facilities, wherein agents, equipment or personnel of Licensee are on the railroad rail corridor, Licensee's liability hereunder shall be absolute, irrespective of any joint, sole or contributory fault or negligence of Licensor.

9.2 Licensee's Contractor shall hereby agree to, defend, indemnify, and hold Licensor harmless from and against any and all liability, loss, claim, suit, damage, charge or expense which Licensor may suffer, sustain, incur or in any way be subjected to, on account of death of or injury to any person whomsoever (including officers, agents, employees or invitees of Licensor), and for damage to or loss of or destruction of any property whosoever, arising out of resulting from, or in any way connected with the construction, repair, maintenance, replacement, presence, existence, operations, use or removal of the Facilities or any structure in connection therewith, or restoration of premises of Licensor to good order or condition after removal, EXCEPT when proven to have been caused solely by the willful misconduct or gross negligence of Licensor. HOWEVER, to the fullest extent permitted by State law, during any period of actual construction, repair, maintenance, replacement or removal of the Facilities, wherein agents, equipment or personnel of Licensee are on the railroad rail corridor, Licensee's liability hereunder shall be absolute, irrespective of any joint, sole or contributory fault or negligence of Licensor.

9.3 Use of Licensor's rail corridor involves certain risks of loss or damage as a result of the rail operations. Notwithstanding Section 9.1, Licensee expressly assumes all risk of loss and damage to Licensee's Property or the Facilities in, on, over or under the Encroachment, including loss of or any interference with use or service thereof, regardless of cause, including electrical field creation, fire or derailment resulting from rail operations. For this Section, the term "Licensee's Property" shall include property of third parties situated or placed upon

Licensor's rail corridor by Licensee or by such third parties at request of or for benefit of Licensee.

9.4 To the fullest extent permitted by State law, as above, Licensee assumes all responsibility for, and agrees to defend, indemnify and hold Licensor harmless from: (a) all claims, costs and expenses, including reasonable attorneys' fees, as a consequence of any sudden or nonsudden pollution of air, water, land and/or ground water on or off the Encroachment area, arising from or in connection with the use of this Encroachment or resulting from leaking, bursting, spilling, or any escape of the material transmitted in or through the Facilities; (b) any claim or liability arising under federal or state law dealing with either such sudden or nonsudden pollution of air, water, land and/or ground water arising therefrom or the remedy thereof; and (c) any subsidence or failure of lateral or subjacent support of the tracks arising from such Facilities leakage.

9.5 Notwithstanding Section 9.1, Licensee also expressly assumes all risk of loss which in any way may result from Licensee's failure to maintain either required clearances for any overhead Facilities or the required depth and encasement for any underground Facilities, whether or not such loss(es) result(s) in whole or part from Licensor's contributory negligence or joint fault.

9.6 Obligations of Licensee hereunder to release, indemnify and hold Licensor harmless shall also extend to companies and other legal entities that control, are controlled by, subsidiaries of, or are affiliated with Licensor, as well as any railroad that operates over the rail corridor on which the Encroachment is located, and the officers, employees and agents of each.

9.7 If a claim is made or action is brought against Licensor, and/or its operating lessee, for which Licensee may be responsible hereunder, in whole or in part, Licensee shall be notified to assume the handling or defense of such claim or action; but Licensor may participate in such handling or defense.

9.8 Notwithstanding anything contained in this Agreement, the limitation of liability contained in the state statutes, as amended from time to time, shall not limit Licensor's ability to collect under the insurance policies required to be maintained under this Agreement.

10. INSURANCE:

10.1 Prior to commencement of surveys, installation or occupation of premises pursuant to this Agreement, Licensee shall procure and shall maintain during the continuance of this Agreement, at its sole cost and expense, a policy of

(i) Statutory Worker's Compensation and Employers Liability Insurance with available limits of not less than ONE MILLION AND 00/100 U.S. DOLLARS ($1,000,000.00).

(ii) Commercial General Liability coverage (inclusive of contractual liability) with available limits of not less than FIVE MILLION AND 00/100 U.S. DOLLARS

($5,000,000.00)in combined single limits for bodily injury and property damage and covering the contractual liabilities assumed under this Agreement and naming Licensor, and/or its designee, as additional insured. The evidence of insurance coverage shall be endorsed to provide for thirty (30) days' notice to Licensor, or its designee, prior to cancellation or modification of any policy. Mail CGL certificate, along with agreement, to CSX Transportation, Inc., Speed Code J180, 500 Water Street, Jacksonville, FL 32202. On each successive year, send certificate to RenewalCOI@csx.com.

(iii) Business automobile liability insurance with available limits of not less than ONE MILLION AND 00/100 U.S. DOLLARS ($1,000,000.00) combined single limit for bodily injury and/or property damage per occurrence naming Licensor, and/or its designee, as additional insured.

(iv) The insurance policies must contain a waiver of subrogation against CSXT and its Affiliates, except where prohibited by law. All insurance companies must be A. M. Best rated A- and Class VII or better.

(v) Such other insurance as Licensor may reasonably require.

(vi) Licensee shall require its contractors to meet minimum insurance requirements above when performing work in relation to this agreement. Licensee will procure and review contractor's insurance certificates to confirm requirements are met. Licensor may request a copy of the insurance certificate.

10.2 If Licensee's Contractor's existing CGL policy(ies) do(es) not automatically cover Licensee's contractual liability during periods of survey, installation, maintenance and continued occupation, a specific endorsement adding such coverage shall be purchased by Licensee's Contractor. If said CGL policy is written on a "claims made" basis instead of a "per occurrence" basis, Licensee shall arrange for adequate time for reporting losses. Failure to do so shall be at Licensee's sole risk.

10.3 Licensor, or its designee, may at any time request evidence of insurance purchased by Licensee to comply with this Agreement. Failure of Licensee to comply with Licensor's request shall be considered a default by Licensee.

10.4 To the extent permitted by law and without waiver of the sovereign immunity of Licensee, securing such insurance shall not limit Licensee's liability under this Agreement, but shall be security therefor.

10.5 (A) In the event Licensee finds it necessary to perform construction or demolition operations within fifty feet (50') of any operated railroad track(s) or affecting any railroad bridge, trestle, tunnel, track(s), roadbed, overpass or underpass, Licensee shall: (a) notify Licensor; and (b) require Licensee's Contractor(s) performing such operations to procure and maintain during the period of construction or demolition operations, at no cost to Licensor,

i) Railroad Protective Liability (RPL) Insurance, naming Licensor, and/or its designee, as Named Insured, written on the current ISO/RIMA Form (ISO Form No. CG 00 35 04 13) with limits of FIVE MILLION AND 00/100 U.S. DOLLARS ($5,000,000.00) per occurrence for bodily injury and property damage, with at least TEN MILLION AND 00/100 U.S. DOLLARS ($10,000,000.00) aggregate limit per annual policy period. The original of such RPL policy shall be sent to and approved by Licensor prior to commencement of such construction or demolition. Licensor reserves the right to demand higher limits.

OR

ii) The CGL policy shall include endorsement ISO CG 24 17 and the Auto Liability Policy shall include endorsement ISO CA 20 70 evidencing that coverage is provided for work within 50 feet of a railroad. If such endorsements are not included, RPL insurance must be provided.

(B) At Licensor's option, in lieu of purchasing RPL insurance or the 50 foot endorsements from an insurance company (but not CGL insurance), Licensee may pay Licensor, at Licensor's current rate at time of request, the cost of adding this Encroachment, or additional construction and/or demolition activities, to Licensor's Railroad Protective Liability (RPL) Policy for the period of actual construction. This coverage is offered at Licensor's discretion and may not be available under all circumstances.

10.6 Notwithstanding the provisions of Sections 10.1 and 10.2, Licensee, pursuant to State Statute(s), may self-insure or self-assume, in any amount(s), any contracted liability arising under this Agreement, under a funded program of self-insurance, which fund will respond to liability of Licensee imposed by and in accordance with the procedures established by law.

11. GRADE CROSSINGS; PROTECTION SERVICES:

11.1 Nothing herein contained shall be construed to permit Licensee or Licensee's contractor to move any vehicles or equipment over the track(s), except at public road crossing(s), without separate prior written approval of Licensor.

11.2 If Licensor deems it advisable, during any construction, maintenance, repair, renewal, alteration, change or removal of said Facilities, to place watchmen, flagmen, or field construction managers for protection of operations of Licensor or others on Licensor's rail corridor at the Encroachment, and to keep persons, equipment or materials away from the track(s), Licensor shall have the right to do so at the expense of Licensee, but Licensor shall not be liable for failure to do so.

12. LICENSOR'S COSTS:

12.1 Any additional or alternative costs or expenses incurred by Licensor to accommodate Licensee's continued use of Licensor's property as a result of track changes or changes to Licensor's Facilities shall also be paid by Licensee.

12.2 Licensor's expense for wages ("force account" charges) and materials for any work performed at the expense of Licensee pursuant hereto shall be paid by Licensee within thirty (30) days after receipt of Licensor's bill therefor. Licensor may, at its discretion, request an advance deposit for estimated Licensor costs and expenses.

12.3 Such expense shall include, but not be limited to, cost of railroad labor and supervision under "force account" rules, plus current applicable overhead percentages, the actual cost of materials, and insurance, freight and handling charges on all material used. Equipment rentals shall be in accordance with Licensor's applicable fixed rate. Licensor may, at its discretion, require advance deposits for estimated costs of such expenses and costs.

13. DEFAULT, BREACH, WAIVER:

13.1 The proper and complete performance of each covenant of this Agreement shall be deemed of the essence thereof, and in the event Licensee fails or refuses to fully and completely perform any of said covenants or remedy any breach within thirty (30) days after receiving written notice from Licensor to do so (or within forty-eight (48) hours in the event of notice of a railroad emergency), Licensor shall have the option of immediately revoking this Agreement and the privileges and powers hereby conferred, regardless of encroachment fee(s) having been paid in advance for any annual or other period. Upon such revocation, Licensee shall make removal in accordance with Article 14.

13.2 No waiver by Licensor of its rights as to any breach of covenant or condition herein contained shall be construed as a permanent waiver of such covenant or condition, or any subsequent breach thereof, unless such covenant or condition is permanently waived in writing by Licensor.

13.3 Neither the failure of Licensor to object to any work done, material used, or method of construction or maintenance of said Encroachment, nor any approval given or supervision exercised by Licensor, shall be construed as an admission of liability or responsibility by Licensor, or as a waiver by Licensor of any of the obligations, liability and/or responsibility of Licensee under this Agreement.

14. TERMINATION, REMOVAL:

14.1 All rights which Licensee may have hereunder shall cease upon the date of (a) termination, (b) revocation, or (c) subsequent agreement, or (d) Licensee's removal of the Facility from the Encroachment. However, neither termination nor revocation of this Agreement shall affect any claims and liabilities which have arisen or accrued hereunder, and which at the time of termination or revocation have not been satisfied; neither party, however, waiving any third party defenses or actions.

14.2 Within thirty (30) days after revocation or termination, Licensee, at its sole risk and expense, shall (a) remove the Facilities from the rail corridor of Licensor, unless the parties hereto agree otherwise, (b) restore the rail corridor of Licensor in a manner satisfactory to

Licensor, and (c) reimburse Licensor any loss, cost or expense of Licensor resulting from such removal.

15. NOTICE:

15.1 Licensee shall give Licensor at least thirty (30) days written notice before doing any work on Licensor's rail corridor, except that in cases of emergency shorter notice may be given. Licensee shall provide proper notification as follows:

a. For non-emergencies, Licensee shall submit online via the CSX Property Portal from Licensor's web site, via web link: https://propertyportal.csx.com/pub_ps_res/ps_res/jsf/public/index.faces

b. For emergencies, Licensee shall complete all of the steps outlined in Section 15.1 a. above, and shall also include detailed information of the emergency. Licensee shall also call and report details of the emergency to Licensor's Rail Operations Emergency Telephone Number: 1-800-232-0144. In the event Licensor needs to contact Licensee concerning an emergency involving Licensee's Facility(ies), the emergency phone number for Licensee is: 443-617-0038.

15.2 All other notices and communications concerning this Agreement shall be addressed to Licensee at the address above, and to Licensor at the address shown on Page 1, c/o CSXT Contract Management, J180; or at such other address as either party may designate in writing to the other.

15.3 Unless otherwise expressly stated herein, all such notices shall be in writing and sent via Certified or Registered Mail, Return Receipt Requested, or by courier, and shall be considered delivered upon: (a) actual receipt, or (b) date of refusal of such delivery.

16. ASSIGNMENT:

16.1 The rights herein conferred are the privileges of Licensee only, and Licensee shall obtain Licensor's prior written consent to any assignment of Licensee's interest herein; said consent shall not be unreasonably withheld.

16.2 Subject to Sections 2 and 16.1, this Agreement shall be binding upon and inure to the benefit of the parties hereto and their respective successors or assigns.

16.3 Licensee shall give Licensor written notice of any legal succession (by merger, consolidation, reorganization, etc.) or other change of legal existence or status of Licensee, with a copy of all documents attesting to such change or legal succession, within thirty (30) days thereof.

16.4 Licensor expressly reserves the right to assign this Agreement, in whole or in part, to any grantee, lessee, or vendee of Licensor's underlying property interests in the Encroachment, upon written notice thereof to Licensee.

16.5 In the event of any unauthorized sale, transfer, assignment, sublicense or encumbrance of this Agreement, or any of the rights and privileges hereunder, Licensor, at its option, may revoke this Agreement by giving Licensee or any such assignee written notice of such revocation; and Licensee shall reimburse Licensor for any loss, cost or expense Licensor may incur as a result of Licensee's failure to obtain said consent.

17. TITLE:

17.1 Licensee understands that Licensor occupies, uses and possesses lands, rights-of-way and rail corridors under all forms and qualities of ownership rights or facts, from full fee simple absolute to bare occupation. Accordingly, nothing in this Agreement shall act as or be deemed to act as any warranty, guaranty or representation of the quality of Licensor's title for any particular Encroachment or segment of Rail Corridor occupied, used or enjoyed in any manner by Licensee under any rights created in this Agreement. It is expressly understood that Licensor does not warrant title to any Rail Corridor and Licensee will accept the grants and privileges contained herein, subject to all lawful outstanding existing liens, mortgages and superior rights in and to the Rail Corridor, and all leases, licenses and easements or other interests previously granted to others therein.

17.2 The term "license," as used herein, shall mean with regard to any portion of the Rail Corridor which is owned by Licensor in fee simple absolute, or where the applicable law of the State where the Encroachment is located otherwise permits Licensor to make such grants to Licensee, a "permission to use" the Rail Corridor, with dominion and control over such portion of the Rail Corridor remaining with Licensor, and no interest in or exclusive right to possess being otherwise granted to Licensee. With regard to any other portion of Rail Corridor occupied, used or controlled by Licensor under any other facts or rights, Licensor merely waives its exclusive right to occupy the Rail Corridor and grants no other rights whatsoever under this Agreement, such waiver continuing only so long as Licensor continues its own occupation, use or control. Licensor does not warrant or guarantee that the license granted hereunder provides Licensee with all of the rights necessary to occupy any portion of the Rail Corridor. Licensee further acknowledges that it does not have the right to occupy any portion of the Rail Corridor held by Licensor in less than fee simple absolute without also receiving the consent of the owner(s) of the fee simple absolute estate. Further, Licensee shall not obtain, exercise or claim any interest in the Rail Corridor that would impair Licensor's existing rights therein.

17.3 Licensee agrees it shall not have nor shall it make, and hereby completely and absolutely waives its right to, any claim against Licensor for damages on account of any deficiencies in title to the Rail Corridor in the event of failure or insufficiency of Licensor's title to any portion thereof arising from Licensee's use or occupancy thereof.

17.4 Licensee agrees to fully and completely indemnify and defend all claims or litigation for slander of title, overburden of easement, or similar claims arising out of or based upon the Facilities placement, or the presence of the Facilities in, on or along any Encroachment(s), including claims for punitive or special damages.

17.5 Licensee shall not at any time own or claim any right, title or interest in or to Licensor's property occupied by the Encroachments, nor shall the exercise of this Agreement for any length of time give rise to any right, title or interest in Licensee to said property other than the license herein created.

17.6 Nothing in this Agreement shall be deemed to give, and Licensor hereby expressly waives, any claim of ownership in and to any part of the Facilities.

17.7 Licensee shall not create or permit any mortgage, pledge, security, interest, lien or encumbrances, including without limitation, tax liens and liens or encumbrances with respect to work performed or equipment furnished in connection with the construction, installation, repair, maintenance or operation of the Facilities in or on any portion of the Encroachment (collectively, "Liens or Encumbrances"), to be established or remain against the Encroachment or any portion thereof or any other Licensor property.

17.8 In the event that any property of Licensor becomes subject to such Liens or Encumbrances, Licensee agrees to pay, discharge or remove the same promptly upon Licensee's receipt of notice that such Liens or Encumbrances have been filed or docketed against the Encroachment or any other property of Licensor; however, Licensee reserves the right to challenge, at its sole expense, the validity and/or enforceability of any such Liens or Encumbrances.

18. GENERAL PROVISIONS:

18.1 This Agreement, and the attached specifications, contains the entire understanding between the parties hereto.

18.2 Neither this Agreement, any provision hereof, nor any agreement or provision included herein by reference, shall operate or be construed as being for the benefit of any third person.

18.3 Except as otherwise provided herein, or in any Rider attached hereto, neither the form of this Agreement, nor any language herein, shall be interpreted or construed in favor of or against either party hereto as the sole drafter thereof.

18.4 This Agreement is executed under current interpretation of applicable Federal, State, County, Municipal or other local statute, ordinance or law(s). However, each separate division (paragraph, clause, item, term, condition, covenant or agreement) herein shall have independent and severable status for the determination of legality, so that if any separate division is determined to be void or unenforceable for any reason, such determination shall have no effect upon the validity or enforceability of each other separate division, or any combination thereof.

18.5 This Agreement shall be construed and governed by the laws of the state in which the Facilities and Encroachment are located.

18.6 If any amount due pursuant to the terms of this Agreement is not paid by the due date, it will be subject to Licensor's standard late charge and will also accrue interest at eighteen percent (18%) per annum, unless limited by local law, and then at the highest rate so permitted.

18.7 Licensee agrees to reimburse Licensor for all reasonable costs (including attorney's fees) incurred by Licensor for collecting any amount due under the Agreement.

18.8 The provisions of this License are considered confidential and may not be disclosed to a third party without the consent of the other party(s), except: (a) as required by statute, regulation or court order, (b) to a parent, affiliate or subsidiary company, (c) to an auditing firm or legal counsel that are agreeable to the confidentiality provisions, or (d) to Lessees of Licensor's land and/or track who are affected by the terms and conditions of this Agreement and will maintain the confidentiality of this Agreement.

18.9 Within thirty (30) days of an overpayment in a cumulative total amount of One Hundred Dollars ($100.00) or more by Licensee to Licensor, Licensee shall notify Licensor in writing with documentation evidencing such overpayment. Licensor shall refund the actual amount of Licensee's overpayment within 120 days of Licensor's verification of such overpayment.

18.10 This Agreement may be executed in any number of counterparts, and such counterparts may be exchanged by electronic transmission. Upon execution by the parties hereto, each counterpart shall be deemed an original and together shall constitute one and the same instrument. A fully executed copy of this Agreement by electronic transmission shall be deemed to have the same legal effect as delivery of an original executed copy of this Agreement for all purposes.

19. CONTRACTOR'S ACCEPTANCE:

19.1 Licensee shall observe and abide by, and shall require Licensee's Contractors to observe and abide by the terms, conditions and provisions set forth in this Agreement. Prior to any commencement of work under this Agreement by Licensee's Contractor, Licensee shall require Licensee's Contractor to execute and deliver to Licensor the Contractor Acceptance form attached hereto as Schedule A to acknowledge Licensee's Contractor's agreement to observe and abide by terms and conditions of the Agreement.

[REMAINDER OF PAGE INTENTIONALLY LEFT BLANK]

IN WITNESS WHEREOF, the parties hereto have executed this Agreement in duplicate (each of which shall constitute an original) as of the effective date of this Agreement.

Witness for Licensor:

CSX TRANSPORTATION, INC.

By: _____

Print/Type Name: Catherine Adkins

Print/Type Title: Sr Mgr - Real Estate

Witness for Licensee:

CITY OF ABERDEEN

By: Kyle Torster

Who, by the execution hereof, affirms that he/she has the authority to do so and to bind the Licensee to the terms and conditions of this Agreement.

Print/Type Name: Kyle Torster

Print/Type Title: Director, PW

Tax ID No.: 52-6000957

52-6000957

Schedule "A"

CONTRACTOR'S ACCEPTANCE

This Amendment is and shall be a part of Agreement No. CSX930303, and is incorporated therein.

To and for the benefit of CSX TRANSPORTATION, Inc. (Licensor") and to induce Licensor to permit Contractor on or about Licensor's property for the purposed of performing work in accordance with the Agreement dated March 16, 2021, between Licensee and Licensor, Contractor hereby agrees to abide by and perform all applicable terms of the Agreement, including, but not limited to Sections 3, 9, 10 of the Agreement.

Witness for Licensor:

_____

CSX TRANSPORTATION INC.

By:_____

Print/Type Name:_____

Print/Type Title:_____

Witness for Licensee's Contractor

_____

_____
LICENSEE'S CONTRACTOR

By: _____
Who, by the execution hereof, affirms that he/she has the authority to do so and to bind the Licensee has the authority to do so and to bind the Licensee to the terms and conditions of this Agreement

NAME: _____

TITLE: _____

DATE: _____

CSX Transportation (CSX) General Notes (Bore and Jack):

1) CSX owns its right-of-way for the primary purpose of operating a railroad, and shall maintain unrestricted use of its property for current and future operations. In the event that relocation of facilities becomes necessary to accommodate the movement of rail traffic, Licensee, at its sole risk and expense, shall be required to relocate and/or remove facilities from the rail corridor of Licensor within a time frame mutually agreed.

2) CSX's consent applies to the design and construction of the utility located solely in the right-of-way owned by CSX and assures that CSX and AREMA Standard Specifications are met for tracks owned by others over which CSX operates. It is the utility Owner's (Applicant) responsibility to get permission from the property owner that is other than CSX to access and construct on their property.

3) Refer to the CSX's "Design & Construction Standard Specifications Pipeline Occupancies" revised June 5, 2018 (4.1.2 Bore and Jack (Steel Pipe) and "Design & Construction Standard Specifications Wireline Occupancies" revised December 16, 2016.

4) CSX's signal facilities and/or warning devices at proposed facility crossing, i.e. cantilevers, flashers, and gates are to be located prior to installation.

5) No entry or construction on CSX's railroad corridor is permitted until the utility encroachment review and approval process is completed, you are in receipt of a fully executed License agreement and you have obtained authority from the local Road Master.

6) Front of the pipe shall be provided with mechanical arrangements or devices that will positively prevent the auger from leading the pipe so that no unsupported excavation is ahead of the pipe.

7) Operation shall be progressed on a 24-hour basis without stoppage (except for adding lengths of pipe) until the leading edge of the pipe has reached the receiving pit.

8) In the event an obstruction is encountered, auger and cutting head arrangement shall be removable from within the pipe.

9) If bottom of the pit excavation(s) intersect the TREL, interlocking steel sheet piling, driven prior to excavation, must be used. Design plans and computations, sealed by a Licensed Professional Engineer, for steel sheet piles must be provided prior to construction for review and approval.

10) At locations where open cut is permitted on CSX's right-of-way and/or railroad corridor, contractor must comply with CSX's D&C Standard Specifications section 4.1.7 Open Cut. Please reference this guidance for instructions on restoring site.

11) Environmental protection plan for preventing/controlling pollution and habitat disruption that may occur to the environment during construction; together with an erosion and sediment control plan are to be submitted for approval.

12) Soil that cannot be used or disposed on CSX's right-of-way must be properly disposed at a CSX approved disposal facility.

13) Manholes shall not be located on CSX's property where possible. At locations where this is not practical, including longitudinal occupancies, manholes shall be precast concrete sections conforming to ASTM Designation C 478, "Specification for Precast Concrete."

14) Pipeline encroachment shall be prominently marked at both sides of the CSX's property lines by durable, weatherproof signs located over the centerline of the pipe in accordance with CSX's D&C Standard Specifications.

15) If required, a dewatering plan in accordance with CSX's D&C Standard Specifications will be submitted to the CSX representative for review and approval prior to any dewatering operations.

16) Blasting is not permitted on CSX's property.

17) Abandoned pipelines shall be removed or completely filled with cement grout, compacted sand, or other methods, as approved by CSX. Abandoned manholes and other structures shall be removed to a minimum depth of 2 feet below finished grade and completely filled with cement grout, compacted sand, or other methods as approved by CSX.

18) CSX does not grant or convey an easement for this installation.

19) The use of construction safety fencing is required when a CSX Flagman is not present. Distance of fencing from nearest rail to be determined by the CSX Roadmaster and shall be removed upon completion of the project.

20) After installation has been completed site and track(s) are required to be restored to a safe condition, with particular attention given to continuity of track(s) and surrounding surface(s) adjacent to track(s) and any other areas CSX employees may be exposed to during the performance of their duties.

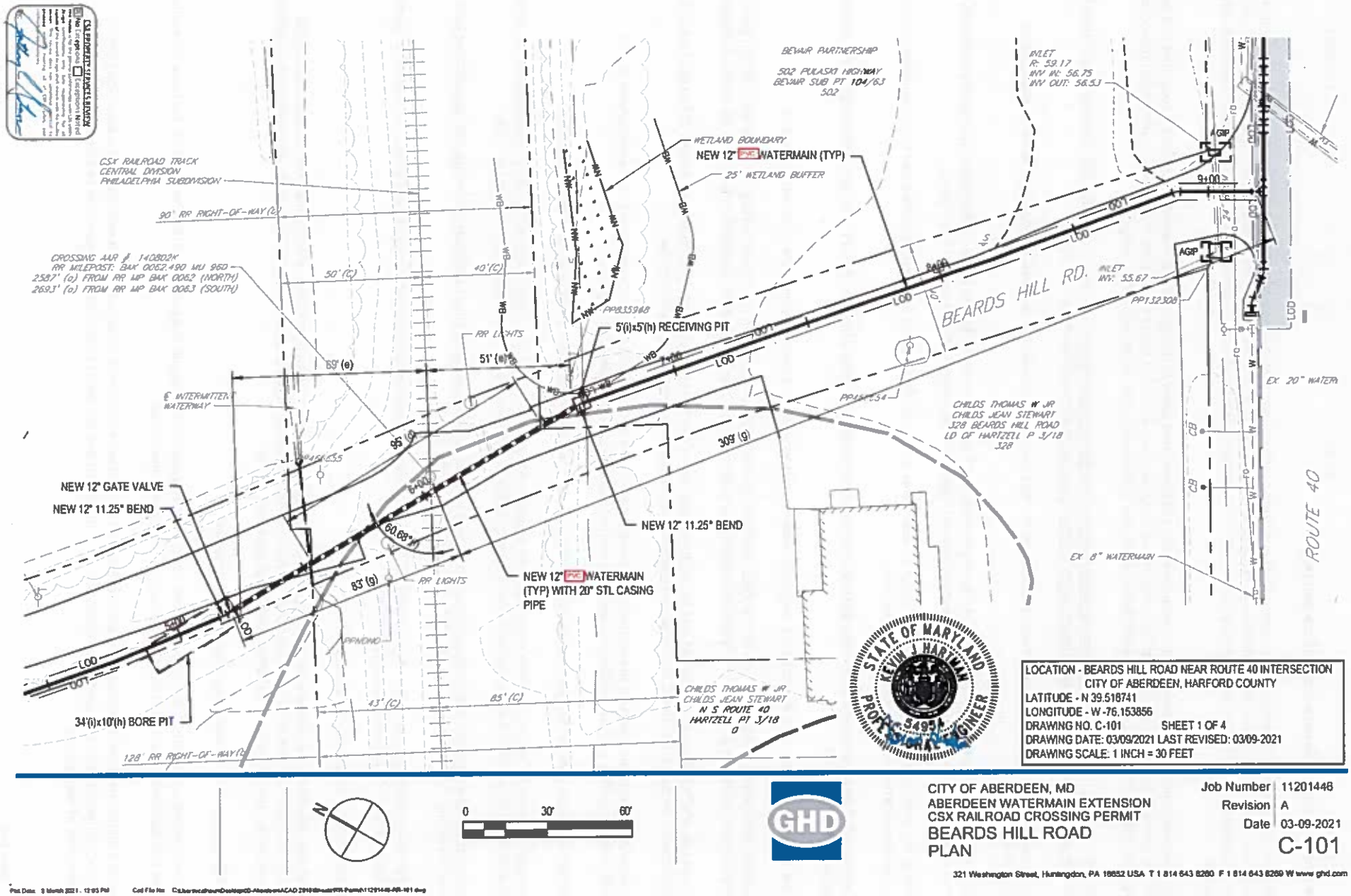
BEVAIR PARTNERSHIP
502 PULASKI HIGHWAY
BEVAIR SUB PT 104/63
502
INLET
R: 59.17
INV IN: 56.75
INV OUT: 56.53
WETLAND BOUNDARY
NEW 12" PVC WATERMAIN (TYP)
25' WETLAND BUFFER
CSX RAILROAD TRACK
CENTRAL DIVISION
PHILADELPHIA SUBDIVISION
90' RR RIGHT-OF-WAY (C)
CROSSING AAR # 140802K
RR MILEPOST: BAK 0062.490 MU 960
2587' (o) FROM RR MP BAK 0062 (NORTH)
2693' (o) FROM RR MP BAK 0063 (SOUTH)
50' (C)
40' (C)
RR LIGHTS
5'(i)x5'(h) RECEIVING PIT
69' (e)
51' (e)
℄ INTERMITTENT WATERWAY
95' (g)
309' (g)
NEW 12" GATE VALVE
NEW 12" 11.25° BEND
NEW 12" 11.25° BEND
60.68°
83' (g)
RR LIGHTS
NEW 12" PVC WATERMAIN (TYP) WITH 20" STL CASING PIPE
34'(i)x10'(h) BORE PIT
43' (C)
85' (C)
128' RR RIGHT-OF-WAY (C)
BEARDS HILL RD.
INLET
INV: 55.67
PP132308
AGIP
9+00
CHILDS THOMAS W JR
CHILDS JEAN STEWART
328 BEARDS HILL ROAD
LD OF HARTZELL P 3/18
328
EX 20" WATER
EX 8" WATERMAIN
ROUTE 40
CHILDS THOMAS W JR
CHILDS JEAN STEWART
N S ROUTE 40
HARTZELL PT 3/18
0
STATE OF MARYLAND
KEVIN J HARTMAN
PROFESSIONAL ENGINEER
LOCATION - BEARDS HILL ROAD NEAR ROUTE 40 INTERSECTION
CITY OF ABERDEEN, HARFORD COUNTY
LATITUDE - N 39.518741
LONGITUDE - W -76.153856
DRAWING NO. C-101 SHEET 1 OF 4
DRAWING DATE: 03/09/2021 LAST REVISED: 03/09-2021
DRAWING SCALE: 1 INCH = 30 FEET
0 30' 60'
GHD
CITY OF ABERDEEN, MD
ABERDEEN WATERMAIN EXTENSION
CSX RAILROAD CROSSING PERMIT
BEARDS HILL ROAD
PLAN
Job Number 11201446
Revision A
Date 03-09-2021
C-101
321 Washington Street, Huntingdon, PA 16652 USA T 1 814 643 8260 F 1 814 643 8269 W www.ghd.com

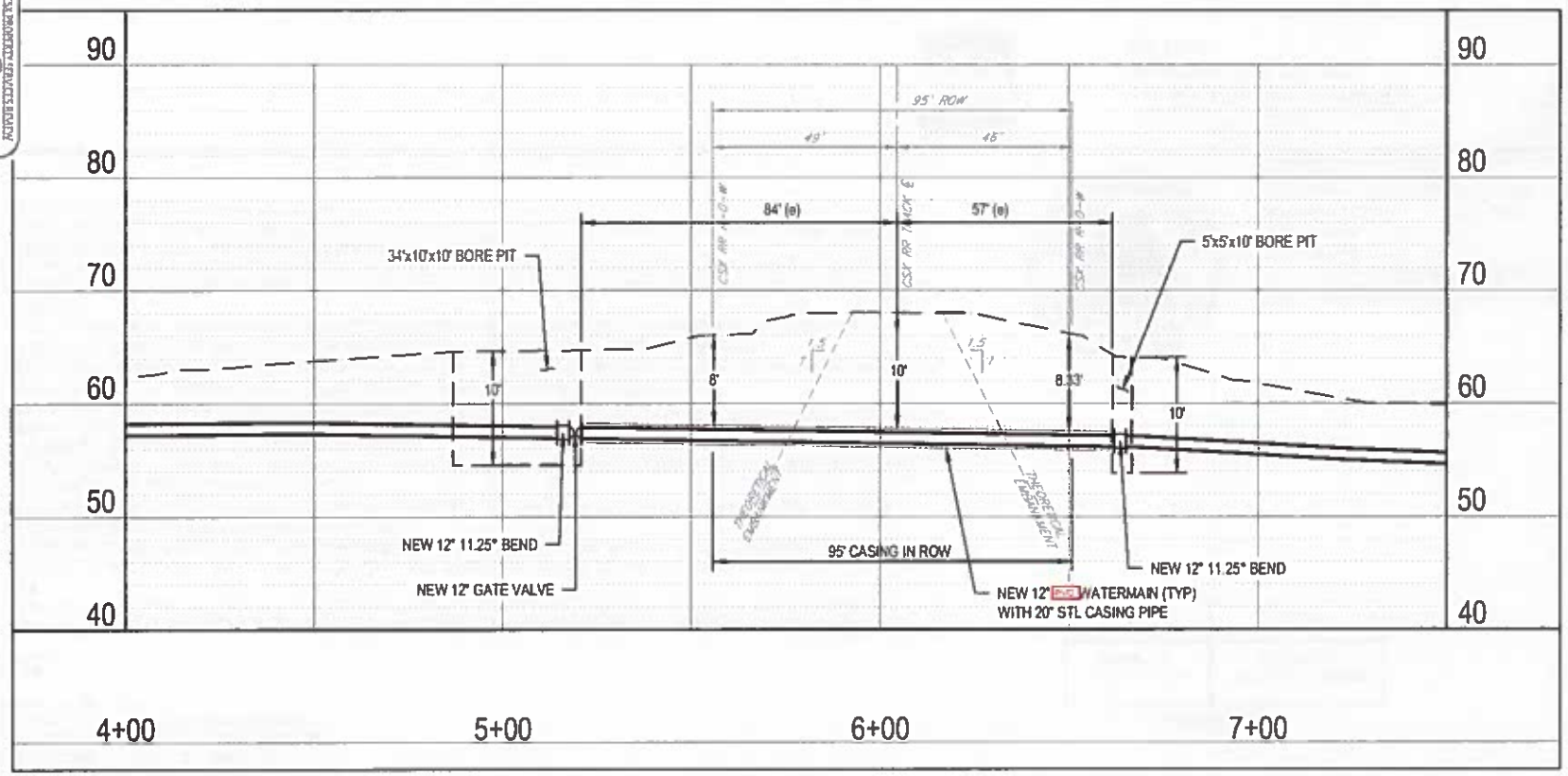

STATE OF MARYLAND
KEVIN J HARTMAN
54954
PROFESSIONAL ENGINEER

LOCATION - BEARDS HILL ROAD NEAR ROUTE 40 INTERSECTION
CITY OF ABERDEEN, HARFORD COUNTY
LATITUDE - N 39.518741
LONGITUDE - W -76.153856
DRAWING NO. C-201 SHEET 2 OF 4
DRAWING DATE: 03/09/2021 LAST REVISED: 03/09-2021
DRAWING SCALE: H: 1 INCH = 30 FEET V: 1 INCH = 10 FEET

0 30' 60'
0 10' 20'

GHD

CITY OF ABERDEEN, MD
ABERDEEN WATERMAIN EXTENSION
CSX RAILROAD CROSSING PERMIT
BEARDS HILL ROAD
PROFILE

Job Number 11201446
Revision A
Date 03-09-2021
C-201

321 Washington Street, Huntingdon, PA 16652 USA T 1 814 643 8260 F 1 814 643 8269 W www.ghd.com

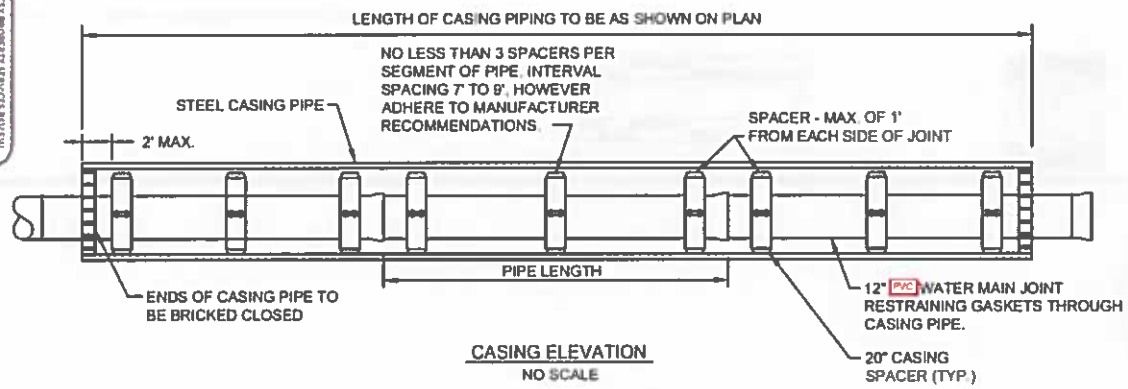

CASING ELEVATION
NO SCALE

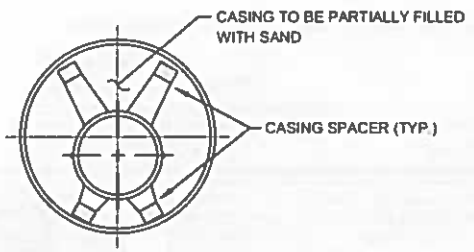

CASING SECTION
NO SCALE

NOTE:
CASING PIPES SHALL BE SMOOTH STEEL WALL CONFORMING TO ASTM A-570 GRADE 36. PLATE THICKNESS 3/8-INCH. CASING SHALL BE BITUMINOUS COATED WITH A MINIMUM YIELD STRENGTH OF 36,000 PSI.

CASING TABLE

NOMINAL PIPE DIAMETER	MINIMUM NOMINAL CASING I.D.
12"	19.25"

NOTES:

1. THE FRONT OF THE CASING PIPE SHALL BE PROVIDED WITH MECHANICAL ARRANGEMENTS OR DEVICES THAT WILL POSITIVELY PREVENT THE AUGER FROM LEADING THE PIPE SO THAT NO UNSUPPORTED EXCAVATION IS AHEAD OF THE PIPE.
2. THE USE OF WATER OR OTHER LIQUIDS TO FACILITATE CASING AND SPOIL REMOVAL IS PROHIBITED.
3. BORING SHALL BE PROGRESSED ON A 24 HOUR BASIS WITHOUT STOPPAGE, EXCEPT FOR ADDING PIPE, UNTIL THE LEADING EDGE HAS REACHED THE RECEIVING PIT.
4. THE OVER-CUT SHALL NOT EXCEED THE OD OF THE CASING PIPE BY NO MORE THAN 1/2". IF OVER-CUT EXCEEDS 1", GROUTING MUST BE USED TO FILL THE VOID.
5. TO AVOID TRANSMITTING SURFACE LOADS TO THE CARRIER PIPE, THE SPACE BETWEEN THE CARRIER AND CASING PIPE SHALL NOT BE COMPLETELY FILLED WITH SAND.
6. DESIGN, CONSTRUCTION, MAINTENANCE, AND REMOVAL OF THE JACKING AND RECEIVING PITS, SHALL BE THE RESPONSIBILITY OF THE CONTRACTOR. THE CONTRACTOR SHALL BE RESPONSIBLE FOR ANY NECESSARY SUPPORT OR PROTECTION OF UTILITIES RELATED TO THE JACKING AND RECEIVING PIT CONSTRUCTION.
7. ALL OPERATIONS SHALL BE CONDUCTED SO AS NOT TO INTERFACE WITH, INTERRUPT, OR ENDANGER THE OPERATION OF TRAFFIC, OR DAMAGE, DESTROY, OR ENDANGER THE INTEGRITY OF ANY SURFACE FACILITIES.
8. CONTRACTOR SHALL SUBMIT PLANS AND DESCRIPTION OF THE CUTTING HEAD ARRANGEMENT TO CSXT FOR APPROVAL.
9. CONTRACTOR SHALL SUBMIT DESIGN PLANS AND COMPUTATIONS FOR THE LAUNCHING AND RECEIVING PITS, SEALED BY A LICENSED PROFESSIONAL ENGINEER, TO CSXT FOR APPROVAL. THE CONTRACTOR MUST OBTAIN APPROVAL FROM CSXT PRIOR TO BEGINNING ANY WORK ON CSXT PROPERTY.
10. ALL EXCAVATED AREAS ARE TO BE ILLUMINATED (FLASHING WARNING LIGHTS NOT PERMITTED), FENCED, AND OTHERWISE PROTECTED AS DIRECTED BY CSXT.

LOCATION - BEARDS HILL ROAD NEAR ROUTE 40 INTERSECTION
CITY OF ABERDEEN, HARFORD COUNTY
LATITUDE - N 39.518741
LONGITUDE - W -76.153856
DRAWING NO. C-501 SHEET 3 OF 4
DRAWING DATE: 03/09/2021 LAST REVISED: 03/09-2021
DRAWING SCALE: NOT TO SCALE

GHD

CITY OF ABERDEEN, MD
ABERDEEN WATERMAIN EXTENSION
CSX RAILROAD CROSSING PERMIT
BEARDS HILL ROAD
DETAIL

Job Number 11201446
Revision A
Date 03-09-2021
C-501

321 Washington Street, Huntingdon, PA 16652 USA T 1 814 643 8260 F 1 814 643 8269 W www.ghd.com

PIPELINE CONTENT DETAILS		
COMMODITY DESCRIPTION	PRESSURIZED, POTABLE WATER	
MAXIMUM OPERATING PRESSURE	77 PSI	
IS COMMODITY FLAMMABLE	NO	
CARRIER / CASING PIPE DETAILS		
	CARRIER PIPE	**CASING PIPE**
PIPE MATERIAL	Polyvinyl Chloride (PVC)	STEEL
MATERIAL SPECIFICATION AND GRADE	ANSI/ AWWA C900 Class 200 (DR 14)	ASTM A-570 - GRADE 36
SPECIFIED MINIMUM YIELD STRENGTH	7,000 PSI	36,000 PSI
NOMINAL SIZE OUTSIDE DIAMETER (INCHES)	13.2"	20"
WALL THICKNESS (INCHES)	1"	0.375"
TYPE OF SEAM	N/A	BUTT WELDED
TYPE OF JOINTS	RUBBER GASKET PUSH ON	WELDED
TUNNEL LINER PLATES REQUIRED	NO	
CATHODIC PROTECTION	NO	
PROTECTIVE COATING	YES TYPE: BITUMINOUS COATING ON STEEL PIPE PER AWWA C210	
TEMP TRACK SUPPORT OR RIP-RAP REQ	NO	

STATE OF MARYLAND
KEVIN J HARTMAN
34954
PROFESSIONAL ENGINEER

LOCATION - BEARDS HILL ROAD NEAR ROUTE 40 INTERSECTION
CITY OF ABERDEEN, HARFORD COUNTY
LATITUDE - N 39.518741
LONGITUDE - W -76.153856
DRAWING NO. C-001 SHEET 4 OF 4
DRAWING DATE: 03/09/2021 LAST REVISED: 03/09-2021
DRAWING SCALE: NOT TO SCALE

GHD

CITY OF ABERDEEN, MD
ABERDEEN WATERMAIN EXTENSION
CSX RAILROAD CROSSING PERMIT
BEARDS HILL ROAD
PIPELINE / CASING TABLE

Job Number 11201446
Revision A
Date 03-09-2021
C-001

321 Washington Street, Huntingdon, PA 16652 USA T 1 814 643 8260 F 1 814 643 8269 W www.ghd.com

Plot Date: 9 March 2021 - 2:08 PM Cad File No: C:\Users\kelhoun\Desktop\03-Aberdeen\ACAD 2018\Sheet\PIR-Permit\11201446-PIR-001.dwg

Kevin Hartman

From: Jackson, Anne <Anne_Jackson@csx.com>
Sent: Thursday, April 15, 2021 1:11 PM
To: Phess@aberdeenmd.gov
Cc: Kevin Hartman; Chad Angle; ktorster@aberdeenmd.gov
Subject: RE: Tracking #1044580 / CSX930303
Attachments: CSX930303 Exhibit A.pdf; CSX930303 Executed.pdf

CompleteRepository: 11201446
Description: Aberdeen Havre de Grace Wtrln Inter
JobNo: 11201446
OperatingCentre: 5644
RepoEmail: 11201446@ghd.com
RepoType: Project

Some people who received this message don't often get email from anne_jackson@csx.com. Learn why this is important Feedback

Good Afternoon,

Attached is the fully executed agreement for your records. Please note the agreement will only be sent electronically. It was a pleasure assisting you with this project and we look forward to working with you in the future. If you have any questions, please contact me at 904-279-3953 or Anne_Jackson@csx.com.

TO SCHEDULE YOUR WORK:
(FORWARD THIS EMAIL TO THE PERSON WHO IS SCHEDULING THE WORK)

Please Note** **You must schedule your work activity though the CSX Property Portal**. The link to the Portal is https://propertyportal.csx.com/pub_ps_res/ps_res/jsf/public/index.faces.

If you haven't already created an account, you will need to do so by selecting the Sign Up link and following the directions in the email you receive. Once signed in, select the option to Submit an Outside Party Request Form. When asked if you have a special reference number select Yes and input **504211304091515**

Follow the remaining steps and please make sure you hit submit to complete the application. Once completed, you should receive a tracking number. After their reivew, our Flagging Coordinator will reach out to you to schedule the work.

Please note the preferred work state date is not guaranteed. Work scheduling requests are reviewed on a first submitted basis and based on how many flagging/inspection resources are available.

In accordance with this Agreement, Agreement Holder is responsible for paying the actual cost of CSX protection services and/or support services, including all applicable surcharges (collectively "Fees").

No work is to be performed on CSX's corridor without (i) proper coordination on the Portal or (ii) without the Flagging Coordinator's and Roadmaster's authorization. CSX requires at least thirty (30) days of notification to schedule protection services and inspection prior to doing any work on CSX's corridor.

It is your responsibility to schedule any work on CSX property with CSX's Flagging Coordinator.

Thank you,

Anne Jackson | CSX Transportation, Inc. | Real Estate
Real Estate Analyst | 500 Water Street, J180 |Jacksonville, FL 32202
PH: 904.279.3953 | Fax: 904.245.4768 | Anne_Jackson@csx.com

Territory - CANADA, CT, DC, DE, IL, IN, MA, MD, MI, NY, PA TN, WV
If an additional review is needed after approval or execution, additional fees will apply.
CSX Property Portal

From: Jackson, Anne
Sent: Tuesday, March 16, 2021 7:42 AM
To: Phess@aberdeenmd.gov
Cc: Kevin.Hartman@ghd.com; Chad.Angle@ghd.com; ktorster@aberdeenmd.gov
Subject: Tracking #1044580 / CSX930303

Good Morning,

Attached is the agreement package for the above referenced project. Please review and return the following:

- **PLEASE REFERENCE YOUR FILE NUMBER ON ALL CORRESPONDENCE**
- Agreement: Please arrange for execution and return the signed and scanned agreement to my attention via email or by mail at the address listed in my email signature.
- Invoice of Fees: Please mail a check made payable to CSX Transportation, Inc. to the mailing address **500 Water Street, J-180, Jacksonville, FL 32202 (include my attention and the CSX agreement no.).**
- Important Notices: Please provide the Certificate of Insurance stating "CSX Transportation, Inc. as additional insured." In addition to CGL, Auto and WC liability policies, Railroad Protective Liability insurance is required. There are 3 options to meet the requirements: (1) provide a separate RPL policy as outlined in the agreement, (2) pay the RPL fee on the invoice which adds the work to the CSX RPL policy or (3) provide CG 24 17 and CA 20 70 endorsements to the CGL and Auto policies provided.

Upon receipt of the above, one original agreement will be returned for your records along with instructions for scheduling your project work efforts.

Please do not hesitate to contact me should there be any questions.

Please note: As of 10/1/18, the Railroad Protective Liability rates have increased.

Thank you,

Anne Jackson | CSX Transportation, Inc. | Real Estate
Real Estate Analyst | 500 Water Street, J180 |Jacksonville, FL 32202
PH: 904.279.3953 | Fax: 904.245.4768 | Anne_Jackson@csx.com

Territory - CANADA, CT, DC, DE, IL, IN, MA, MD, MI, NY, PA TN, WV
If an additional review is needed after approval or execution, additional fees will apply.
CSX Property Portal

CITY OF ABERDEEN

Harford County, Maryland

DEPARTMENT OF PUBLIC WORKS

ABERDEEN WATERMAIN EXTENSION
CONTRACT NO. 21-12

AVAILABLE REPORTS (24 sheets)

REPORT OF
GEOTECHNICAL EXPLORATION

RAILBIRD ALLEY WATER BOOSTER PUMP STATION

Harford County, Maryland

July 22, 2021

Prepared For:

GHD, Inc.
1240 North Mountain Road
Harrisburg, Pennsylvania 17112

Attn: Mr. Chad M. Angle, P.E.

Prepared By:

GEO-TECHNOLOGY ASSOCIATES, INC.
Geotechnical and Environmental Consultants
3445-A Box Hill Corporate Center Drive
Abingdon, Maryland 21009
(410) 515-9446
www.gtaeng.com

GTA Project No: 31210060

GEO-TECHNOLOGY ASSOCIATES, INC.

GEOTECHNICAL AND
ENVIRONMENTAL CONSULTANTS

A Practicing Geoprofessional Business Association Member Firm

July 22, 2021

GHD, Inc.
1240 North Mountain Road
Harrisburg, Pennsylvania 17112

Attn: Mr. Chad M. Angle, P.E.
Senior Engineer

Re: Report of Geotechnical Exploration
Railbird Alley Water Booster Pump Station
Harford County, Maryland

Dear Mark:

In accordance with our agreement, Geo-Technology Associates, Inc. (GTA) has performed a geotechnical exploration for the proposed Railbird Alley Water Booster Pump Station located south of the Railbird Alley and Beards Hill Road intersection in Harford County, Maryland. The exploration consisted of drilling one test boring at the center of the proposed booster station, performing Standard Penetration Testing in the encountered soils, and evaluating the recovered soils to identify their engineering characteristics. The results of the field testing and recommendations regarding design and construction of the water booster station are included in the attached Report.

GTA appreciates the opportunity to have been of assistance to you on this project. Should you have any questions or require any additional information, please contact our office at (410) 515-9446.

Sincerely,
GEO-TECHNOLOGY ASSOCIATES, INC.

Eric B. Church, P.E.
Associate

Thomas M. Wirth, P.E.
Vice President

STATE OF MARYLAND · ERIC BRITTIAN CHURCH · 43565 · PROFESSIONAL ENGINEER

Professional Certification. I hereby certify that these documents were prepared or approved by me, and that I am a duly licensed Professional Engineer under the laws of the State of Maryland. License No.: 43565, Expiration Date: 06/18/2023. EBC

RCW/EBC/TMW/amt
31210060
\\PSMC-DATA\gta\Shared\Project Files\2021\31210060 Aberdeen Watermain Extension\GEO\Reports\GEO 31210060 Railbird Alley Water Booster Pump Station geo rpt.doc

TABLE OF CONTENTS

INTRODUCTION 1
SITE CONDITIONS 1
RELEVANT GEOLOGY 1
SUBSURFACE EXPLORATION 2
SUBSURFACE CONDITIONS 3
LABORATORY TESTING 3
CONCLUSIONS AND RECOMMENDATIONS 3
Foundation Recommendations 4
Floor Design 5
Site Work 5
Water Conditions 6
LIMITATIONS 6

GBA Publication – "Important Information About Your Geotechnical Engineering Report" (2 Pages)

APPENDICES

Appendix A – Figures
Figure 1 – *Boring Location Plan*
Figure 2 – *USGS Topographic Map*
Figure 3 – *Footing Subgrade Modification Detail*

Appendix B – Boring Logs
Notes for Exploration Logs *(1 Sheet)*
Boring Logs *(1 Log)*

Appendix C – Laboratory Data
Laboratory Test Results *(1 Sheet)*

REPORT OF
GEOTECHNICAL EXPLORATION

RAILBIRD ALLEY WATER BOOSTER PUMP STATION
HARFORD COUNTY, MARYLAND
JULY 22, 2021

INTRODUCTION

This Report presents the results of the geotechnical exploration performed for the proposed Railbird Alley Water Booster Pump Station (Site) located in Harford County, Maryland. In conjunction with the exploration, Geo-Technology Associates, Inc. (GTA) was provided with the *Enlarged Site Plan* (Plan) by GHD, Inc. on July 12, 2021, which indicates that the Site will include booster pump pad, control building, and associated paving. To facilitate the design of the proposed booster station, GTA was retained to perform a geotechnical exploration. The scope of this study included a field exploration, laboratory testing, and engineering analysis. The results of the field exploration and recommendations regarding design and construction of the proposed site improvements, are included in this Report.

SITE CONDITIONS

The Site is located south of the intersection of Railbird Alley and Beards Hill Road. At the time of our exploration, the Site consisted of heavy brush and moderately-dense woods. The topography at the site can be described as gently sloping to the southeast towards a pond. The Plan indicates that the ground surface elevations at the Site range from approximately elevation (El.) 73 feet above Mean Sea Level (ft MSL) in the northern-most portion of the Site, to approximately El. 69 at the southeastern-most portion of the Site. The pond surface was at approximately El. 62.

RELEVANT GEOLOGY

GTA's review of the *Geologic Map of Harford County, Maryland* (Map), published by the Maryland Geological Survey and dated 1968, indicates that the area in the vicinity of the project is situated within the Piedmont Physiographic province. The Piedmont is characterized by strongly folded and faulted metamorphic rocks, overlain by residual soils derived from the in-situ decomposition of the parent bedrock. Specifically, the Piedmont rocks are identified on the Map as Metagabbro and Amphibolite. The residual soils derived from the weathering of these rock units

typically consist of silts and clays with varying degrees of plasticity, and subordinate amounts of sand. For a more detailed description of the geologic features, refer to the referenced Map.

SUBSURFACE EXPLORATION

The subsurface conditions at the site were evaluated by drilling one test boring within the approximate center of the proposed pump station. The test boring, identified as B-1, was drilled to a depth of approximately 30 feet below the existing ground surface (ft bgs). The test boring location was selected and field located by GTA using existing site features and GPS instrumentation. The location of the test boring is depicted on the *Boring Location Plan* included as *Figure 1* in *Appendix A*. A USGS Topographic Map for Aberdeen, Maryland (2011) depicting the site and surrounding area has been included as *Figure 2* in *Appendix A*.

The test boring was drilled on July 16, 2021, and advanced to the final depth using an Acker XLS ATV-mounted drill rig equipped with 3¼-inch hollow-stem augers. Standard Penetration Tests (SPTs) were performed as the boring was advanced. Continuous samples were obtained within the first 10 feet of drilling, and at 5-foot intervals thereafter. Standard Penetration Testing involves driving a 2-inch outside diameter (O.D.), 1⅜-inch inside diameter (I.D.) split-spoon sampler into the soil a distance of 18 inches after a seating interval of 6 inches using a 140-pound hammer falling 30 inches. The number of blows required to drive the sampler from 6 to 18 inches of penetration is termed the SPT N-value and is indicated for each test interval on the test boring logs. The SPT N-values are reported as the number of blows per foot (bpf) of sampler penetration. The split-spoon sampler was generally driven a total of 24 inches. A soil sample was collected at each SPT location from the split-barrel sampler. The drill rig employs an automatic trip-hammer system to perform the SPT.

Descriptions provided on the test boring logs are based on visual classifications by a GTA geologist in the field, supplemented by available laboratory test results. *Appendix B* contains the *Notes for Exploration Logs* that provides a brief explanation of the Unified Soil Classification System (USCS) descriptions and other terminology contained on the logs. The ground surface elevations indicated within this Report were interpolated from the site topography shown on the Plan. Therefore, all elevations, as well as transitions in soil strata indicated on the test boring logs, should be considered approximate. The logs of the test borings are presented in *Appendix B*.

SUBSURFACE CONDITIONS

In agreement with the published geology and our observations at the site, the test borings encountered residual soils associated with the in-place weathering of the Metagabbro and Amphibolite throughout the depth of drilling. Approximately 1 inch of topsoil was encountered at the surface of the boring. Due to the thick brush and tree growth, root mat may extend to a depth of approximately 6 to 12 inches.

Below the topsoil, residual fine-grained soils were classified by the Unified Soil Classification System (USCS) as Lean CLAY (CL) and Elastic SILT (MH), with varying amounts of rock fragments. The SPT N-value of the fine-grained soils ranged from 3 to 21 bpf, averaging approximately 12 bpf. A layer of granular soil was encountered below the fine-grained soils and was classified as Clayey SAND (SC) with rock fragments, with an SPT N-value of 39 bpf. Weathered or competent rock were not encountered during drilling.

Water measurements were performed during drilling, at the completion of drilling, and three days after drilling. Water was encountered after drilling at a depth of approximately 1.5 ft bgs, and after drilling at a depth of 2.8 ft bgs. Fluctuations in groundwater levels by as much as 2 to 4 feet may occur due to variations in precipitation, stream levels, and seasonal changes.

LABORATORY TESTING

A soil sample obtained from the explorations was submitted for limited laboratory analysis, including natural moisture content determinations, grain-size analysis, and plasticity testing. The results of the limited laboratory testing are included in *Appendix C*.

CONCLUSIONS AND RECOMMENDATIONS

Based upon the results of this exploration, it is our opinion that construction of the proposed improvements is feasible, given that the following recommendations are observed, and that the standard level of care is maintained during construction. A discussion of our findings and general site development considerations is included in the following paragraphs.

REPORT OF
GEOTECHNICAL EXPLORATION

RAILBIRD ALLEY WATER BOOSTER PUMP STATION
HARFORD COUNTY, MARYLAND
JULY 22, 2021

INTRODUCTION

This Report presents the results of the geotechnical exploration performed for the proposed Railbird Alley Water Booster Pump Station (Site) located in Harford County, Maryland. In conjunction with the exploration, Geo-Technology Associates, Inc. (GTA) was provided with the *Enlarged Site Plan* (Plan) by GHD, Inc. on July 12, 2021, which indicates that the Site will include booster pump pad, control building, and associated paving. To facilitate the design of the proposed booster station, GTA was retained to perform a geotechnical exploration. The scope of this study included a field exploration, laboratory testing, and engineering analysis. The results of the field exploration and recommendations regarding design and construction of the proposed site improvements, are included in this Report.

SITE CONDITIONS

The Site is located south of the intersection of Railbird Alley and Beards Hill Road. At the time of our exploration, the Site consisted of heavy brush and moderately-dense woods. The topography at the site can be described as gently sloping to the southeast towards a pond. The Plan indicates that the ground surface elevations at the Site range from approximately elevation (El.) 73 feet above Mean Sea Level (ft MSL) in the northern-most portion of the Site, to approximately El. 69 at the southeastern-most portion of the Site. The pond surface was at approximately El. 62.

RELEVANT GEOLOGY

GTA's review of the *Geologic Map of Harford County, Maryland* (Map), published by the Maryland Geological Survey and dated 1968, indicates that the area in the vicinity of the project is situated within the Piedmont Physiographic province. The Piedmont is characterized by strongly folded and faulted metamorphic rocks, overlain by residual soils derived from the in-situ decomposition of the parent bedrock. Specifically, the Piedmont rocks are identified on the Map as Metagabbro and Amphibolite. The residual soils derived from the weathering of these rock units

typically consist of silts and clays with varying degrees of plasticity, and subordinate amounts of sand. For a more detailed description of the geologic features, refer to the referenced Map.

SUBSURFACE EXPLORATION

The subsurface conditions at the site were evaluated by drilling one test boring within the approximate center of the proposed pump station. The test boring, identified as B-1, was drilled to a depth of approximately 30 feet below the existing ground surface (ft bgs). The test boring location was selected and field located by GTA using existing site features and GPS instrumentation. The location of the test boring is depicted on the *Boring Location Plan* included as *Figure 1* in *Appendix A*. A USGS Topographic Map for Aberdeen, Maryland (2011) depicting the site and surrounding area has been included as *Figure 2* in *Appendix A*.

The test boring was drilled on July 16, 2021, and advanced to the final depth using an Acker XLS ATV-mounted drill rig equipped with 3¼-inch hollow-stem augers. Standard Penetration Tests (SPTs) were performed as the boring was advanced. Continuous samples were obtained within the first 10 feet of drilling, and at 5-foot intervals thereafter. Standard Penetration Testing involves driving a 2-inch outside diameter (O.D.), 1⅜-inch inside diameter (I.D.) split-spoon sampler into the soil a distance of 18 inches after a seating interval of 6 inches using a 140-pound hammer falling 30 inches. The number of blows required to drive the sampler from 6 to 18 inches of penetration is termed the SPT N-value and is indicated for each test interval on the test boring logs. The SPT N-values are reported as the number of blows per foot (bpf) of sampler penetration. The split-spoon sampler was generally driven a total of 24 inches. A soil sample was collected at each SPT location from the split-barrel sampler. The drill rig employs an automatic trip-hammer system to perform the SPT.

Descriptions provided on the test boring logs are based on visual classifications by a GTA geologist in the field, supplemented by available laboratory test results. *Appendix B* contains the *Notes for Exploration Logs* that provides a brief explanation of the Unified Soil Classification System (USCS) descriptions and other terminology contained on the logs. The ground surface elevations indicated within this Report were interpolated from the site topography shown on the Plan. Therefore, all elevations, as well as transitions in soil strata indicated on the test boring logs, should be considered approximate. The logs of the test borings are presented in *Appendix B*.

SUBSURFACE CONDITIONS

In agreement with the published geology and our observations at the site, the test borings encountered residual soils associated with the in-place weathering of the Metagabbro and Amphibolite throughout the depth of drilling. Approximately 1 inch of topsoil was encountered at the surface of the boring. Due to the thick brush and tree growth, root mat may extend to a depth of approximately 6 to 12 inches.

Below the topsoil, residual fine-grained soils were classified by the Unified Soil Classification System (USCS) as Lean CLAY (CL) and Elastic SILT (MH), with varying amounts of rock fragments. The SPT N-value of the fine-grained soils ranged from 3 to 21 bpf, averaging approximately 12 bpf. A layer of granular soil was encountered below the fine-grained soils and was classified as Clayey SAND (SC) with rock fragments, with an SPT N-value of 39 bpf. Weathered or competent rock were not encountered during drilling.

Water measurements were performed during drilling, at the completion of drilling, and three days after drilling. Water was encountered after drilling at a depth of approximately 1.5 ft bgs, and after drilling at a depth of 2.8 ft bgs. Fluctuations in groundwater levels by as much as 2 to 4 feet may occur due to variations in precipitation, stream levels, and seasonal changes.

LABORATORY TESTING

A soil sample obtained from the explorations was submitted for limited laboratory analysis, including natural moisture content determinations, grain-size analysis, and plasticity testing. The results of the limited laboratory testing are included in *Appendix C.*

CONCLUSIONS AND RECOMMENDATIONS

Based upon the results of this exploration, it is our opinion that construction of the proposed improvements is feasible, given that the following recommendations are observed, and that the standard level of care is maintained during construction. A discussion of our findings and general site development considerations is included in the following paragraphs.

Foundation Recommendations

Based on the planned construction, our assumptions, and results of the subsurface investigation, the structure can be supported on shallow spread footings. For the assumed loading conditions, a design net allowable bearing capacity of 2,000 pounds per square foot (psf) is feasible for footings bearing on suitable natural soils or controlled compacted fill.

If unsuitable conditions are encountered during the foundation excavation process, these materials should be removed and replaced with open-graded stone or lean-mix concrete. Unsuitable conditions may be defined as soft or loose soils, expansive soils, or soils of significantly varying bearing capacity. The decision to perform the over-excavation procedures should be made by the Geotechnical Engineer or their designated representative. A typical detail titled, *Footing Subgrade Modification Detail*, depicting the removal/replacement technique is presented as *Figure 3* in *Appendix A*, attached to this Report.

Standard footing details should prove acceptable for this project. Minimum widths for wall footings of 18 inches and column footings of 30 inches are recommended when design based on the above bearing pressures results in a narrower footing. Exterior footings should be founded a minimum of 30 inches below final exterior grade to provide protection from frost action. Interior foundations in heated portions of the structure may be established at depths below the floor slab equal to the minimum footing thickness. Our calculations indicate a maximum settlement on the order of 1-inch total and ½-inch differential can be anticipated based upon these design considerations; however, actual settlements will depend on the actual loads, depth of footings, the soils encountered, and the thickness of structural fills. GTA requests the opportunity to review the structural plans and loading information prior to finalizing the foundation design.

The International Building Code (IBC) specifies that a detailed foundation bearing surface evaluation be performed for each footing excavation during construction. The foundation bearing surface evaluations should be performed using a combination of visual observations, hand-rod probing, and Dynamic Cone Penetrometer (DCP) testing by a Geotechnical Engineer or their designated representative. A detailed geotechnical exploration is recommended for most of the structures subsequent to mass grading.

Floor Design

Based on the results of the investigation, it is anticipated that floor slabs can be designed as concrete slabs on grade. All subgrades for support of the slabs should be observed to evaluate stability prior to the placement of the drainage layer and concrete. GTA recommends that the concrete floor slab supported on grade be founded on a minimum 6-inch-thick layer of AASHTO No. 57 aggregate. The aggregate layer will interrupt the rise of capillary moisture through the slab as well as provide drainage for the slab subgrade. The slabs may bear on wall projections, but they should be jointed so that the foundation walls can settle independently from the slab.

Site Work

Clearing, grubbing, the stripping of existing debris and removal of organic surface soils should be performed in advance of any fill operations. GTA recommends a stripping thickness of 6 inches to account for the transitional soil and deeper root material. Areas to receive structural fill should be proof-rolled to locate any soft or loose areas on the fill subgrade. Soils identified as being unsuitable or unstable should be undercut to a stable stratum and backfilled with controlled, compacted fill. The backfill of over-excavated areas will need to be performed in accordance with the following paragraphs.

It is anticipated that the natural moisture content of the on-site soils will be well above their optimum moisture content (OMC) for compaction. The predominant fine-grained and plastic soils will be difficult to dry by aeration, even in the summer months. Due to their moisture-sensitive nature and elevated natural moisture content, it may be necessary to complete the structural grading fills or utility trench backfills with suitable imported fill material. Off-site borrow fill material should meet AASHTO A-2-4 or more granular, and should be approved by the Geotechnical Engineer.

Soils should be placed in lifts not to exceed 8 inches in loose thickness and compacted to 92 percent of the Modified Proctor maximum dry density, within 3 percent of its OMC. The grading contractor should maintain adequate drainage during site grading. Fill construction should be monitored by a full-time soil technician working under the supervision of a registered Geotechnical Engineer. Compaction effort should be verified by in-place density testing where required.

Water Conditions

Shallow water conditions were encountered after drilling at a depth of approximately 1.5 ft bgs and will likely affect construction of the foundations and installation of the subsurface utilities. During grading operations, surface grades should be maintained to direct surface runoff to the proper sediment controls. Problems associated with groundwater include seepage into the excavation, partial loss of stability, and sloughing of soils. Due to the potential for collapse of unsupported excavation, contractors should provide adequate earth support and dewatering systems in excavations. Water within utility excavations may be reduced at the time of construction through the use of "sump and pump" dewatering techniques.

LIMITATIONS

This Report, including all supporting test boring logs, field data, field notes, calculations, estimates, and other documents prepared by GTA in connection with this project, has been prepared for the exclusive use of GHD, Inc. pursuant to the agreement between GTA and GHD, Inc., dated May 30, 2019, and in accordance with generally accepted engineering practice. All terms and conditions set forth in the Agreement and the General Provisions attached thereto are incorporated herein by reference. No warranty, express or implied, is given herein. Use and reproduction of this Report by any other person without the expressed written permission of GTA, and GHD, Inc., is unauthorized and such use is at the sole risk of the user.

The analysis and recommendations contained in this Report are based on the data obtained from limited observation and testing of the encountered materials. Subsurface explorations indicate soil conditions only at specific locations and times and only at the depths penetrated. They do not necessarily reflect strata or variations that may exist throughout the property. Consequently, the analysis and recommendations must be considered preliminary until the subsurface conditions can be verified by direct observation at the time of construction. If variations of subsurface conditions from those described in this Report are noted during construction, recommendations in this Report may need to be re-evaluated.

In the event that any changes in the nature, design, or location of the facilities are planned, the conclusions and recommendations contained in this Report should not be considered valid unless

the changes are reviewed and conclusions of this Report are verified in writing. GTA is not responsible for any claims, damages, or liability associated with interpretation of subsurface data or reuse of the subsurface data or engineering analysis without the expressed written authorization of GTA.

The scope of our services for this geotechnical exploration did not include any environmental assessment or investigation for the presence or absence of hazardous or toxic materials in the soil, surface water, groundwater or air, on or below or around this site. Any statements in this Report or on the logs regarding odors or unusual or suspicious items or conditions observed are strictly for the information of our Client.

This Report and the attached logs are instruments of service. The subject matter of this Report is limited to the facts and matters stated herein. Absence of a reference to any other conditions or subject matter shall not be construed by the reader to imply approval by the writer.

The soil samples obtained in conjunction with this exploration will be discarded 60 days after the date of this Report unless other arrangements are made by the Client. Thank you for this opportunity to assist you. Should you have any questions or require additional information, please do not hesitate to contact our office.

*****END OF REPORT*****

Important Information about This

Geotechnical-Engineering Report

Subsurface problems are a principal cause of construction delays, cost overruns, claims, and disputes.

While you cannot eliminate all such risks, you can manage them. The following information is provided to help.

The Geoprofessional Business Association (GBA) has prepared this advisory to help you – assumedly a client representative – interpret and apply this geotechnical-engineering report as effectively as possible. In that way, clients can benefit from a lowered exposure to the subsurface problems that, for decades, have been a principal cause of construction delays, cost overruns, claims, and disputes. If you have questions or want more information about any of the issues discussed below, contact your GBA-member geotechnical engineer. Active involvement in the Geoprofessional Business Association exposes geotechnical engineers to a wide array of risk-confrontation techniques that can be of genuine benefit for everyone involved with a construction project.

Geotechnical-Engineering Services Are Performed for Specific Purposes, Persons, and Projects

Geotechnical engineers structure their services to meet the specific needs of their clients. A geotechnical-engineering study conducted for a given civil engineer will not likely meet the needs of a civil-works constructor or even a different civil engineer. Because each geotechnical-engineering study is unique, each geotechnical-engineering report is unique, prepared *solely* for the client. *Those who rely on a geotechnical-engineering report prepared for a different client can be seriously misled.* No one except authorized client representatives should rely on this geotechnical-engineering report without first conferring with the geotechnical engineer who prepared it. *And no one – not even you – should apply this report for any purpose or project except the one originally contemplated.*

Read this Report in Full

Costly problems have occurred because those relying on a geotechnical-engineering report did not read it *in its entirety*. Do not rely on an executive summary. Do not read selected elements only. *Read this report in full.*

You Need to Inform Your Geotechnical Engineer about Change

Your geotechnical engineer considered unique, project-specific factors when designing the study behind this report and developing the confirmation-dependent recommendations the report conveys. A few typical factors include:

- the client's goals, objectives, budget, schedule, and risk-management preferences;
- the general nature of the structure involved, its size, configuration, and performance criteria;
- the structure's location and orientation on the site; and
- other planned or existing site improvements, such as retaining walls, access roads, parking lots, and underground utilities.

Typical changes that could erode the reliability of this report include those that affect:

- the site's size or shape;
- the function of the proposed structure, as when it's changed from a parking garage to an office building, or from a light-industrial plant to a refrigerated warehouse;
- the elevation, configuration, location, orientation, or weight of the proposed structure;
- the composition of the design team; or
- project ownership.

As a general rule, *always* inform your geotechnical engineer of project changes – even minor ones – and request an assessment of their impact. *The geotechnical engineer who prepared this report cannot accept responsibility or liability for problems that arise because the geotechnical engineer was not informed about developments the engineer otherwise would have considered.*

This Report May Not Be Reliable

Do not rely on this report if your geotechnical engineer prepared it:

- for a different client;
- for a different project;
- for a different site (that may or may not include all or a portion of the original site); or
- before important events occurred at the site or adjacent to it; e.g., man-made events like construction or environmental remediation, or natural events like floods, droughts, earthquakes, or groundwater fluctuations.

Note, too, that it could be unwise to rely on a geotechnical-engineering report whose reliability may have been affected by the passage of time, because of factors like changed subsurface conditions; new or modified codes, standards, or regulations; or new techniques or tools. *If your geotechnical engineer has not indicated an "apply-by" date on the report, ask what it should be,* and, in general, *if you are the least bit uncertain* about the continued reliability of this report, contact your geotechnical engineer before applying it. A minor amount of additional testing or analysis – if any is required at all – could prevent major problems.

Most of the "Findings" Related in This Report Are Professional Opinions

Before construction begins, geotechnical engineers explore a site's subsurface through various sampling and testing procedures. *Geotechnical engineers can observe actual subsurface conditions only at those specific locations where sampling and testing were performed.* The data derived from that sampling and testing were reviewed by your geotechnical engineer, who then applied professional judgment to form opinions about subsurface conditions throughout the site. Actual sitewide-subsurface conditions may differ – maybe significantly – from those indicated in this report. Confront that risk by retaining your geotechnical engineer to serve on the design team from project start to project finish, so the individual can provide informed guidance quickly, whenever needed.

This Report's Recommendations Are Confirmation-Dependent

The recommendations included in this report – including any options or alternatives – are confirmation-dependent. In other words, *they are not final*, because the geotechnical engineer who developed them relied heavily on judgment and opinion to do so. Your geotechnical engineer can finalize the recommendations *only after observing actual subsurface conditions* revealed during construction. If through observation your geotechnical engineer confirms that the conditions assumed to exist actually do exist, the recommendations can be relied upon, assuming no other changes have occurred. *The geotechnical engineer who prepared this report cannot assume responsibility or liability for confirmation-dependent recommendations if you fail to retain that engineer to perform construction observation.*

This Report Could Be Misinterpreted

Other design professionals' misinterpretation of geotechnical-engineering reports has resulted in costly problems. Confront that risk by having your geotechnical engineer serve as a full-time member of the design team, to:

- confer with other design-team members,
- help develop specifications,
- review pertinent elements of other design professionals' plans and specifications, and
- be on hand quickly whenever geotechnical-engineering guidance is needed.

You should also confront the risk of constructors misinterpreting this report. Do so by retaining your geotechnical engineer to participate in prebid and preconstruction conferences and to perform construction observation.

Give Constructors a Complete Report and Guidance

Some owners and design professionals mistakenly believe they can shift unanticipated-subsurface-conditions liability to constructors by limiting the information they provide for bid preparation. To help prevent the costly, contentious problems this practice has caused, include the complete geotechnical-engineering report, along with any attachments or appendices, with your contract documents, *but be certain to note conspicuously that you've included the material for informational purposes only.* To avoid misunderstanding, you may also want to note that "informational purposes" means constructors have no right to rely on the interpretations, opinions, conclusions, or recommendations in the report, but they may rely on the factual data relative to the specific times, locations, and depths/elevations referenced. Be certain that constructors know they may learn about specific project requirements, including options selected from the report, *only* from the design drawings and specifications. Remind constructors that they may perform their own studies if they want to, and *be sure to allow enough time* to permit them to do so. Only then might you be in a position to give constructors the information available to you, while requiring them to at least share some of the financial responsibilities stemming from unanticipated conditions. Conducting prebid and preconstruction conferences can also be valuable in this respect.

Read Responsibility Provisions Closely

Some client representatives, design professionals, and constructors do not realize that geotechnical engineering is far less exact than other engineering disciplines. That lack of understanding has nurtured unrealistic expectations that have resulted in disappointments, delays, cost overruns, claims, and disputes. To confront that risk, geotechnical engineers commonly include explanatory provisions in their reports. Sometimes labeled "limitations," many of these provisions indicate where geotechnical engineers' responsibilities begin and end, to help others recognize their own responsibilities and risks. *Read these provisions closely.* Ask questions. Your geotechnical engineer should respond fully and frankly.

Geoenvironmental Concerns Are Not Covered

The personnel, equipment, and techniques used to perform an environmental study – e.g., a "phase-one" or "phase-two" environmental site assessment – differ significantly from those used to perform a geotechnical-engineering study. For that reason, a geotechnical-engineering report does not usually relate any environmental findings, conclusions, or recommendations; e.g., about the likelihood of encountering underground storage tanks or regulated contaminants. *Unanticipated subsurface environmental problems have led to project failures.* If you have not yet obtained your own environmental information, ask your geotechnical consultant for risk-management guidance. As a general rule, *do not rely on an environmental report prepared for a different client, site, or project, or that is more than six months old.*

Obtain Professional Assistance to Deal with Moisture Infiltration and Mold

While your geotechnical engineer may have addressed groundwater, water infiltration, or similar issues in this report, none of the engineer's services were designed, conducted, or intended to prevent uncontrolled migration of moisture – including water vapor – from the soil through building slabs and walls and into the building interior, where it can cause mold growth and material-performance deficiencies. Accordingly, ***proper implementation of the geotechnical engineer's recommendations will not of itself be sufficient to prevent moisture infiltration.*** Confront the risk of moisture infiltration by including building-envelope or mold specialists on the design team. ***Geotechnical engineers are not building-envelope or mold specialists.***

GEOPROFESSIONAL BUSINESS ASSOCIATION

Telephone: 301/565-2733
e-mail: info@geoprofessional.org www.geoprofessional.org

Copyright 2016 by Geoprofessional Business Association (GBA). Duplication, reproduction, or copying of this document, in whole or in part, by any means whatsoever, is strictly prohibited, except with GBA's specific written permission. Excerpting, quoting, or otherwise extracting wording from this document is permitted only with the express written permission of GBA, and only for purposes of scholarly research or book review. Only members of GBA may use this document or its wording as a complement to or as an element of a report of any kind. Any other firm, individual, or other entity that so uses this document without being a GBA member could be committing negligent

APPENDIX A

FIGURES

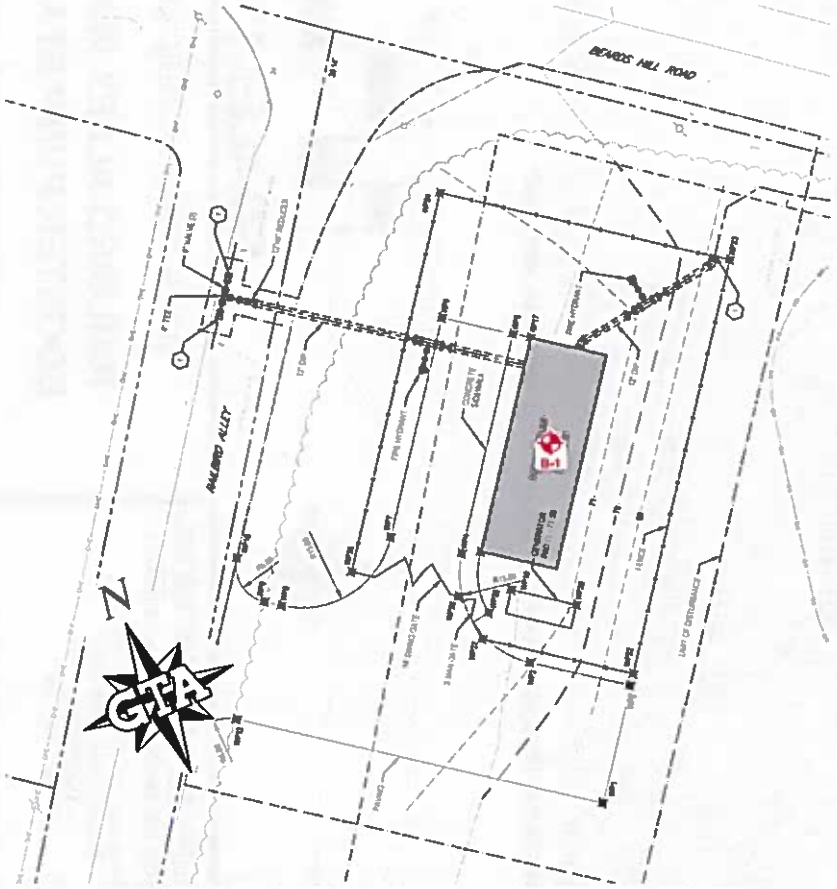

SOURCE: BASE PLAN ADAPTED FROM AN EXISTING PLAN TITLED "ENLARGED SITE PLAN FOR THE RAILBIRD ALLEY WATER BOOSTER PUMP STATION" PREPARED BY GHD, INC.

SOURCE: PLAN ADAPTED FROM A 2021 AERIAL PHOTOGRAPH OF HARFORD COUNTY, MARYLAND MAINTAINED BY GOOGLE EARTH <WWW.EARTH.GOOGLE.COM>

VICINITY MAP

SCALE: 1" = 1000'

LEGEND

B-1 — APPROXIMATE LOCATION OF SPT BORING

0' 5' 10' 20' 40'

SCALE: 1"=20'

GTA	GEO-TECHNOLOGY ASSOCIATES, INC. GEOTECHNICAL AND ENVIRONMENTAL CONSULTANTS 3445-A BOX HILL CORPORATE CENTER DRIVE ABINGDON, MARYLAND 21009 410-515-9446 WWW.GTAENG.COM © 2021 GEO-TECHNOLOGY ASSOCIATES, INC.			BORING LOCATION PLAN **RAILBIRD ALLEY WATER BOOSTER PUMP STATION** HARFORD COUNTY, MARYLAND			
JOB NO.	31210060	SCALE:	1"=20'	DATE:	JULY 2021	DRAWN BY: RCW	REVIEW BY: TMW	FIGURE: 1

L:\SHARED\PROJECT FILES\2021\31210060 ABERDEEN WATERMAIN EXTENSION\GEOCAD\GEO 31210060 ABERDEEN WATER BOOSTER STATION.dwg

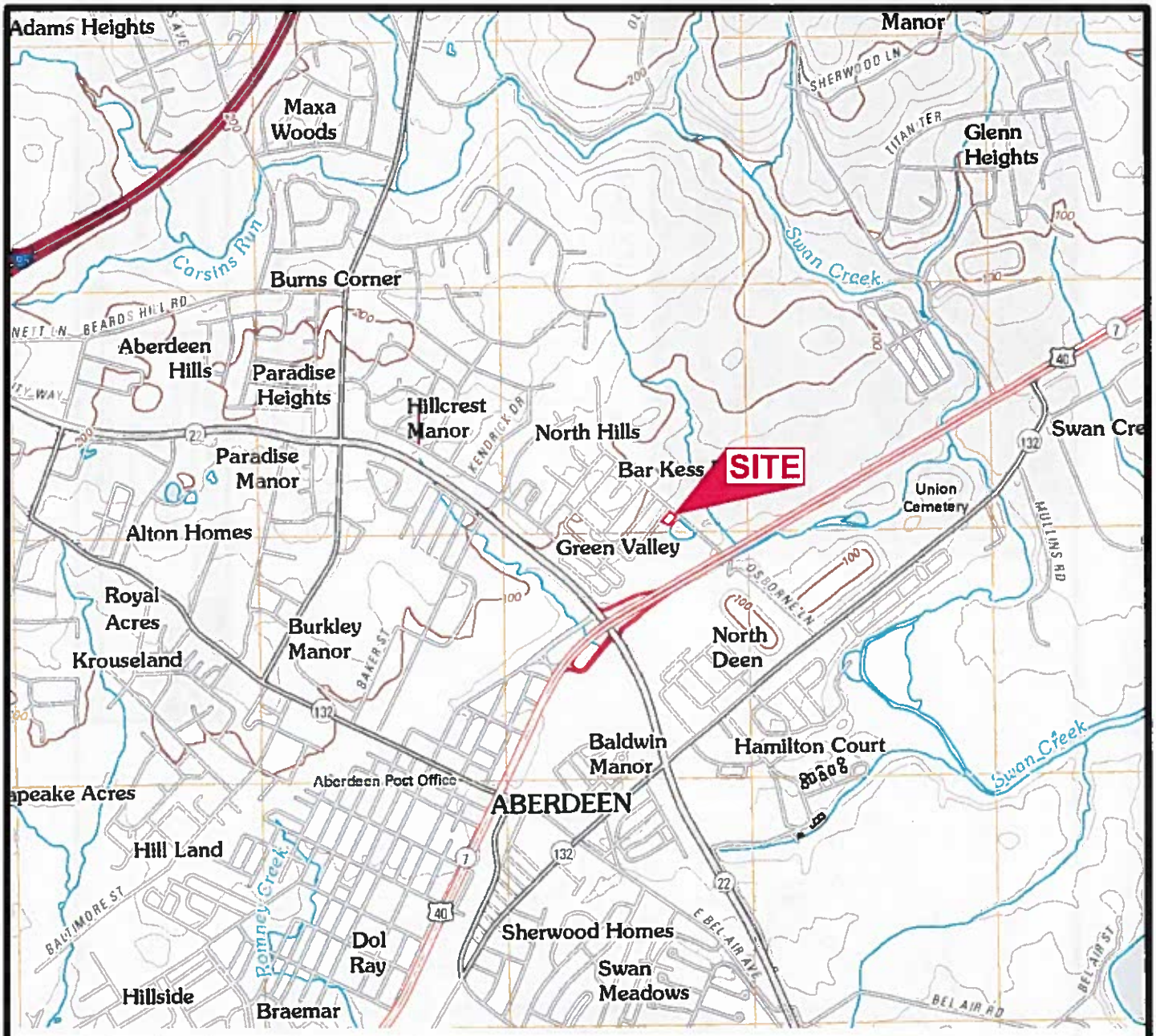

SOURCE: BASE PLAN ADAPTED FROM THE 2011 USGS TOPOGRAPHIC QUADRANGLE FOR ABERDEEN, MARYLAND

LEGEND

SITE LOCATION

N

0' 500' 1,000' 2,000' 4,000'

SCALE: 1"=2,000'

GEO-TECHNOLOGY ASSOCIATES, INC.
GEOTECHNICAL AND ENVIRONMENTAL CONSULTANTS
3445-A BOX HILL CORPORATE CENTER DRIVE
ABINGDON, MARYLAND 21009
410-515-9446
WWW.GTAENG.COM

© 2021 GEO-TECHNOLOGY ASSOCIATES, INC.

USGS TOPOGRAPHIC MAP

RAILBIRD ALLEY WATER BOOSTER PUMP STATION

HARFORD COUNTY, MARYLAND

JOB NO	31210060	SCALE:	1"=2,000'	DATE:	JULY 2021	DRAWN BY:	RCW	REVIEW BY:	TMW	FIGURE:	2

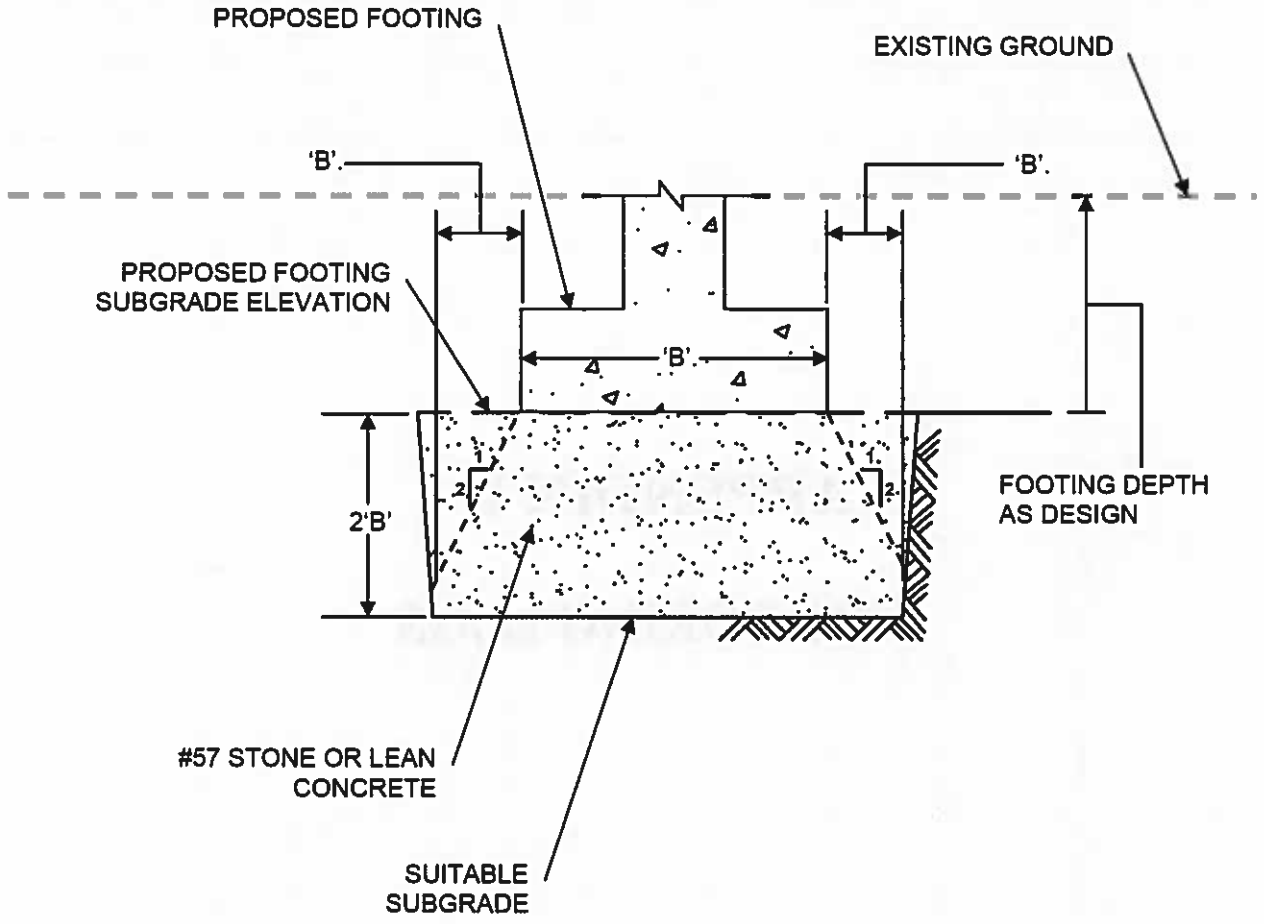

NOTE: SLOPE OF THE EXCAVATION SHOULD BE A MINIMUM OF1 HORIZONTAL TO 1 VERTICAL (1:1)

GEO-TECHNOLOGY ASSOCIATES, INC.
GEOTECHNICAL AND ENVIRONMENTAL CONSULTANTS
3445-A BOX HILL CORPORATE CENTER DRIVE
ABINGDON, MARYLAND 21009
410-515-9446

FOOTING SUBGRADE MODIFICATION DETAIL

RAILBIRD ALLEY WATER BOOSTER PUMP STATION

HARFORD COUNTY, MARYLAND

JOB NO.	SCALE:	DATE:	DRAWN BY:	REVIEW BY:	FIGURE:
31210060	NTS	JULY 2021	RCW	TMW	3

APPENDIX B

SOIL BORING LOGS

NOTES FOR EXPLORATION LOGS

KEY TO USCS TERMINOLOGY AND GRAPHIC SYMBOLS

MAJOR DIVISIONS (BASED UPON ASTM D 2488)				SYMBOLS GRAPHIC	SYMBOLS LETTER
COARSE-GRAINED SOILS MORE THAN 50% OF MATERIAL IS LARGER THAN NO. 200 SIEVE SIZE	GRAVEL AND GRAVELLY SOILS MORE THAN 50% OF COARSE FRACTION RETAINED ON NO. 4 SIEVE	CLEAN GRAVELS (LESS THAN 15% PASSING THE NO. 200 SIEVE)			GW
					GP
		GRAVELS WITH FINES (MORE THAN 15% PASSING THE NO. 200 SIEVE)			GM
					GC
	SAND AND SANDY SOILS MORE THAN 50% OF COARSE FRACTION PASSING ON NO. 4 SIEVE	CLEAN SANDS (LESS THAN 15% PASSING THE NO. 200 SIEVE)			SW
					SP
		SANDS WITH FINES (MORE THAN 15% PASSING THE NO. 200 SIEVE)			SM
					SC
FINE-GRAINED SOILS MORE THAN 50% OF MATERIAL IS SMALLER THAN NO. 200 SIEVE SIZE	SILT OR CLAY (<15% RETAINED ON THE NO. 200 SIEVE)		SILTS AND LEAN CLAYS LIQUID LIMIT LESS THAN 50		ML
					CL
	SILT OR CLAY WITH SAND OR GRAVEL (15% TO 30% RETAINED ON THE NO. 200 SIEVE)				OL
	SANDY OR GRAVELLY SILT OR CLAY (>30% RETAINED ON THE NO. 200 SIEVE)		ELASTIC SILTS AND FAT CLAYS LIQUID LIMIT GREATER THAN 50		MH
					CH
					OH
HIGHLY ORGANIC SOILS					PT

NOTE: DUAL SYMBOLS ARE USED TO INDICATE COARSE-GRAINED SOILS WHICH CONTAIN AN ESTIMATED 5 TO 15% FINES BASED ON VISUAL CLASSIFICATION OR BETWEEN 5 AND 12% FINES BASED ON LABORATORY TESTING; AND FINE-GRAINED SOILS WHEN THE PLOT OF LIQUID LIMIT & PLASTICITY INDEX VALUES FALLS IN THE PLASTICITY CHART'S CROSS-HATCHED AREA. FINE-GRAINED SOILS ARE CLASSIFIED AS ORGANIC (OL OR OH) WHEN ENOUGH ORGANIC PARTICLES ARE PRESENT TO INFLUENCE ITS PROPERTIES. LABORATORY TEST RESULTS ARE USED TO SUPPLEMENT SOIL CLASSIFICATION BY THE VISUAL-MANUAL PROCEDURES OF ASTM D 2488.

ADDITIONAL TERMINOLOGY AND GRAPHIC SYMBOLS

	DESCRIPTION		GRAPHIC SYMBOLS
ADDITIONAL DESIGNATIONS	TOPSOIL		
	MAN MADE FILL		
	GLACIAL TILL		
	COBBLES AND BOULDERS		
RESIDUAL SOIL DESIGNATIONS	DESCRIPTION	"N" VALUE	
	HIGHLY WEATHERED ROCK	50 TO 50/1"	
	PARTIALLY WEATHERED ROCK	MORE THAN 50 BLOWS FOR 1" OF PENETRATION OR LESS, AUGER PENETRABLE	

COARSE-GRAINED SOILS (GRAVEL AND SAND)

DESIGNATION	BLOWS PER FOOT (BPF) "N"
VERY LOOSE	0 - 4
LOOSE	5 - 10
MEDIUM DENSE	11 - 30
DENSE	31 - 50
VERY DENSE	>50

NOTE: "N" VALUE DETERMINED AS PER ASTM D 1586

FINE-GRAINED SOILS (SILT AND CLAY)

CONSISTENCY	BPF "N"
VERY SOFT	<2
SOFT	2 - 4
MEDIUM STIFF	5 - 8
STIFF	9 - 15
VERY STIFF	16 - 30
HARD	>30

NOTE: ADDITIONAL DESIGNATIONS TO ADVANCE SAMPLER INDICATED IN BLOW COUNT COLUMN:
WOH = WEIGHT OF HAMMER
WOR = WEIGHT OF ROD(S)

SAMPLE TYPE

DESIGNATION	SYMBOL
SOIL SAMPLE	S-
SHELBY TUBE	U-
ROCK CORE	R-

WATER DESIGNATION

DESCRIPTION	SYMBOL
ENCOUNTERED DURING DRILLING	▽
UPON COMPLETION OF DRILLING	▼
24 HOURS AFTER COMPLETION	▼

NOTE: WATER OBSERVATIONS WERE MADE AT THE TIME INDICATED. POROSITY OF SOIL STRATA, WEATHER CONDITIONS, SITE TOPOGRAPHY, ETC. MAY CAUSE WATER LEVEL CHANGES.

LOG OF BORING NO. B-1

PROJECT: **Railbird Alley Water Booster Pump Station**
PROJECT NO.: **31210060**
PROJECT LOCATION: **Harford County, Maryland**

WATER LEVEL (ft):	1.5	2.8	
DATE:	7/16/21	7/19/21	
CAVED (ft):	6.5	5.2	

DATE STARTED: **7/16/2021**
DATE COMPLETED: **7/16/2021**
DRILLING CONTRACTOR: **Negley's Geotechnical Services**
DRILLER: **Matt Ballew**
DRILLING METHOD: **Hollow-stem auger**
SAMPLING METHOD: **Split-spoon**

WATER ENCOUNTERED DURING DRILLING (ft): **None**
GROUND SURFACE ELEVATION: **70.0**
DATUM: **Topo**
EQUIPMENT: **Acker XLS**
LOGGED BY: **J. Heiland**
CHECKED BY: **R. Winnan**

SAMPLE NUMBER	SAMPLE DEPTH (ft.)	SAMPLE RECOVERY (in.)	SAMPLE BLOWS/6 inches	N (blows/ft.)	ELEVATION (ft.)	DEPTH (ft.)	USCS	GRAPHIC SYMBOL	DESCRIPTION	REMARKS
					70.0	0				
S-1	0.0	22	1-3-4-5	7			CL		Light brown and tan, moist, medium stiff, Sandy Lean CLAY	Topsoil: 1 inch
S-2	2.0	20	5-6-8-10	14					Light brown and gray, moist, stiff, Sandy Lean CLAY	
S-3	4.0	24	3-3-5-5	8					Gray and light brown, moist, medium stiff, Sandy Lean CLAY with rock fragements	
S-4	6.0	24	7-11-10-11	21		6			Gray and orange, moist, very stiff, Sandy Lean CLAY	
S-5	8.0	18	3-1-2-3	3	62.0		MH		Yellow, gray and white, moist, soft, Sandy Elastic SILT	
						12				
S-6	13.0	24	2-4-5-8	9					Greenish yellow and reddish purple, moist, stiff, Sandy Elastic SILT	
						18				
S-7	18.0	24	3-4-5-6	9					Same	
						24				
S-8	23.0	24	8-10-11-11	21					Light green and reddish orange, moist, very stiff, Sandy Elastic SILT	
					42.0					
S-9	28.0	24	15-16-23-24	39			SC		Black and orange, moist, dense, Clayey SAND with rock fragements	
					40.0	30			Boring terminated at 30 feet.	
						36				

NOTES: **Driller reversed the auger in the hole**

GEO-TECHNOLOGY ASSOCIATES, INC.
3445-A Box Hill Corporate Center Drive
Abingdon, MD 21009

LOG OF BORING NO. B-1

APPENDIX C

LABORATORY DATA

Particle Size Distribution Report

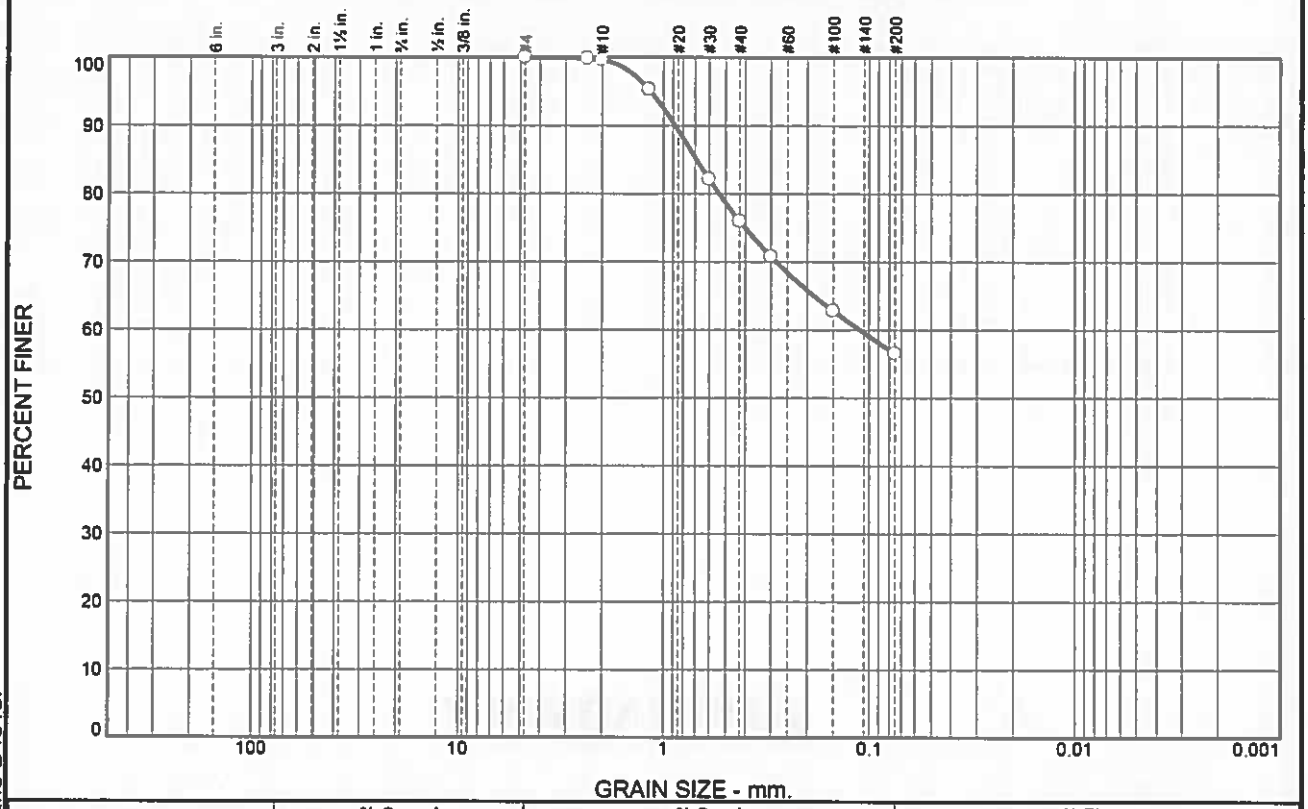

% +3"	% Gravel		% Sand			% Fines	
	Coarse	Fine	Coarse	Medium	Fine	Silt	Clay
0.0	0.0	0.0	0.3	23.8	19.4	56.5	

SIEVE SIZE	PERCENT FINER	SPEC.* PERCENT	PASS? (X=NO)
#4	100.0		
#8	99.9		
#10	99.7		
#16	95.3		
#30	82.1		
#40	75.9		
#50	70.7		
#100	62.8		
#200	56.5		

* (no specification provided)

Soil Description

Yellow, gray and white, Sandy Elastic SILT

Atterberg Limits

PL= 38 LL= 74 PI= 36 NM= 34.5

Coefficients

D_{90}= 0.8779 D_{85}= 0.6908 D_{60}= 0.1114
D_{50}= D_{30}= D_{15}=
D_{10}= C_u= C_c=

Classification

USCS= MH AASHTO= A-7-5(18)

Remarks

Source of Sample: B-1 **Depth:** 8
Sample Number: S-5

Date: 7/16/2021

GEO-TECHNOLOGY ASSOCIATES, INC.
3445-A Box Hill Corporate Center Drive
Abingdon, MD 21009

Client: GHD, Inc.
Project: Railbird Alley Water Booster Pump Station

Project No: 31210060 **Figure**

ASTM Specifications performed my include: D421, D422, D2216, D2217, and D4318.

Tested By: J. Heiland **Checked By:** T. Wirth